Journal of Ambient Intelligence and Humanized Computing
https://doi.org/10.1007/s12652-020-02232-3

ORIGINAL RESEARCH

Monitoring of air pollution to establish optimal less polluted path by utilizing wireless sensor network

K. Preethi[1] · R. Tamilarasan[2]

Received: 15 February 2020 / Accepted: 13 June 2020
© Springer-Verlag GmbH Germany, part of Springer Nature 2020

Abstract
An efficient air pollution monitoring (APM) scheme is proposed to establish an optimal less polluted path using WSN (wireless sensor network), in which the sensor node (SN) senses the temperature and CO gas (carbon monoxide) concentration's existent in the air. Initially, the sensed information from the SNs is preprocessed. During preprocessing, the value that is missed in the sensed information is imputed. Next, Hadoop's distributed file system (HDFS) MapReduce (MR) is implemented on the preprocessed data and subsequently, the resulting data is saved in the cloud server. The resulting data is analyzed using Improved-Adaptive Neuro-Fuzzy Inference System (I-ANFIS) Algorithm for checking air pollutions severities and its location is then presented in the Google Map. After that, the multi-path routing is established through the less polluted area. Lastly, the optimal path is chosen with the assistance of KHOA (Krill Herd Optimization Algorithm). The outcomes are evaluated by contrasting the proposed and prevailing techniques.

Keywords Wireless sensor network · Carbon monoxide · Air pollution · Multi-path routing · Adaptive neuro-fuzzy inference system · Krill herd optimization and MapReduce

1 Introduction

In recent years, it is observed that a gigantic augmentation of automobile vehicles and industries, leading to the decline of air quality (Pavani and Rao 2017). WHO (World Health Organization) reveals that for human health Air pollution is the prime environmental hazard responsible for one death in every nine death annually (Guanochanga et al. 2018a, b). Furthermore, at ground level, the atmospheric pollution diminishes agricultural yields, sunlight, and visibility and elevates atmospheric heating as well. This reaction emphasizes the need for constant APM and fine air quality with an increase in spatial and temporal granularity (Belkhiri et al. 2018). Studies revealed that air pollution exposures are linked with augmented mortality and more incidence of respiratory ailments, namely chronic obstructive pulmonary disease, asthma and also cancer (Bao and Wang 2017). Bad air quality may increase health issues like heart disease, nausea and fatigue, lung cancer, and chronic respiratory diseases (Abraham and Li 2016). To augment the air quality, it is necessary to check the pollutants' sources and air-quality conditions regularly (Bao and Wang 2017).

Air pollution has now become the central risk for human health all over the globe. As per the WHO, the death rate on account of pollution-associated atmospheric diseases is approximately 7million every year (Guanochanga et al. 2018a, b). As per the WHO, air pollution is pondered as the chief environmental health hazard. In 2012 WHO submitted a report which declares about 5million people may die due to air pollutions. The primary reason for this is CO_2 (carbon dioxide), SO_2 (sulfur dioxide), O_3 (ground-level ozone), NO_2 (nitrogen dioxide), CO along with Particulate Matter (PM2.5 and PM10) (Patil et al. 2019). The exposure of air pollution and its concentrations are extensively increased in both indoor as well as outdoor environments. In comparison to urban environments, there is some difference in concentrations at a fine Spatio-temporal scale (Johnston et al. 2018). In our day-to-day life, health is directly inhaled by the air and thus quite necessary to maintain the air quality. The

✉ K. Preethi
kalai.preethi@gmail.com

[1] Department of Computer Science and Engineering, University College of Engineering Pattukkottai, Rajamadam, Thanjavur, India

[2] Department of Chemistry, University College of Engineering Pattukkottai, Rajamadam, Thanjavur, India

Published online: 25 June 2020

plethora of pollutant sources converts air pollution as a critical health concern (Rane et al. 2018).

Air pollution levies grave health effects together with risks for the public, which makes the regular monitoring of air quality as necessary on worldwide. Proper APM is chiefly executed by stationary as well as the routinely calibrated reference (Kizel et al. 2018). Presently, static-monitoring stations are implemented for observing the air pollution degrees which are outfitted with specialized reference equipment. Quality equipment is very huge expensive and heavy (Barcelo-Ordinas et al. 2018). The conventional Air Quality Monitoring stations are employed in restricted, on account of the high maintenance cost, huge size, huge initial investment cost involved and power limitations Pavani (Pavani and Rao 2017). For instance, New South Wales in Australia has only 15 APM sites where each is 10 km away from each other. However, the data as of those monitoring spatial granularity unable to project factual air pollution exposures at any area in New South Wales (Hu et al. 2016).

WSN stands as a unique solution to this issue as they usually comprise low cost and inch scale nodes that can combine sensing, packet formation, wireless transmission and data processing. Consequently, the potentiality of an inexpensive deployed WSN has attracted a big deal of attention (Spachos and Hatzinakos 2015). WSNs encompass SNs which communicate amongst themselves remotely. SNs spread manually or randomly over a region to check environmental conditions depending on the applications (Agarwal et al. 2016). Internet of Things (IOT) and large-scale WSNs are combined and communicate a vast quantity of ecological data that are associated with temperature, humidity and air pollutions (Deligiannis et al. 2017). The improved sensors along with wireless technologies using wearable sensors, a sensor mounted on moving vehicles in the monitoring area or SNs collects real-time air pollution data which provides air pollutant warnings messages and notifications (Patil et al. 2019).

The succeeding sections in this paper are pre-arranged as: Sect. 2 defines the related works. Section 3 describes the proposed mechanism in detail. The section explains the proposed work analyzes and experimental outcomes. Finally, the conclusion part is described in Sect. 5.

2 Literature review

Mahajan et al. (2018) delineated that it was viable to accurately foresee the fine PM2.5 contents through lower time computation using several clustering methodologies. A hybridized model was deployed to make such predictions whereas a centered grid system was utilized for clustering along with reputed monitoring stations grounded in the geographic space. Specific tests and assessments were performed by computing Airbox devices' data as of 557 stations distributed all through Taiwan. A last comparative examination was made with multiple clustering methods in the aspect of accuracy and computation time.

Boubrima et al. (2017) paved attention on a variant approach with an autonomic and low-cost WSNs, having a target of ameliorated Spatio-temporal granularity of sense. Its main contribution was to model the integer linear programming prototypes that introduced sensor deployments that capture the infrastructure 's connectivity and the pollution coverage under disparate weather scenarios. The performance was examined and revealed that the combined coverage and also connectivity formulation was compact and tight, with reasonable execution time.

Laskar et al. (2018) introduced a Functional air-quality index framework, and it acts as a susceptibility indicator to respiratory complaints. Applying the Bayesian neural network, it employes the required locations arbitrary real-time data through wireless communication. The outcomes are taken for testing the framework and compared to CPCB data. At a particular time, the pollutant place is determined graphically which is submitted to WHO's health standard.

Kizel et al. (2018) explored an N2N (node–node) calibration. In this mechanism, a single sensor is regulated directly against the reference measures in all chains. The other sensors are adjusted successively employed one another and collocated in pairs. The N2N calibration observations are executed using '2' study designs. This study collects the nodes data at AQM stations and applied in an urban neighborhood, reproducing an operational WDSN.

Yang et al. (2019) proposed an environmental quality monitoring mechanism based on altering the interior air quality and CO contents along with volatile organic compounds, and formaldehyde. If the environmental value is beyond the standard, then the mechanism determines the substance of harmful gases and automatically air ventilation is activated with purification devices. These instant data enables observed from the areas that enable to take correct decision time to obtain a healthy environment.

Recommended the security architecture, which was centered on Multi-access Edge Computing together with cellular networks to gather sensors' information instantaneously. Their architecture embraced access control, strong authentication along with confidentiality. The system servers were employed in MEC architecture. The gateways of all sensor networks were also linked to a secure Authentication Server. It was suggested to utilize an authentication server to spot the capture of gateways and also revoked certainly compromised gateways.

3 Proposed approach

Air pollution has turned into the main problem due to industrial emissions, traffic jams, increased urbanization, together with heating/cooling of the edifice. In such an environment, it is essential to scrutinize the air pollution. Surveilling systems depend on reference sensing stations that are accurate but leaden, expensive and thus seldom. Here, an optional approach is focused, with a network of low fees and also autonomic wireless sensors (Musa et al. 2019). This manuscript proposes an efficient scrutinization of air pollution to establish an optimal less polluted path using WSN, wherein the SN senses the temperature in addition to the CO gas's concentration existing in the air and establishes an optimal less polluted path. Initially, the sensed information as of the SN is preprocessed. Now, in the preprocessing phase, the value which is missed in the sensed information is attributed. Next, HDFS MapReduce is carried out for the preprocessed data. MR eliminates redundant data and is hoarded on the cloud server. The resulting data is examined using I-ANFIS Algorithm to check the air pollution's severity. The range of severity includes good, unhealthy, moderate, and unhealthy for sensitive people, very sick in addition to hazardous.

The location to the severity ranges is presented in the Google Map. Then, multi-path routing is established through the less polluted area. Finally, the optimum path is chosen with the aid of KHOA. The proposed work is exhibited in Fig. 1.

3.1 Sensor data acquisition

The sensors are utilized to sense the present condition of pollution in the air. Sensors are hardware devices that generate a measurable reaction to even a change in a physical state of air pollution. The sensor network encompasses independent sensors that spatially distributed to scrutinize environmental and physical conditions, say motion, pressure, vibration, temperature, pollutants, etc. SN measures the airborne pollutants' concentration and also sends the attained data to the server. There are disparate kinds of sensors from which one can select the suitable & appropriate sensor relying on the application.

The wireless SN intended for WSN for industrial applications is the comprehension of the embedded system. A draft of the SN developed for industrial environmental parameter monitoring is displayed in Fig. 2. As revealed in Fig. 2, SN is composed of temperature and also gas sensor interfaced to Arduino UNO microcontroller and output devices as LCD and Zigbee module. The Arduino platform has turned rather popular with individuals just starting with electronics. The Arduino differs from previously scheduled circuit boards, on Arduino for loading a new code there is no need of separate hardware.

Unlike most previous scheduled circuit boards, the Arduino doesn't require a separate part of hardware (termed a programmer) for loading new code on the board –just utilize a basic USB cable. Also, the Arduino IDE utilizes a simplified edition of C++, which makes it easy to program.

The Uno stands as the utmost admired boards on the Arduino family. Lastly, Arduino offers a standard forms factor that breaks down the microcontroller's functions to an accessible package.

In the proposed technique, two kinds of SN are used, such as CO Sensor and Temperature Sensor (TS).

3.1.1 Temperature sensor

The TS senses the temperature, besides, it communicates the data with the server. The TS used here is DHT 22. The DHT composed 2 parts, (1) capacitive humidity sensors, (2) thermistor. There is a very fundamental chip within which do some analog to digital conversions, also, give digital signals with the humidity along with the temperature. This signal is quite simple to read, utilizing any micro-controller. DHT22 digital signal optimized output. It employs

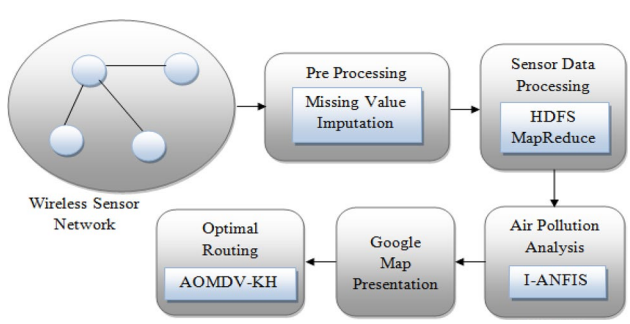

Fig. 1 The proposed framework

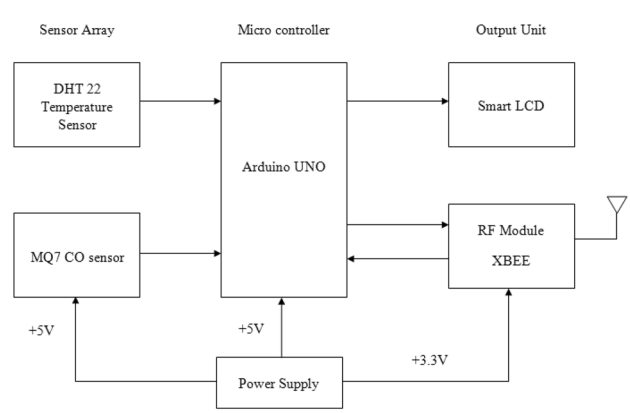

Fig. 2 Schematic diagram of smart SN for industrial environmental parameter monitoring

digital-signal-collecting-method together with humidity sensing technology, making sure its trustworthiness along with stableness. Its sensing components are linked to the 8-bit single-chip computer. All sensors which are calibrated on accurate calibrations chamber are temperature compensated. Additionally, calibration-coefficient is stored in OTP memory as a sort of program. When the sensor begins detecting, the cites co-efficient are stored in the memory. The factors like small size, low consumption, long-distance transmission (20 m) make DHT22 well-applicable for the applications. The presence of single-row packed with 4 pins makes the connection perfect.

3.1.2 CO sensor

The CO sensor senses the CO gas and communicates the data with the server. The CO sensor employed in the proposed technique is MQ 7. The CO sensor is easy to implement according to the CO concentrations on the air. MQ-7 has the sensing ability of CO-gas concentrations anywhere as of 20–2000 ppm. The result with high sensitive with a quick response. The output sensor is equipped with analog resistance which easily drives the circuit. In the MQ-7 gas sensor, SnO2 is the sensitive material that makes low conductivity on clean air. The high cycling technique with low temperature detects CO even in low temperature (heated with 1.5 V). The sensor conductivity maximizes then simultaneously the gas concentration also maximizes. At higher temperatures (heated with 5.0 V) it cleans the other gases adsorbed during the low temperature. The electro circuit is implemented for converting conductivity changes into an equivalent output gas concentration signal. MQ-7 gas sensor includes advanced awareness to CO. Sensors are used for detecting disparate gases which includes CO. It can be used for multiple applications and available at minimum costs.

3.2 Pre-processing

Generally, the SN senses the information about the temperature and also the CO gas's concentration existing in the air based on the time interval. In some situations, the SN may fail to sense the data at any time interval, which leads to missing of that particular data. This state makes further analysis of sensor data difficult on account of the absence of data in any specific interval. To overcome this difficulty, missing data imputation is done in the pre-processing phase.

3.2.1 Missing data imputation

Imputation merely means replacement of the *missing ones* with estimated values, then examining the complete *data*set as if the *imputed values* were actual observed *values*. The proposed method uses mean imputation for the reason of adding the missed data. *Mean imputation* stands as a technique wherein the missing value in a particular variable is substituted via the available cases. As the mean imputation substitutes all the missing values, the entire dataset could be utilized effectively for further processing.

3.3 Sensor data processing

The pre-processed sensor data is processed via HDFS and Apache Hadoop's MR Framework.

3.3.1 HDFS

After pre-processing, the sensor data that are obtained are constructed in a structured layout using HDFS (Rathore et al. 2017). Apache Hadoop's MR and (HDFS) Hadoop's distributed file system initially valid respectively as of Google's MR along with with Google file systems (GFS) papers. HDFS offers a reliable way of managing big data pools. It as well supports rapid data transfer betwixt nodes. At its onset, it is closely linked with 'MR'. MR is a programmatic frame-work aiming at data processing. In the proposed work, MR employs the removal of redundant sensor data that are obtained based on time.

3.3.2 MapReduce

The Hadoop's mapping or reduction design is a framework with added information or sets which fragment the process into several tiny chunks. The MapReduce applies dissemination methods on the cluster for grouping huge information sets to operate. Hadoop MapReduce stands as a programming archetype at the hub of Apache Hadoop to provide massive scalability over a myriad of Hadoop clusters in merchandise hardware.

The MR model processes big unstructured datasets through a distributed algorithm in the Hadoop cluster. The word MapReduce signifies two separate tasks, Hadoop programs do Map Job in addition to Reduce Job. Map job scales consider datasets as input process them to create key-value pair (KVP). Reduce job consider the Map job's output then KVP and also aggregates it to generate desired outcomes. The map's input along with output and also reduce jobs are hoarded in HDFS. Framework comprises two functions, (1) Map () function, (2) Reduce () function.

3.3.3 Map () Function

Map () function creates an alert on the master node (MN) and divides the input information into several minute subprocesses. These minute processes are done and acknowledgments are sent to MN. In associations, these under-operations are utilized for multiple tries. Here, the input is divided to allocate the

work amongst every map node. Then each data is recognized and mapped to the number one. Therefore, the pairs termed as tuples are generated. The mapping stays the same in every node. Then, these are passed to reduce () function.

3.3.4 Reduce () Function

Reduce () function collects the outputs of sub-operations and combined for making decision-based results incase of large load acknowledgment. The Reducers node processes every tuple so that every pair with [same] key are added up and that count is updated as that particular key's value.

3.4 Air pollution analysis

The processed data is examined utilizing I-ANFIS Algorithm to check the air pollution severity. The range of severity encompasses (a) tidly, (b) rational, (c) toxic for sensitive people, (d) mortal, (e) nonnutritious, (f) hazardous. In the proposed technique, I-ANFIS combines K-Medoid algorithm and ANFIS for air pollution analysis. At first, clustering is performed utilizing the K-Medoid clustering algorithm, and then classification is performed using ANFIS, which in combination, said as I-ANFIS.

3.4.1 K-Medoid clustering algorithm

This algorithm begins with selecting k data items as initial medoids for indicating k clusters. All other substances with the closest medoid are included in the cluster. Next, a new medoid is discovered which indicates cluster enhanced. In the clusters, the remaining items are allotted with the closest medoid. At every stage, medoids move to a different location. The method minimizes the sum of variance between each data item with its relevant medoids. This process is continued until no medoid changing its positions. The process ends only the other medoids and resultant clusters reach the positions. In the medoids, K Clusters are developed and are grounded. The whole data members positioned in the relevant cluster is centered on the closest medoid. Its steps are proffered below.

Step 1 Let $C = \{C_1, C_{2,} \dots, C_j, \dots, C_8\}$ be the set of cluster heads (CH).

Step 2 All cluster nodes which are nearest to CHs are assigned to get clusters. Then Euclidean distance is implemented for measuring the distance between CHs and other cluster nodes using the Eq. (1)

$$D = \sqrt{(m_1 - n_1)^2 + (m_2 - n_2)^2} \tag{1}$$

where (m_1, n_1) and (m_2, n_2) are the coordinates of CH and cluster nodes. Determines the total of distances from all cluster nodes to the CHS.

Step 3 Next, the cluster node C_{random} is selected randomly to replace CH node C_j, with the condition that the random node's residual energy will be higher than the average of that of all nodes.

Step 4 Next the cluster nodes to the nearest new CH are assigned and a new clustering result is obtained. Then the Euclidean distance of CHs is calculated with other nodes using the Eq. (1). Then the total of distances for all cluster nodes to the CHs is calculated.

Step 5 If the total of distances is equivalent to the former total, then terminate the algorithm. Or, go back to Step 3.

3.4.2 I-ANFIS

ANFIS represents the fuzzy model with an adaptive framework's structure (Chandar 2019). This mechanism enables enhanced learning with adaptation. This architecture enhances the ANFIS model more systematic with specialist knowledge (Ravi and Balakrishnan 2012). The I-ANFIS structure consists of five layers. In the 5 layers, the layer-1 with the layer-4 has adaptive nodes where the layer-5, layer-2 and also layer-3 hold fixed nodes. Using I-ANFIS, image classification can be done accurately. The below equations represents 2′ basic rules of I-ANFIS;

Rule I If d is R_i and g is S_i then,

$$k_i = p_i D_i + q_i D_{i+1} + r_i \tag{2}$$

Rule II If d is R_{i+1} and g is S_{i+1} then,

$$k_{i+1} = p_{i+1} D_i + q_{i+1} D_{i+1} + r_{i+1} \tag{3}$$

where R_i,S_i,R_{i+1} and S_{i+1} indicates fuzzy sets. The D_i and D_{i+1} values signify the disparate features that are extorted in the proposed system. The values of p_i,q_i,r_i,p_{i+1},q_{i+1} and r_{i+1} are the parameter set. The ANFIS structure is delineated in detail utilizing Fig. 3.

The I-ANFIS classifier's design illustrated in the 5 layers is demonstrated as below,

Layer-1 In which every node are custom-made according to its functional parameter. Each node's output depicts the membership value stated by MF's (Membership Function) inputs. The MF used in the proposed work is bell MF. This demonstration is expressed in the below equations.

$$\mu_{Ri}(D_i) = \frac{1}{1 + \left(D_1 - {}^{c_i}/_{a_i}\right)^{2b_i}} \tag{4}$$

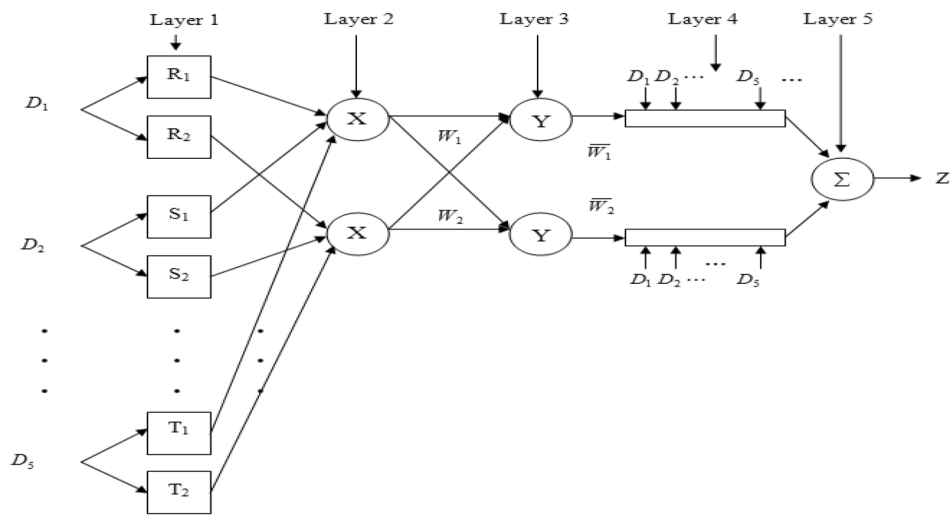

Fig. 3 General structure of ANFIS

where a_i, b_i and also c_i signifies the MFs' parameters that can alter the MF shape. Here, the parameters are termed as the premise parameters.

Layer 2 All nodes are fixed and X determines the circle node. The output node is equal to the outcome of multiplying the incoming value with delivered value. Every node represents each rule's FS (Firing Strength).

$$G_{2,i} = W_i = \mu_{Ri}(D_i) \times \mu_{Ri}(D_{i+1}) \tag{5}$$

Layer-3 All nodes are fixed and the circle node is indicated by Y. All nodes have the responsibility to measure the ratio between i^{th} rules FS and the total of all the rules' FS. The normalization of FS stated by the obtained outputs. The 3rdlayer's mathematical formulations are described in the following equations.

$$G_{3,i} = \overline{W}_i = \frac{W_i}{W_i}, \quad i = 1, 2 \ldots .6 \tag{6}$$

Layer-4 All nodes are adaptive node to output and the node functions are describes as;

$$G_{4,i} = \overline{W}_i .\ k_i \tag{7}$$

Here, it $\overline{w}_i$ symbolizes the normalized FS from the former layer and k_i denotes the system rule.

Layer-5 Evaluates the overall output via summating all the incoming signals as of the former node. In layer-5, $\sum$ indicates the circle node:

$$G_{5,i} = \sum_i \overline{W}_i k_i \tag{8}$$

Lastly, the I-ANFIS categorizes the severity of air pollution as (a) tidly, (b) rational, (c) toxic for sensitive people, (d) mortal, (e) nonnutritious and (f) hazardous.

3.5 Optimal less polluted path routing

After the identification and the representation of the air polluted areas, efficient and less polluted routes are found with the help of Ad-Hoc On-Demand Multipath Distance Vector and Krill Herd Optimization (AOMDV-KH) protocol. This helps the user to choose the optimal less polluted route to pass through.

3.5.1 AOMDV protocol

The AOMDV is the modification of the protocol termed Ad-Hoc On-Demand Distance Vector (AODV). AOMDV is also a reactive routing protocol which normally utilizes certain characteristics of the pro-active routing protocols. Routes are developed on-demand, only when they are requisite. Nevertheless, once established, a route exists until it is needed or until it fails. The Reactive one (i.e. on-demand) finds a path betwixt the source and destination only when required (if there are data to be sent to the destination).

In the AOMDV protocol, the network is idle until it requires a connection. When a connection is requisite, the network node requests for connection by sending a message. Other AOMDV nodes then forward the message via a temporary link and then the message returns to the requesting node. When such a node gets that message, it gives that message backward via a short-term link to the requesting node. The requesting node starts utilizing the route having the least count of hops via other nodes. When this link fails, a routing error is returned to a transmitting node and then the source node chooses the other saved path in the memory of the nodes which is the quality and the property of the AOMDV.

The algorithm which is followed by the AOMDV is:

Step 1 Read source and destination ids.
Step 2 The source node gives RREQ (request messages) to its adjacent nodes which forwards the messages to other prevailing nodes till the destination is attained.
Step 3 If a node gets an RREQ again, it answers with RREP (reply messages) to signify that it has received RREQ which indicates that node is formerly added to some route for attaining the destination (needy node).
Step 4 Then the destination sends RREP, which gives the path as of source to destination. If the source node does not get RREP until a given predefined time it resends RREQs.
Step 5 The routes are kept in the memory with the aid of Hop count. Many routes are chosen, these routes are the shortest path as of source to destination. The AODVM also keeps routes with longer paths for backup.

This protocol proffers innumerable multi-paths, which are the less polluted routes. Among all those multiple paths, an optimal path is picked with the aid of Krill Herd (KH) Optimization algorithm.

3.5.2 Krill Herd Optimization

KH algorithm stands as a meta-heuristics optimization approach which implies the herding behaviors of krill. The steps in KHOA are illustrated below.

Step 1 Start the algorithm with the initialization of the population and iterations.
Step 2 Compute fitness value from each krill as per the calculated SNR values.
Step 3 Next, the algorithm's main loop begins by first sorting the krill as of the best to the worst krill.
Step 4 After that, the motion updates (1, foraging; 2, induced movement; 3, random diffusion) are calculated for all krill by employing the succeeding equations.

(a) Foraging motion update
The foraging update is done by,

$$S_x(t+1) = V_f \beta_x + \omega_f S_x(t) \tag{9}$$

$$\beta_u = \beta_u^{food} + \beta_u^{best} \tag{10}$$

where V_f indicates krill's foraging speed, β_u^{best}, signifies the 'best solution' of uth krill so far, whereas, ω_f symbolizes an inertia weight.

(b) Induced movement update
The induced movement is related to the density maintenance of the KH and the given each krill is provided by:

$$I_u(t+1) = I_{\max}\alpha_u + \omega_n + I_u(t) \tag{11}$$

$$\alpha_u = \alpha_u^{total} + \alpha_u^{t\arg et} \tag{12}$$

where $I_{\max}$ indicates a maximal induced speed, ω_n signifies an inertia weight, α_u^{total} specifies the local effect the uth krill individual has on its neighbors, whereas,$\alpha_u^{t\arg et}$ symbolizes the 'best solution' of uth krill.

(c) Physical diffusion update
The subsequent motion update is aping the physical diffusion by random activities and is proffered as:

$$D_u(t+1) = D_{\max}\left(\frac{1-i}{i_{\max}}\right)\delta \tag{13}$$

where $D_{\max}$ indicates a maximal diffusion speed, δ specifies the random directional vector in $[-1, 1]$.

Step 5 Grounded on the '3′ pre-mentioned movements use different motion parameters during the time. The x th krill position at interval $t' + \Delta t'$ is labeled by the succeeding equation and it is utilized for determining the krill position.

$$R_u(t' + \Delta t') = R_u(t') + \Delta t' \frac{dR_u}{dt} \tag{14}$$

where $\Delta t'$ indicates the utmost significant constants and it must be adjusted in respect of the provided real-world optimization. Here, by utilizing the above equation, the krill's position in a tree is updated to assess the objective function of krill. In the end, the solution (best krill) is returned.

Step 6 Finally, in the algorithm, the stopping criterion is utilized for the completion of pre-defined function evaluations. If the stopping condition is not attained then the krill population is sorted from best to worst for measuring krill individual positions. It returns the "best solution (krill)" when the condition met. This gives the optimal path. The KHOA is delineated in detail utilizing the pseudocode proffered in Fig. 4.

```
Begin
    (i) Define population size P and iteration T_max
    (ii) Random initialization.
        Set the iteration counter I = 1;
        Initialize the population;
        Set the foraging speed V_f, the maximum diffusion
        speed D_max, and the maximum induced speed I_max.
    (iii) Fitness evaluation.
        Evaluate each krill individual.
    (iv) While T ≺ T_max do
        Sort the population/krill from best to worst.
        for I = 1: P (all krill) do
            Perform the following motion calculation:
                Movement induced by other krill individuals
                Foraging activity
                Physical diffusion
            Update the krill individual position in the search
            space.
            Evaluate each krill individual according to its
            position.
        End for I
        Sort the population/krill from best to worst and find the
        current best.
    T_max = I + 1
    End while
    (vi): Evaluate the krill best solution.
```

Fig. 4 Pseudocode for Krill Herd Optimization

4 Results and discussion

The experimental results for APM utilizing WSN are assessed in this section. The proposed Secured APM utilizing I-ANFIS is implemented in the platform of JAVA.

The details about gas sensor used have been tabulated in Table1

4.1 Google map presentations

The analyzed outcomes based on the severity in the respective locations are presented in the Google map utilizing disparate colors as evinced below.

- **Tidly (AQI ≤ 50)** The outdoor air is safe to breathe in. This is shown in green color.
- **Rational (AQI: 51–100)** Uncommonly, sensitive persons may diminish heavy or prolong outdoor exertion. This is marked in yellow color.
- **Toxic for sensitive groups (AQI: 101–150)** Sensitive people (namely, old people, children, patients (having lung disease, specifically asthma) and outdoor workers) need to minimize heavy or prolong outdoor exertion. This is marked in orange color.
- **Mortal (AQI: 151–200)** Sensitive people must avoid and normal people must reduce heavy or prolong outdoor exertion. This is marked in red color.
- **Nonnutritious (AQI: 201–30)** Sensitive people must avoid all outdoor exertions. Others have to minimize outdoor exertion. This is marked in purple color.
- **Hazardous (AQI ≥ 301)** All people must prevent all outdoor exertions. This is marked in maroon color.

4.2 Sample data set

The day and time wise AQI calculations for Google Map with their remarks are shown in Table 2 and those colors are shown in Fig. 6.

4.3 Optimal Less polluted path find the KH-AOMDV Algorithm

The resulting data is examined using I-ANFIS Algorithm to check the air pollution's severity. The range of severity includes good, unhealthy, moderate, and unhealthy for sensitive people, very sick in addition to hazardous.

The location to the severity ranges is presented in the Google Map. Then, multi-path routing is established through the less polluted area. Finally, the optimum path is chosen

Table 1 Sensor details

Sensor	Gas	Description	Range
MQ7	Carbon monoxide	Desirable for sensing CO concentration in the air. It can detect CO gas concentration in the air. It can detect CO gas concentration anywhere from 20 to 2000 ppm CO is detected by this method Low to high	1–1000 (no hazard) 100–800 (hazard) 800–2000 (high risk)
DHT22	Temperature & humidity	Low cost digital temperature and humitidity sensor and measuring surrounding air	Measuring range − 4 to 125 °C ± 0.5° accuracy

Table 2 Day and time wise AQI calculation

S.NO	AQI	Color	Time	Day	Remark
1	150		0	01	Sensitive
2	100		6	01	Rational
3	500		12	01	Hazardous
4	520		18	01	Hazardous
5	150		0	02	Sensitive
6	400		6	02	Hazardous
7	101		12	02	Sensitive
8	170		18	02	Mortal
9	90		0	03	Rational
10	130		6	03	Sensitive
11	550		12	03	Hazardous

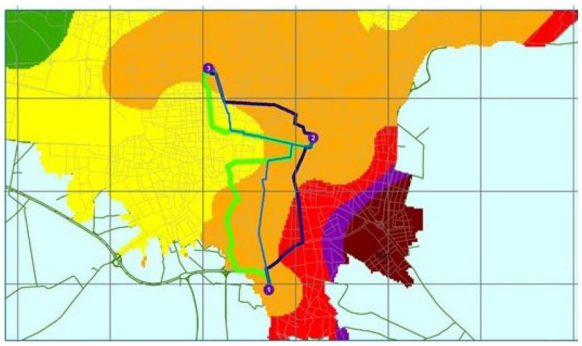

Fig. 5 Optimum pollution path with based on severity ranges and presented in Google Map

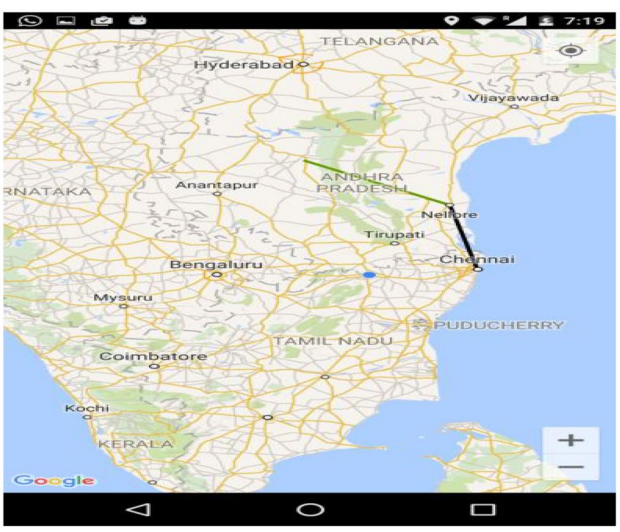

Fig. 6 Non polluted areas marked with lines

with the aid of KHOA. The proposed work is exhibited in Fig. 5.

The severity of the Polluted areas of google map is marked with different colours (Fig. 5) and non Polluted areas are marked with lines (Fig. 6). Krill Herd optimization and Ad-hoc On Demand Distance Vector(KH-AODV) Protocal is helps the user to choose the optimal less polluted route to pass through the google map.

4.4 Performance analysis

The parameters that are utilized for the evaluation of the proposed technique encompass the encryption time, the decryption time and the accuracy. Also, the proposed and the prevailing software centered technique are contrasted for temperature estimation and CO concentration.

Figure 7 shows the graphical representation of the temperature and the CO concentration existent in the air for each node from node 1 to node 5. In all graphs from 6(a) to 6(e), the values of the temperature and the CO are plotted in the graph. The graphs reveal the graveness of air pollution with the varying values of disparate SNs.

Figure 8 analyzes the proposed AOMDV-KH technique with the prevailing routing technique AODV in respect of the delivery ratio. It is inferred from the graph that as the number of nodes (n) increases, the delivery ratio also maximized. For n = 20, 40 and 60, the delivery ratio of the prevailing AODV is too low, but the proposed AOMDV-KH has greater performance when contrasted to the prevailing AODV. For n = 100, the prevailing AODV shows very poor outcomes while the proposed AOMDV-KH has the highest performance.

Figure 9 analyzes the proposed AOMDV-KH technique with the prevailing routing technique AODV with respect to the throughput. It is deduced from the graph that as the number of nodes (n) increases, the throughput also maximize d. Our AOMDV-KH shows excellent performance for n = 80 and 100, in which the throughput is 363,460 and 534,378 respectively. The worst performance for the prevailing AODV is inferred for n = 20, but the proposed technique shows the greater performance than the prevailing one.

Figure 10 compares and analyzes the proposed I-ANFIS with the other prevailing techniques, say SVM (Support

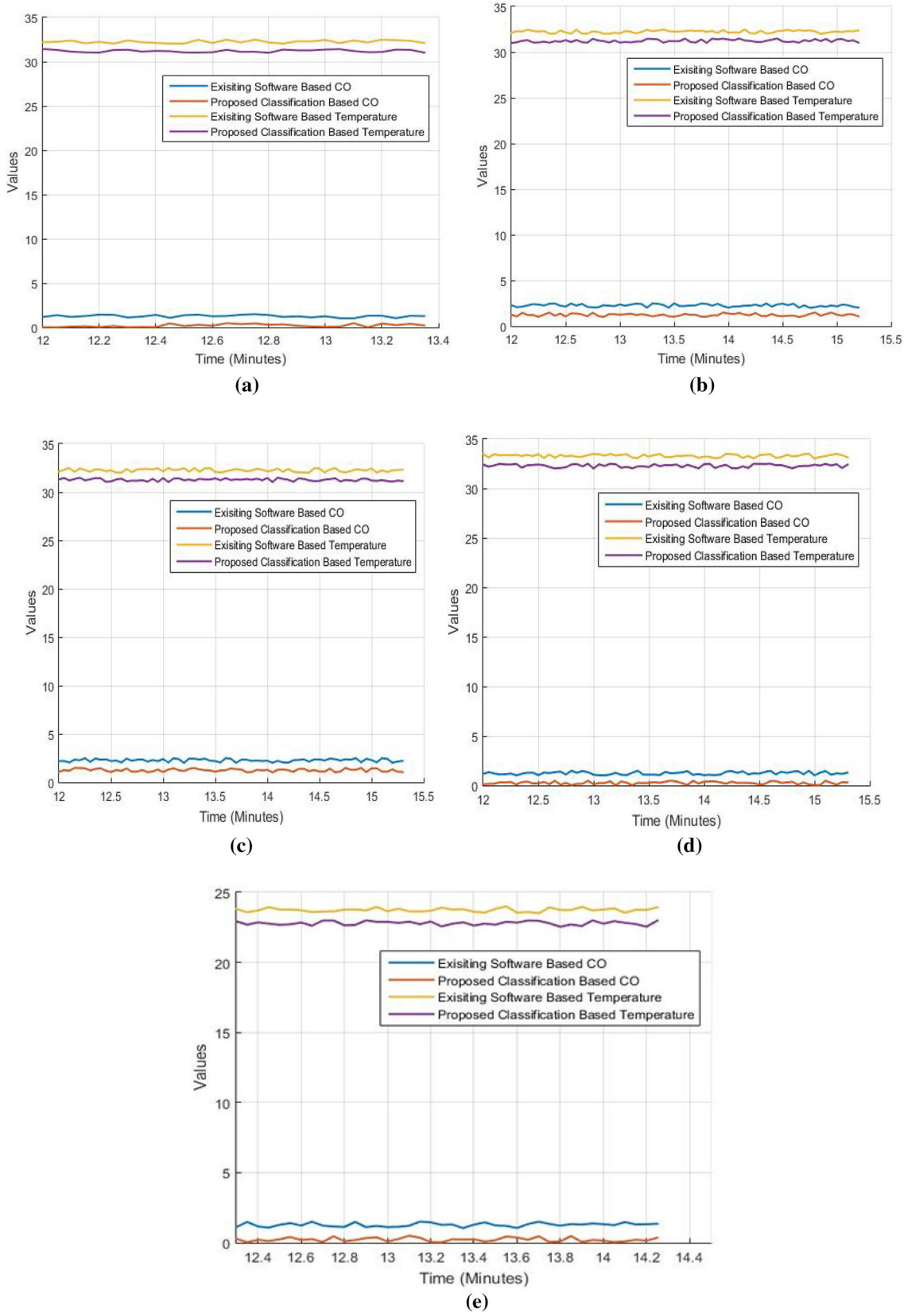

Fig. 7 Concentration of the Parameter Recorded by **a** Node 1, **b** Node 2, **c** Node 3, **d** Node 4 and **e** Node 5

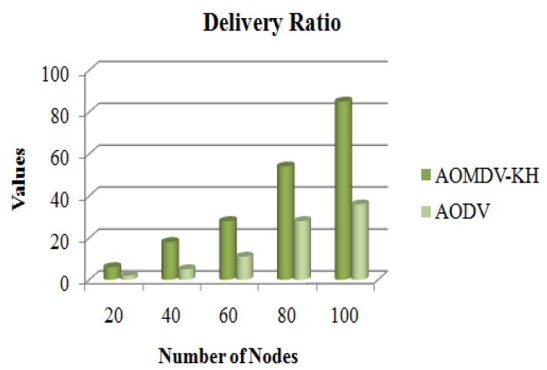

Fig. 8 Comparison of the existing and the proposed technique for delivery ratio

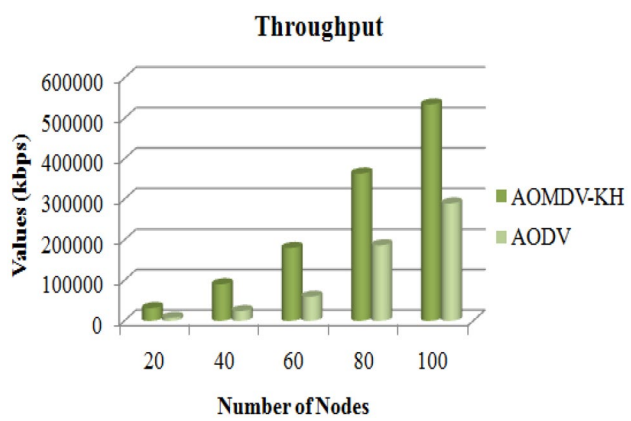

Fig. 9 Comparison of the proposed and the existing technique for throughput

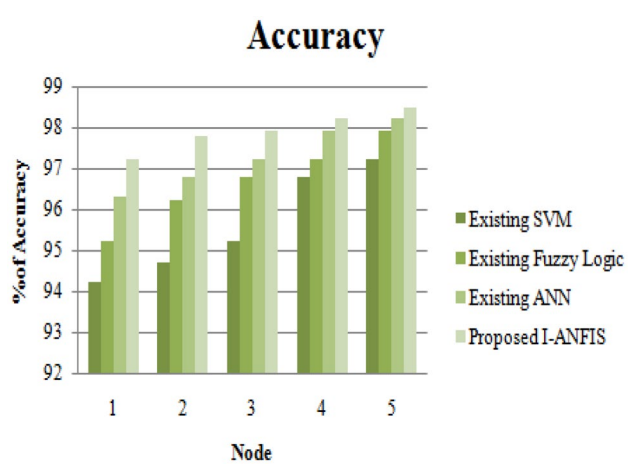

Fig. 10 Comparison of the proposed and the existing technique in terms of accuracy

Vector Machine), Fuzzy Logic together with ANN (Artificial Neural Network) in respect of accuracy. For all the nodes, the prevailing SVM shows a very low performance. For node 3, the prevailing techniques say Fuzzy Logic and ANN have an accuracy of 97.2% and 97.9% respectively. But for node 3, the proposed I-ANFIS has the highest accuracy of about 98.9%. Similarly, for all the nodes, the proposed I-ANFIS shows greater performance.

5 Conclusion

This paper utilizes the WSNs for monitoring air pollution and establishing an optimal less polluted path in the industrial area. An efficient APM utilizing WSN, in which the SN senses the temperature and the CO concentration existent in the air and establishes optimal less polluted path is proposed. Experimental results are assessed by analyzing five disparate SN locations. The proposed technique is contrasted with the prevailing AODV in respect of the delivery ratio and throughput is also contrasted with the prevailing techniques namely, SVM, ANN along with Fuzzy Logic to accuracy. On considering the throughput and delivery ratio, the proposed KH-AOMDV algorithm shows the highest rate, which in turn implies the highest performance. On considering accuracy, the proposed I-ANFIS shows the highest performance. Therefore, these evaluations prove the superior performance of the proposed technique.

References

Abraham S, Li X (2016) Design of a low-cost wireless indoor air quality sensor network system. Int J Wirel Inf Netw 23(1):57–65

Agarwal L, Dixit G, Jain AK, Pandey KK, Khare A (2016) Energy efficient pollution monitoring system using deterministic wireless sensor networks. In: Proceedings of the International congress on information and communication technology, pp 301–309

Bao L, Wang H (2017) Distributed real-time monitoring system for atmospheric particles. IET Wirel Sensor Syst 7(4):91–97

Barcelo-Ordinas JM, Garcia-Vidal J, Doudou M, Rodrigo-Muñoz S, Cerezo-Llavero A (2018) Calibrating low-cost air quality sensors using multiple arrays of sensors. In: IEEE wireless communications and networking conference (WCNC), pp 1–6

Belkhiri A, Bechkit W, Rivano H, Koudil M (2018) Context aware MWSN optimal redeployment strategies for air pollution timely monitoring. In: IEEE international conference on communications (ICC), pp 1–7

Boubrima A, Bechkit W, Rivano H (2017) Optimal WSN deployment models for air pollution monitoring. IEEE Trans Wirel Commun 16(5):2723–2735

Chandar SK (2019) Fusion model of wavelet transform and adaptive neuro fuzzy inference system for stock market prediction. J Ambient Intell Hum Comput 2019:1–9

Deligiannis N, Mota JF, Zimos E, Rodrigues MR (2017) Heterogeneous networked data recovery from compressive measurements using a copula prior. IEEE Trans Commun 65(12):5333–5347

Guanochanga B, Cachipuendo R, Fuertes W, Salvador S, Benítez DS, Toulkeridis T, Meneses F (2018) Real-time air pollution monitoring systems using wireless sensor networks connected in a cloud-computing, wrapped up web services. In: Proceedings of the future technologies conference, pp 171–184

Guanochanga B, Cachipuendo R, Fuertes W, Benítez DS, Toulkeridis T, Torres, J, Meneses, F. (2018) Towards a real-time air pollution monitoring systems implemented using wireless sensor networks: preliminary results. In: IIEEE Colombian conference on communications and computing (COLCOM), pp 1–4

Hu K, Sivaraman V, Bhrugubanda H, Kang S, Rahman A (2016) SVR based dense air pollution estimation model using static and wireless sensor network. IEEE Sensors 2016:1–3

Johnston SJ, Basford PJ, Bulot FM, Apetroaie-Cristea M, Fosterx GL, Loxhamz M, Cox SJ (2018). IoT deployment for city scale air quality monitoring with Low-Power Wide Area Networks. In: 2018 Global Internet of Things Summit (GIoTS), pp 1–6

Kizel F, Etzion Y, Shafran-Nathan R, Levy I, Fishbain B, Bartonova A, Broday DM (2018) Node-to-node field calibration of wireless distributed air pollution sensor network. Environ Pollut 233:900–909

Laskar MR, Chatterjee S, Das A (2018) Design of an integrated system for modeling of functional air quality index integrated with health-GIS using Bayesian neural network. J Indian Soc Rem Sens 46(6):873–883

Mahajan S, Liu HM, Tsai TC, Chen LJ (2018) Improving the accuracy and efficiency of PM2. 5 forecast service using cluster-based hybrid neural network model. IEEE Access 6:19193–19204

Musa A, Gonzalez V, Barragan D (2019) A new strategy to optimize the sensors placement in wireless sensor networks. J Ambient Intell Human Comput 10(4):1389–1399

Patil D, Thanuja TC, Melinamath BC (2019) Air pollution monitoring system using wireless sensor network (WSN). In: Data management, analytics and innovation, pp 391–400

Pavani M, Rao PT (2017) Monitoring real-time urban carbon monoxide (co) emissions using wireless sensor networks. In: International conference on information and communication technology for intelligent systems, pp 290–297

Rane MS, Naik AR, Vachhani K (2018) Real-time AQI monitoring system: an economical approach using wireless sensor network. In: International conference on computing, communication and networking technologies (ICCCNT), pp 1–6

Rathore MM, Paul A, Ahmad A, Anisetti M, Jeon G (2017) Hadoop-based intelligent care system (HICS) analytical approach for big data in IoT. ACM Trans Internet Technol (TOIT) 18(1):1–24

Ravi S, Balakrishnan PA (2012) Development of neuro fuzzy control algorithm in embedded controller for industrial temperature regulation. Arch Des Sci 65(11):708–723

Spachos P, Hatzinakos D (2015) Real-time indoor carbon dioxide monitoring through cognitive wireless sensor networks. IEEE Sens J 16(2):506–514

Yang CT, Chen ST, Chang CH, Den W, Wu CC (2019) Implementation of an environmental quality and harmful gases monitoring system in cloud. J Med Biol Eng 39(4):456–469

Publisher's Note Springer Nature remains neutral with regard to jurisdictional claims in published maps and institutional affiliations.