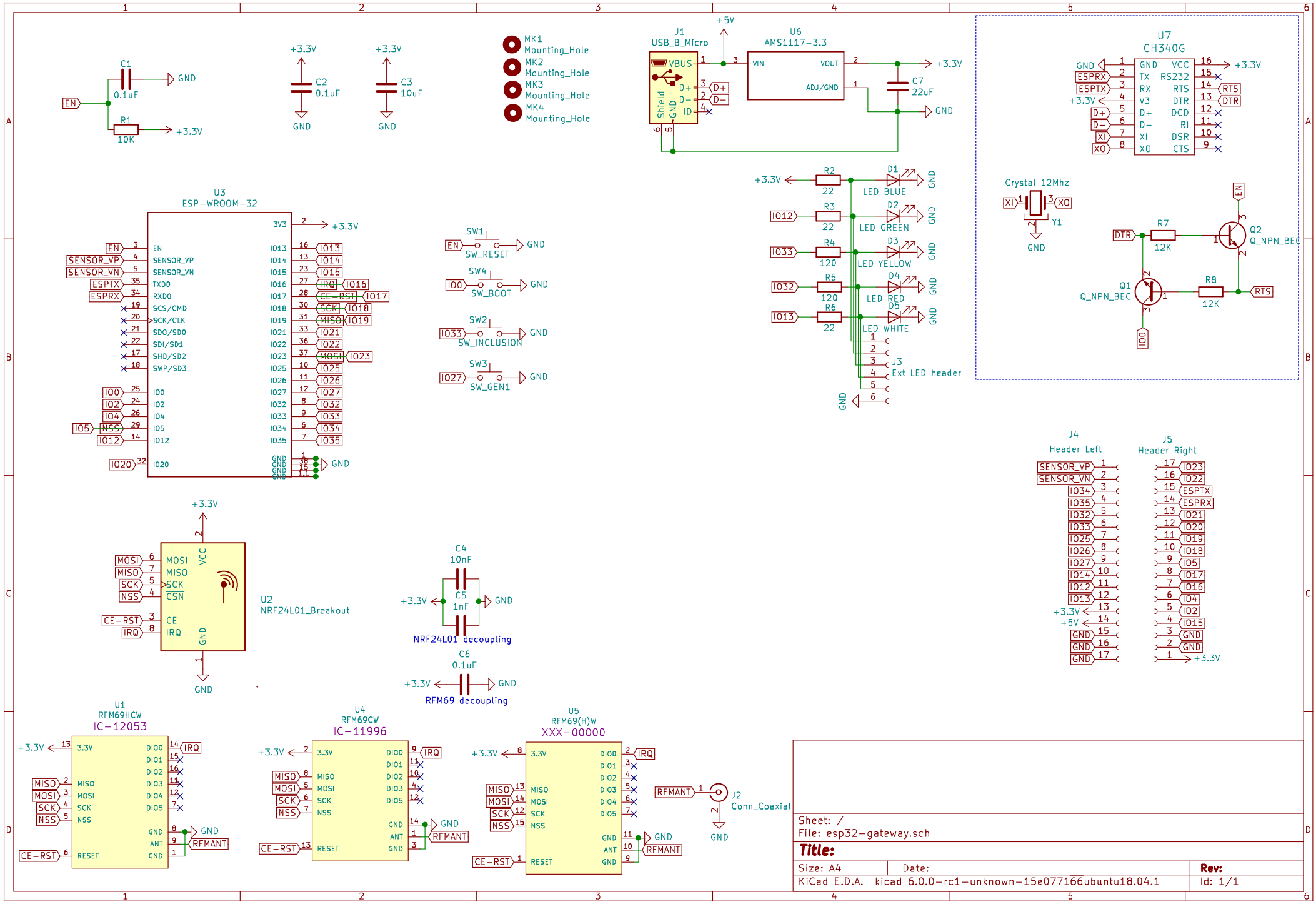

Sheet: /
File: esp32-gateway.sch

Title:

Size: A4	Date:	Rev:
KiCad E.D.A. kicad 6.0.0-rc1-unknown-15e077166ubuntu18.04.1		Id: 1/1