REVISION RECORD			
LTR	ECO NO:	APPROVED:	DATE:

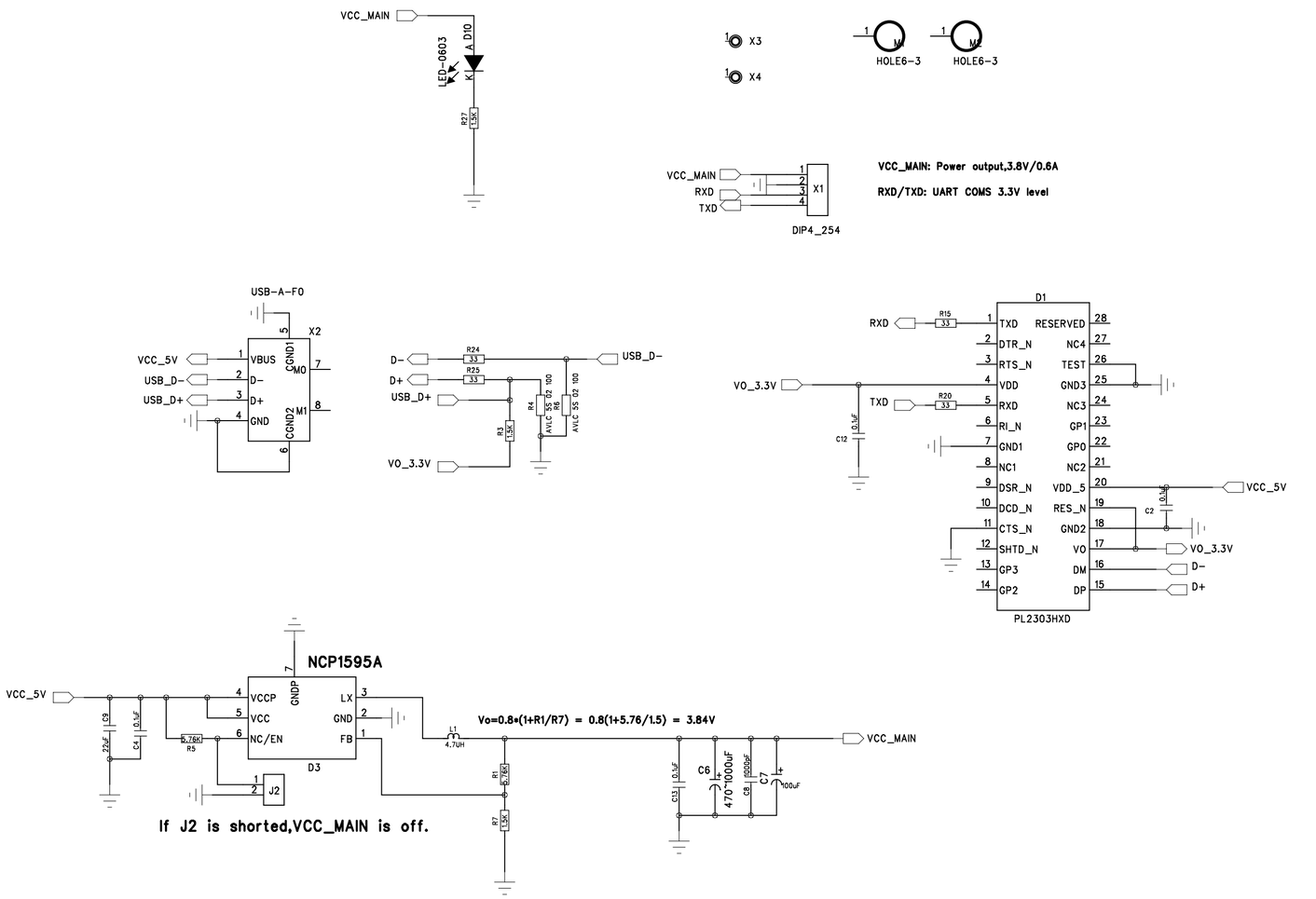

DRAWN:	DATED: 2010-01-28	COMPANY: NEOWAY		
		TITLE: M5x0 PWR		
CHECKED:	DATED:	CODE:	SIZE:	DRAWING NO: 1	REV: V1.0
QUALITY CONTROL:	DATED:			
RELEASED:	DATED:	SCALE:	SHEET: 1 OF 1	