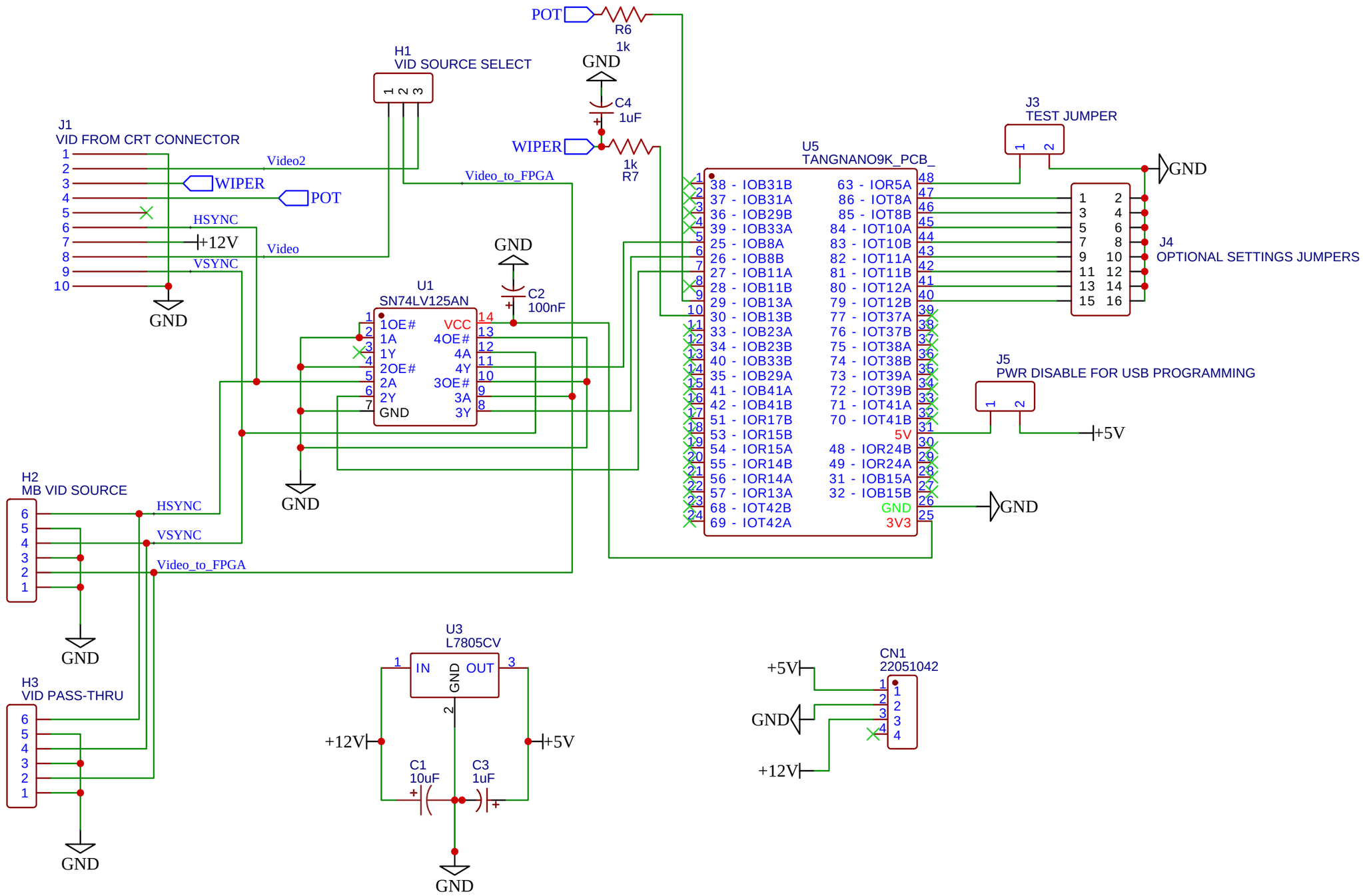

TITLE: TRS-80 Display Adapter	REV: 1.0
Company: www.jaycrutti.com	Sheet: 1/1
Date: 2024-02-12 Drawn By: Jay Crutti	