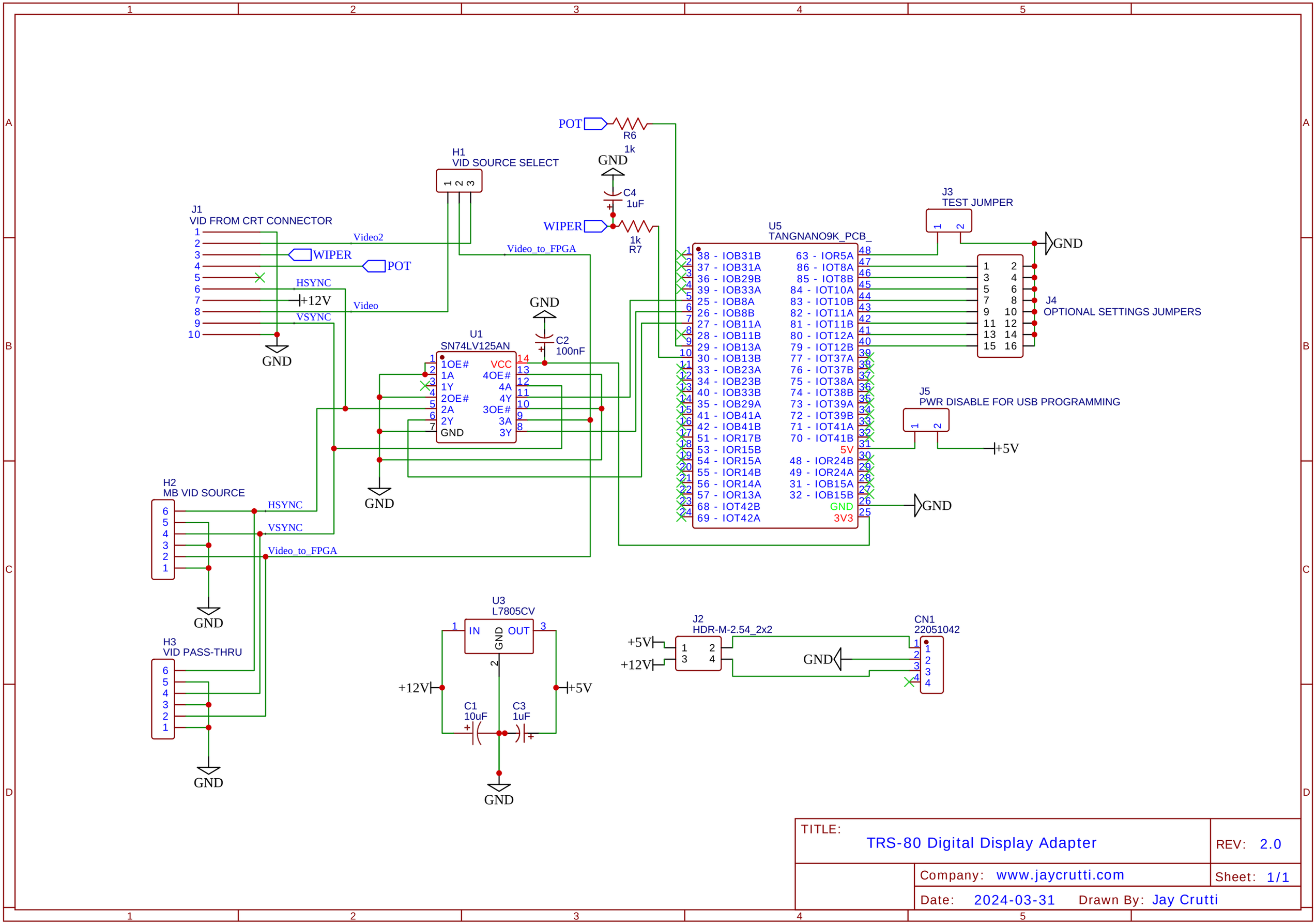

TITLE: TRS-80 Digital Display Adapter	REV: 2.0
Company: www.jaycrutti.com	Sheet: 1/1
Date: 2024-03-31 Drawn By: Jay Crutti	