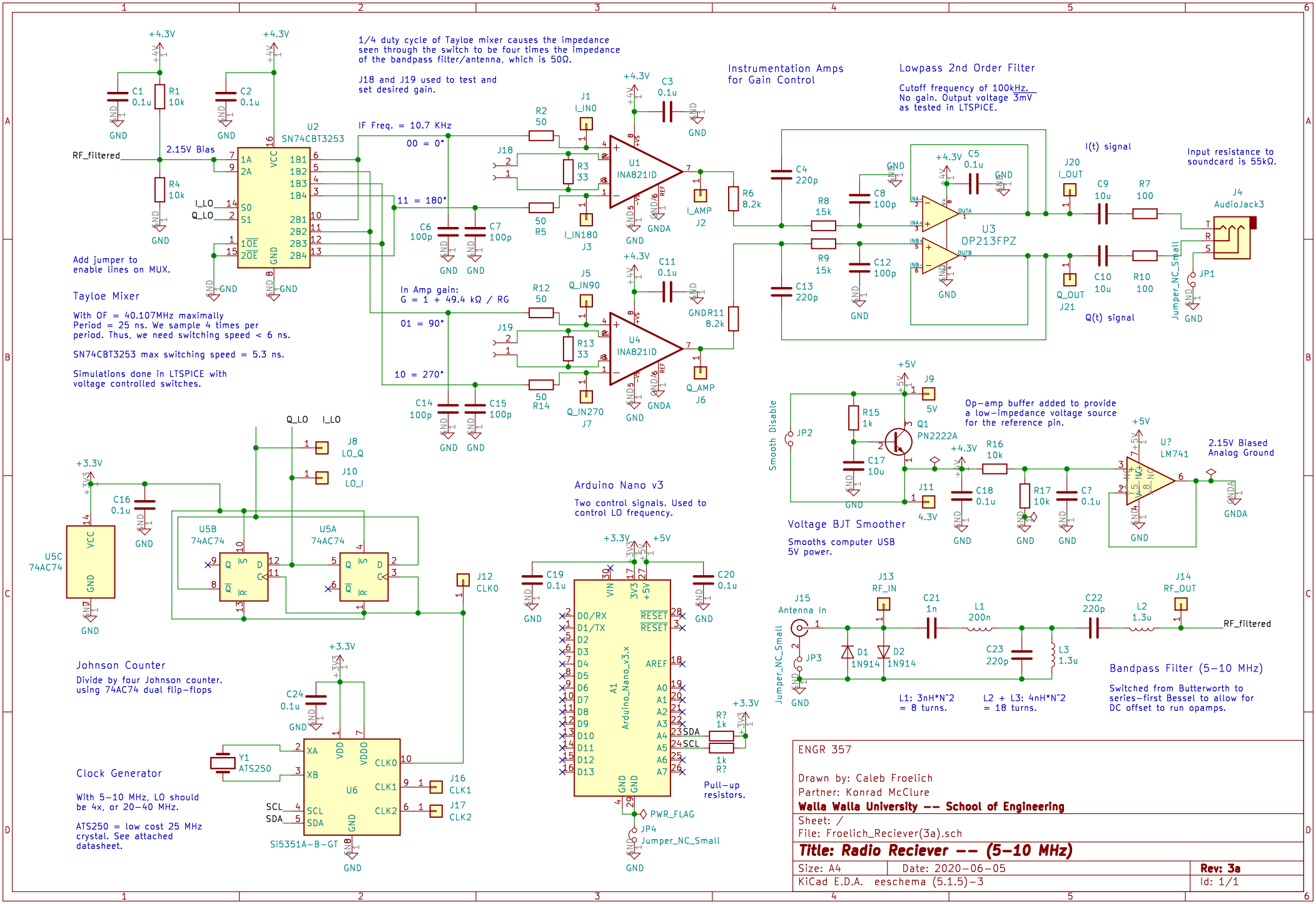
1/4 duty cycle of Tayloe mixer causes the impedance seen through the switch to be four times the impedance of the bandpass filter/antenna, which is 50Ω.
J18 and J19 used to test and set desired gain.
IF Freq. = 10.7 KHz
00 = 0°
11 = 180°
01 = 90°
10 = 270°
2.15V Bias
RF_filtered
U2 SN74CBT3253
Add jumper to enable lines on MUX.
Tayloe Mixer
With OF = 40.107MHz maximally Period = 25 ns. We sample 4 times per period. Thus, we need switching speed < 6 ns.
SN74CBT3253 max switching speed = 5.3 ns.
Simulations done in LTSPICE with voltage controlled switches.
In Amp gain: G = 1 + 49.4 kΩ / RG
U1 INA821ID
U4 INA821ID
Instrumentation Amps for Gain Control
Lowpass 2nd Order Filter
Cutoff frequency of 100kHz. No gain. Output voltage 3mV as tested in LTSPICE.
U3 OP213FPZ
I(t) signal
Q(t) signal
Input resistance to soundcard is 55kΩ.
J4 AudioJack3
Smooth Disable
Op-amp buffer added to provide a low-impedance voltage source for the reference pin.
Q1 PN2222A
U? LM741
2.15V Biased Analog Ground
Voltage BJT Smoother
Smooths computer USB 5V power.
Arduino Nano v3
Two control signals. Used to control LO frequency.
Pull-up resistors.
Johnson Counter
Divide by four Johnson counter. using 74AC74 dual flip-flops
U5B 74AC74
U5A 74AC74
U5C 74AC74
Clock Generator
With 5-10 MHz, LO should be 4x, or 20-40 MHz.
ATS250 = low cost 25 MHz crystal. See attached datasheet.
Y1 ATS250
Si5351A-B-GT
Antenna In
Bandpass Filter (5-10 MHz)
Switched from Butterworth to series-first Bessel to allow for DC offset to run opamps.
L1: 3nH*N^2 = 8 turns.
L2 + L3: 4nH*N^2 = 18 turns.
ENGR 357
Drawn by: Caleb Froelich
Partner: Konrad McClure
Walla Walla University -- School of Engineering
Sheet: /
File: Froelich_Reciever(3a).sch
Title: Radio Reciever -- (5-10 MHz)
Size: A4
Date: 2020-06-05
Rev: 3a
KiCad E.D.A. eeschema (5.1.5)-3
Id: 1/1