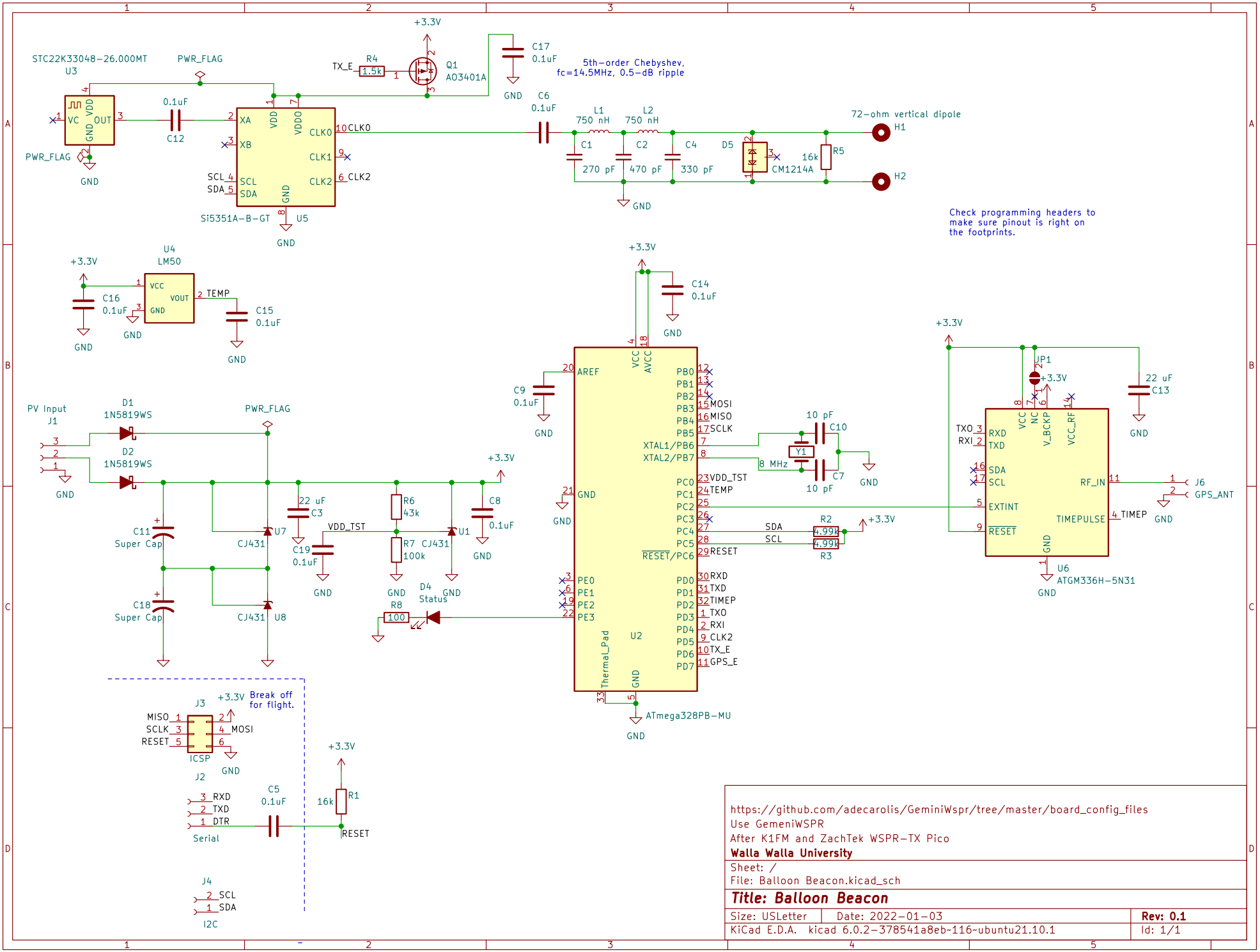

https://github.com/adecarolis/GemeniWspr/tree/master/board_config_files
Use GemeniWSPR
After K1FM and ZachTek WSPR-TX Pico
Walla Walla University

Sheet: /
File: Balloon Beacon.kicad_sch

Title: Balloon Beacon

Size: USLetter	Date: 2022-01-03	**Rev: 0.1**
KiCad E.D.A. kicad 6.0.2-378541a8eb-116-ubuntu21.10.1		Id: 1/1