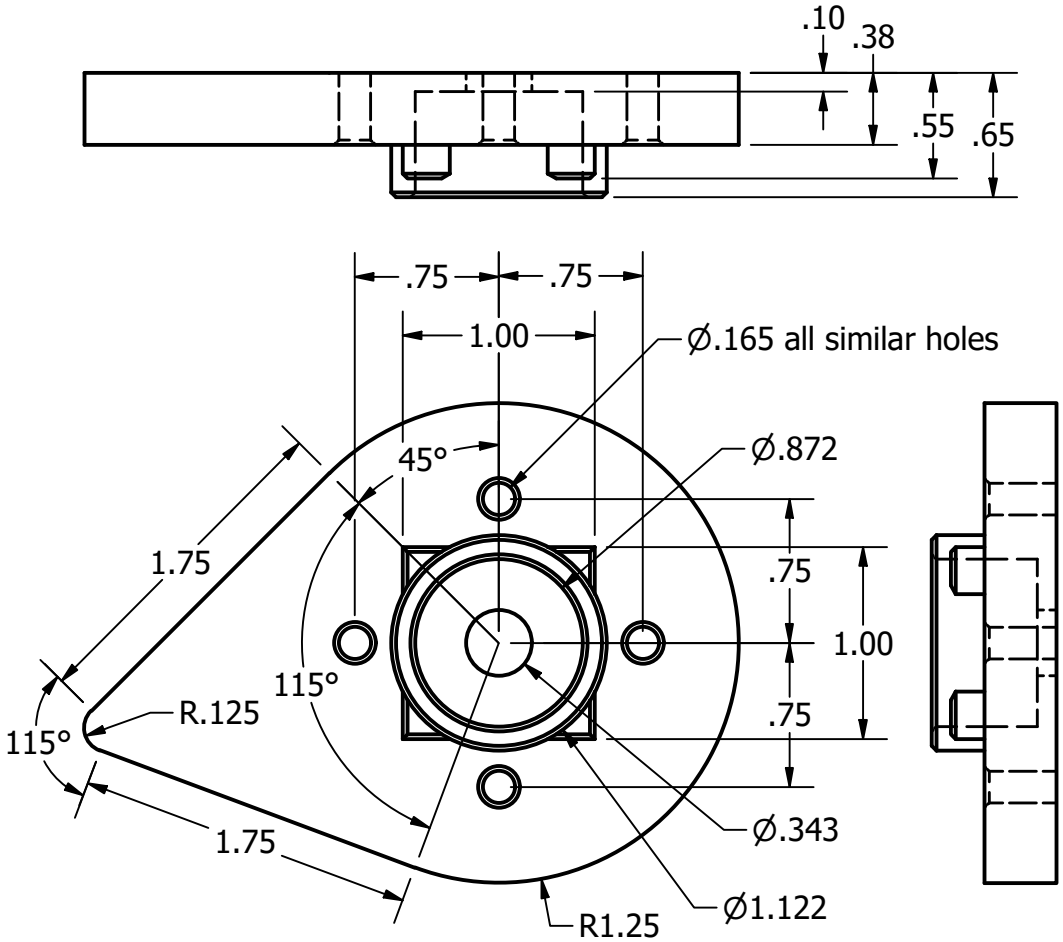

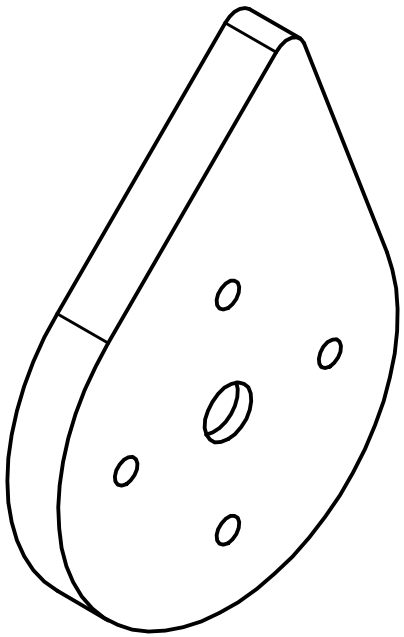

All chamfer 0.025" x 45 degrees

ILLINOIS INSTITUTE OF TECHNOLOGY

TITLE		
UNITS in	DWG NO WeightBearingMount	REV
DRAWN Brandon	SHEET 1 OF 1	