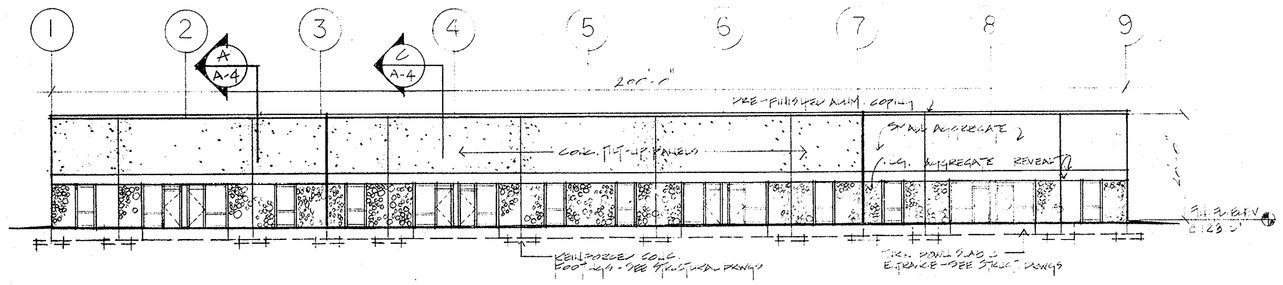

NORTH ELEVATION

SCALE: 1/16" = 1'-0"

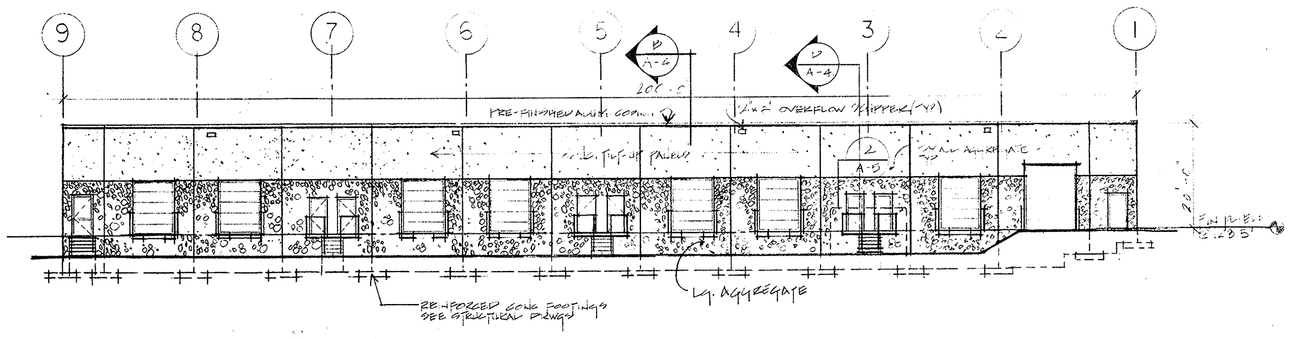

SOUTH ELEVATION

SCALE: 1/16" = 1'-0"

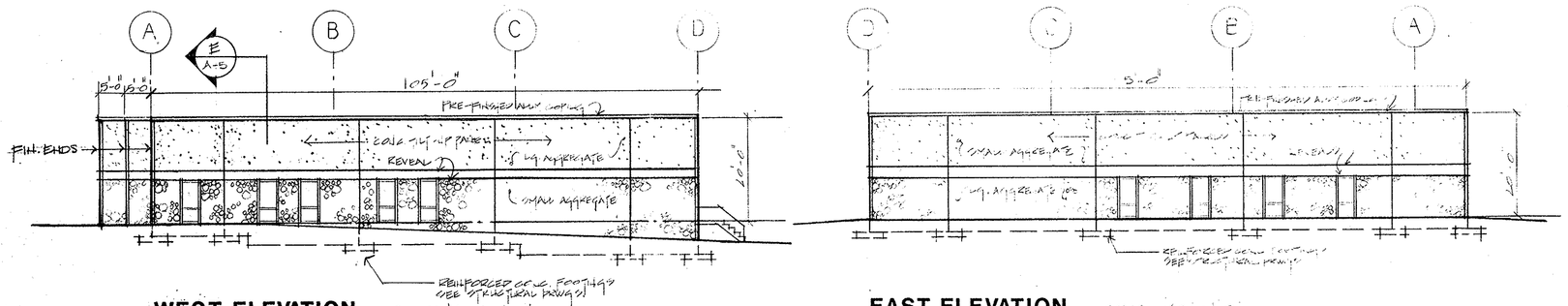

WEST ELEVATION

SCALE: 1/16" = 1'-0"

EAST ELEVATION

SCALE: 1/16" = 1'-0"

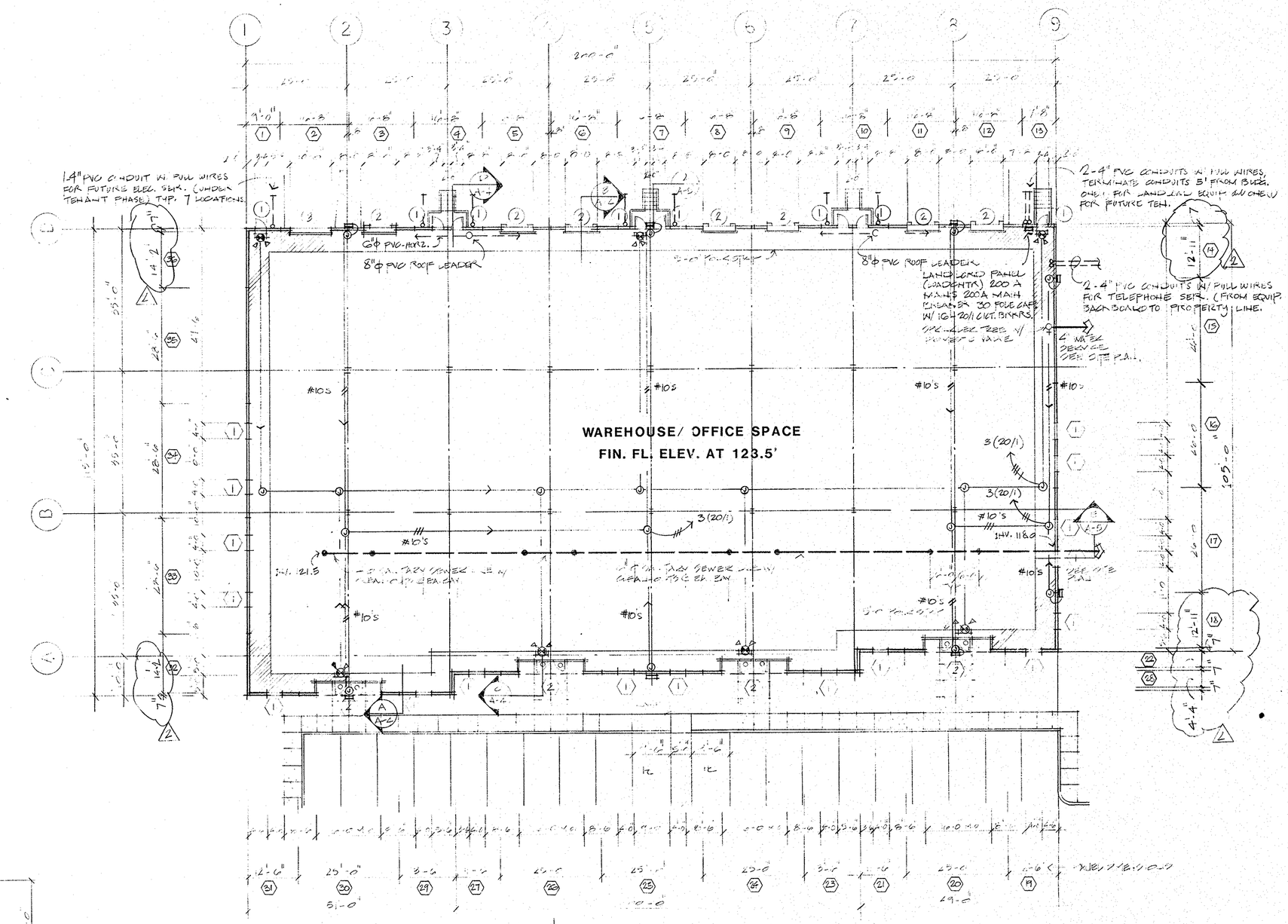

FLOOR PLAN - BUILDING A

SCALE: 1/16" = 1'-0"

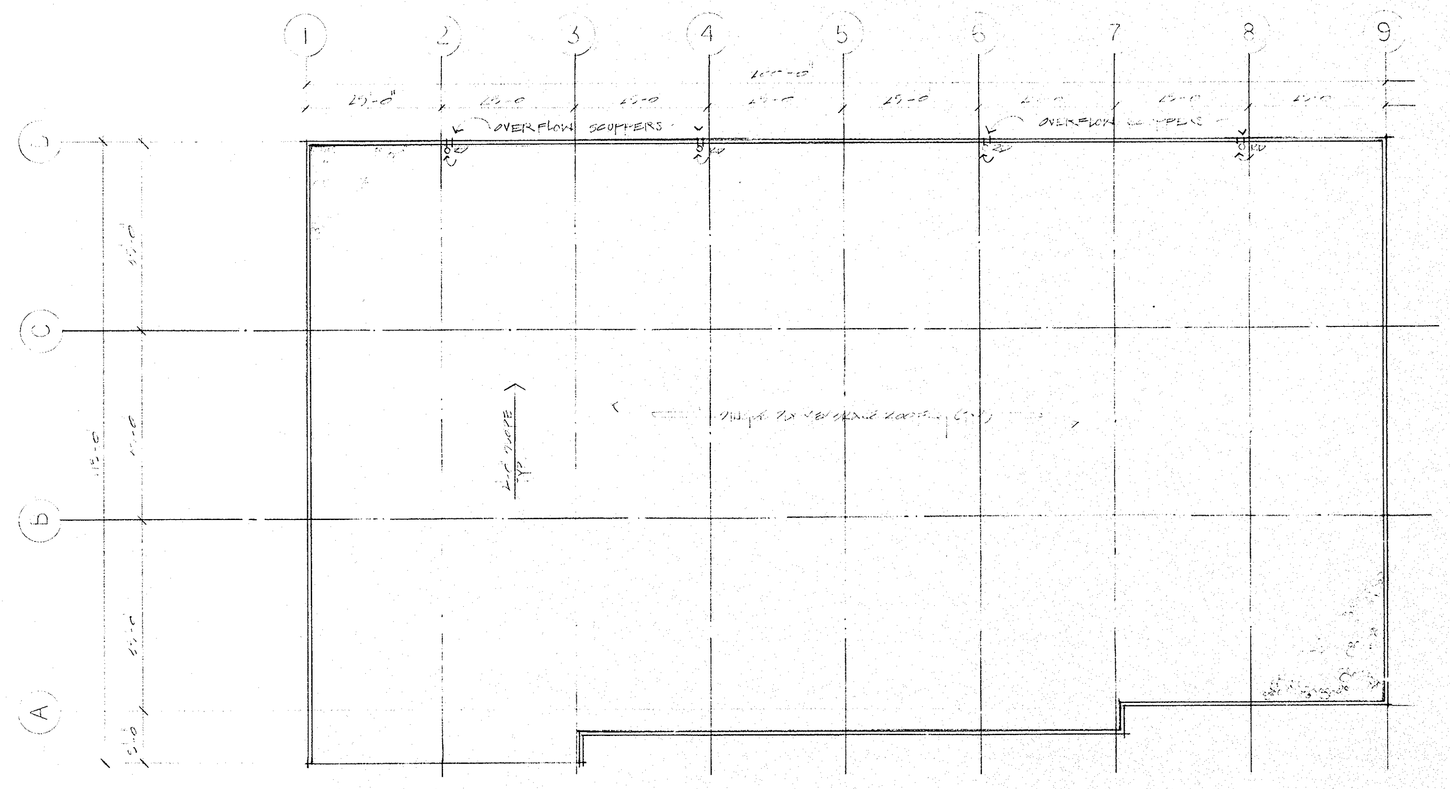

ROOF PLAN - BUILDING A

SCALE: 1/16" = 1'-0"

ELECTRICAL INFORMATION

LIGHTING FIXTURE SCHEDULE

TYPE	SYMBOL	FIXTURE DESCRIPTION	VOLT.	LAMPS NO.	LAMPS TYPE	LAMPS WATT	REMARKS
A	○	7 1/2 INCH DIA. RECESSED H.I.D. DOWNLIGHT W/ BLACK BAFFLE AND FROSTED LENS. UL LISTED FOR DAMP LOCATIONS. PRESCALITE LITE BOX SERIES. CAT. NO. MBR-100-HLBS.	120	1	METAL HALIDE	100	OR EQUAL.
B	▭	EXTERIOR H.I.D. WALL PACK W/ DIE-CAST ALUMINUM HOUSING, HINGED BOROSILICATE GLASS DIFFUSER & PHOTO CELL. SIMAR "HM" SERIES. CAT #MHA-400-HMC-120V.	120	1	METAL HALIDE	250	OR EQUAL.
EA	⊗	EXIT SIGN W/ EMERG. LTS. 1W/1W-RED METAL UNIBODY (BLACK FIN.) W/ STENCIL FACE (BRUSHED ALUM.) W/ INTERNAL BATT. & CHARGER. SHADED AREA INDICATES FACE. EMERGI-LITE #B-SE214-RC-120-BAF-(2)EF-9(W).	120/277	1 EA	N.I.T.	9	OR EQUAL.
EB		EMERGENCY BATTERY UNIT (METAL HOUSING). 6 VOLT, SEALE MAINTED W/ TWO 8W HEADS. W/ SEALED MAINT-FREE LEAD CALCIUM BATTERY & W/ CHARGER. EMERGI-LITE #LSM18-2(LA).					

GENERAL NOTES:

1. CO-ORDINATE LOCATIONS AND SIZES WITH ARCHITECTURAL AND MECHANICAL DRAWINGS.
2. UNLESS OTHERWISE NOTED, MOUNTING HEIGHTS ARE TO CENTER LINE OF EQUIPMENT.
3. WHERE APPLICABLE, MOUNTING HEIGHTS SHALL CONFORM TO HANDICAPPED CODE.

- HOMERUN TO PANELBOARD; ARROWS INDICATE NUMBER OF CIRCUITS, SLASHES INDICATE NUMBER OF CONDUCTORS; (CIRCUIT) INDICATES PANEL, NUMBER INDICATES CIRCUIT.
- CONCEALED BRANCH CIRCUIT, WIRING RUN IN WALLS OR ABOVE CEILING.
- CONCEALED BRANCH CIRCUIT, WIRING RUN WITHIN OR UNDER FLOOR.
- BRANCH CIRCUIT IN A GROUP OF TWO OR MORE CIRCUITS.
- 20/3 BRANCH CIRCUIT BREAKER; TRIP/POLES.
- T TELEPHONE CONDUIT.
- DUPLEX RECEPTACLE, SPEC. GRADE, 1 PH, 125V, 20A, NEMA 5-20, GROUNDING TYPE, MTD. 18 INCHES A.F.F. UNLESS NOTED OTHERWISE. HUBBELL #5362 OR EQUAL.
- JUNCTION BOX, OUTLET BOX, OR PULL BOX, SIZE AS REQUIRED.
- TRANSFORMER.
- SAFETY DISC. SWITCH; FUSED, SIZE PER MFR. MOUNT ON OR ADJACENT TO EQUIP. INSTALL PER EQUIP. INSTALLATION DRAWINGS & NEC.
- UTILITY COMPANY METER.
- PANELBOARD, SURFACE MOUNTED.
- TELEPHONE EQUIPMENT BACKBOARD.

W.P. -- WEATHERPROOF, TO SUIT INTENDED USAGE.

APPLICABLE TO ALL DRAWINGS

1. Drawings shall be considered schematic in nature and shall represent a completed project. Actual installation and methods of achieving a satisfactory and intended installation are the responsibility of the Contractor. Locations of devices are intended to show a general arrangement and intended function. Door swings and architectural features shall be checked for consistancy. Coordinate with all contract documents, owner-provided furniture, equipment drawings, architectural, structural, and mechanical plans and contract specifications. Coordinate with other trades. As drawings are schematic in nature, minor modifications of work to comply shall be provided.
2. Provide electrical service and connection for every fixture, appliance, or item of equipment requiring same; and which is shown on any one of the contract drawings or specified in any section of the contract specifications, unless such connection is specified to be omitted. Refer to mechanical, architectural, site or other drawings and contract specifications. Verify hp & kw ratings of all mechanical and owner furnished equipment.
3. Install every item of equipment in accordance with the manufacturers recommendations. Contractor's responsibility includes installation of equipment to meet manufacturers requirements for guarantee. Provide all accessories required for complete installation for intended use.
4. Comply with all applicable codes. In case of conflict between drawings and specification and interpretation of codes by local authorities, latter shall govern.
5. Provide mechanical support for all items of equipment, long lighting fixtures from building structure, not ceiling structure. Attach hangers to our joist at panel points only.
6. Before installing wiring of electrical equipment, check clearances and avoid interference with mechanical equipment and structure shown on other contract drawings.
7. Coordinate all electrical and protection requirements of actual mechanical equipment supplied prior to installation of circuit to equipment.
8. Exit lightions and emergency lights shall be furnished and installed per NFPA and BOCA Codes.
9. Wire sizes are for THW (minimum #12 AWG) copper unless shown specifically otherwise. Two wire branch circuit wiring within frame walls to switches or receptacles may be type AC (BX) cable, where permitted by Code. Fanblower feeders shall be type THW, THHN, or XHHW within EMT, GRC, or IMC. Exposed wiring in unfinished spaces shall be in metal conduits. Exposed wiring in finished areas shall be in surface metal raceway. Underfloor wiring shall be in threaded IMC. Homerun connections shall be wireconnected inboxes and Scotchlok unbreakers or in damp locations. Branch wiring of lighting fixtures shall be in metal conduits. Drops from metal conduit to individual lighting fixtures may be with AC (BX) cable where permitted by Code. Homeruns of branch circuits shall be in conduit.
10. Homeruns and wiring shall be sized to limit branch circuit voltage drop to 3 percent on branch circuits as per BOCA Energy Code.
11. Mounting heights shall be to center line of equipment unless otherwise noted.
12. Furnish and install weather-resistant, cannon-keyed security padlocks on all disconnect switch handles and hasps, where located outdoors or where accessible to the general public. Furnish & install additional locks where required.
13. All equipment or materials for any one system shall be furnished by the same manufacturer. Such items as lamps, conduit fittings, wire, wiring devices, etc. shall be the same throughout the project.

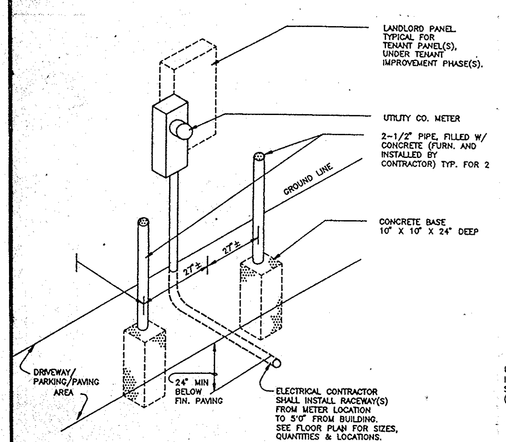

2/E5 Meter Protection Detail

NOT TO SCALE

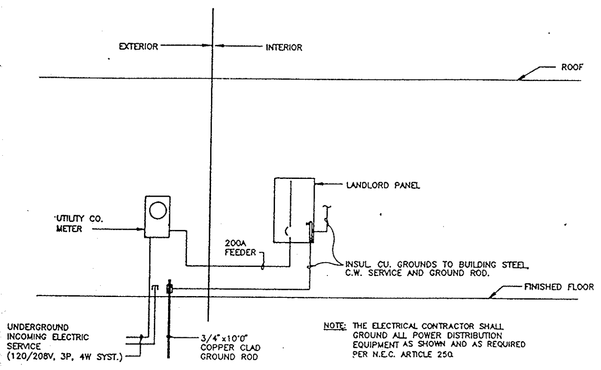

1/E5 Power Distribution Riser Diagram

NOT TO SCALE

REVISIONS

#	date	description
1	11-6-91	CEIL. INFO./ELEC. ETC.
2	5-22-92	PARTIAL TENANTS

THE PLANS FOR THIS PROPOSED BUILDING OR STRUCTURE WERE PREPARED BY OR UNDER MY SUPERVISION, AND TO THE BEST OF MY KNOWLEDGE, INFORMATION AND BELIEF, COMPLY WITH THE REQUIREMENTS OF THE BUILDING CODE OF BALTIMORE CITY, AND THAT I HEREBY ASSUME THE RESPONSIBILITY FOR ITS DESIGN AND THE PERIODIC OBSERVATION OF ITS CONSTRUCTION AS REQUIRED BY CODE.

Registered Professional (Architect, Engineer or Contractor) Reg. No. Seal

GENERAL SPECIFICATIONS

1. Contractor and any sub-contractor having submitted proposal for his work shall be held to having clear and complete understanding of requirements for his work under the contract.
2. Contractors are responsible and shall be held responsible for safety of site, persons, workmen, etc., the public, and public property against injury or damage of any type, from any cause, until final acceptance of project by owner in every instance, to fully protect his interests and those of owner.
3. All contractors shall check and verify all dimensions and conditions at the job site before starting the work.
4. All work shall conform to local building codes and regulations and shall be installed according to the joint requirements and decisions of all local authorities.
5. Contractor shall not knowingly perform any work contrary to the local building code and ordinances, rules and regulations and without such notice to the owner, he shall bear all costs arising therefrom.

General Notes Pertaining to Building:

1. All work shall comply with State and Local Codes and Ordinances including the latest edition in force of the following codes: - BOCA Code, Life Safety Code, BOCA Energy Code, and the MD State Handicapped Code. All work shall be performed according to the joint requirements and decisions of all local authorities.
2. Design Criteria
   Use Group: A-1
   Construction Type: 2-C
   Height: 20'-0"
   Number of Stories: 1
   Gross Area (Sq. Ft.): 21,723
3. Building shall be fully sprinklered as per MD. State Fire Prevention Code Article 38-A.

☐ PRELIMINARY
☐ PRICING
☐ PERMIT
☒ CONSTRUCTION

robert t. hofmann and associates, inc. architects
6501 york road
baltimore, maryland 21212
(301) 377-9100

TRANSIT PARK BUSINESS CENTER
3031 & 3051 WASH. BLVD.
BALTIMORE, MD.

JOHN P. BLUMER - DEVELOPER

BUILDING A: FLOOR PLAN, ELEVATIONS, ROOF PLAN

scale: 1/16" = 1'-0"
date: 05-82
revised: 5/22/89

A-1
sheet of