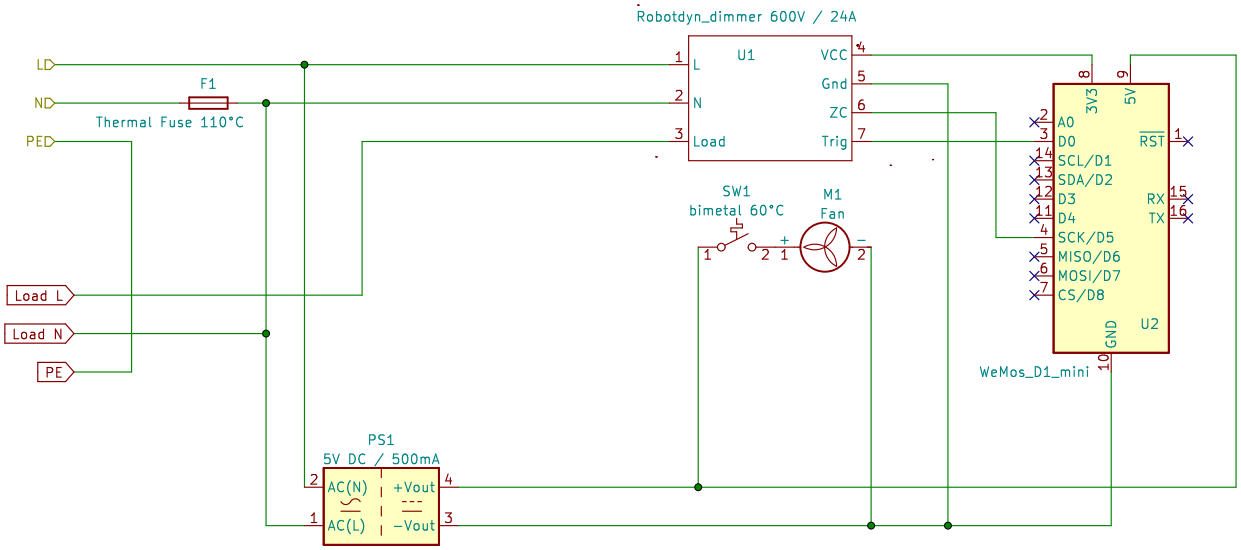

frtz13

Sheet: /

File: Energy Router.kicad_sch

Title: Energy Router – Dimmer

Size: A4	Date: 2023-03-25	**Rev: 1**
KiCad E.D.A. eeschema 7.0.2		Id: 1/1