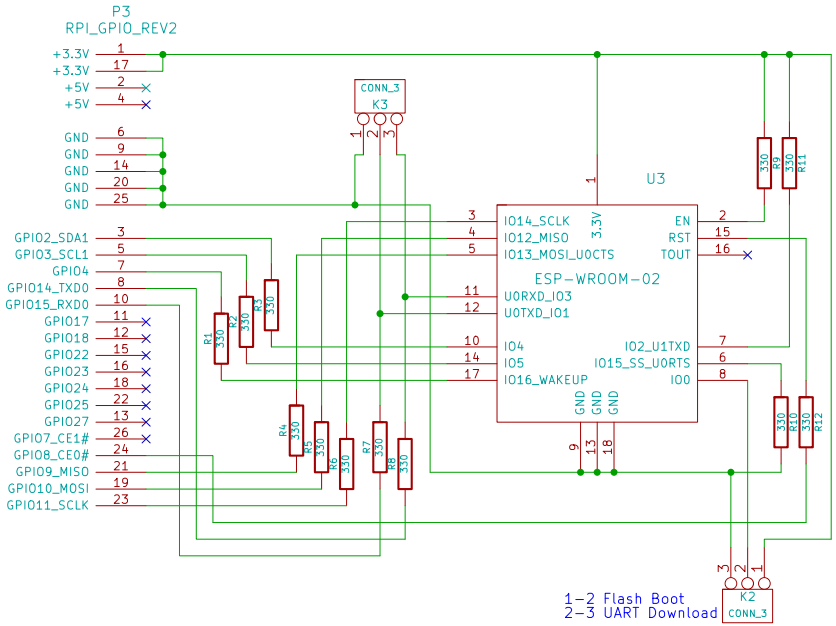


| | | |
|---|---|---|
| File: rpi_wifi.sch | | |
| Sheet: / | | |
| Title: | | |
| Size: A4 | Date: 22 aug 2015 | Rev: |
| KiCad E.D.A. | | Id: 1/1 |

1 2 3 4 5