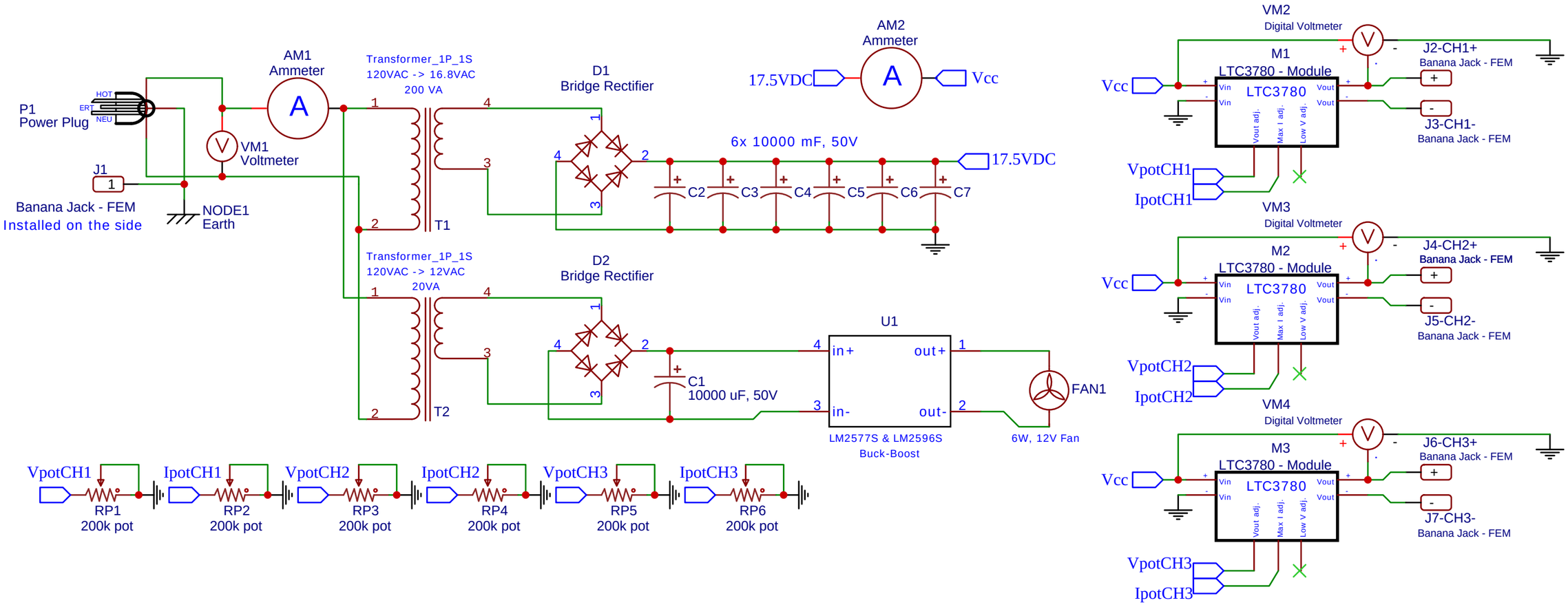

TITLE: Triple Output Briefcase Power Supply		REV: 1.0
EasyEDA	Company: Your Company	Sheet: 1/1
	Date: 2020-07-07 Drawn By: fsadrzad	