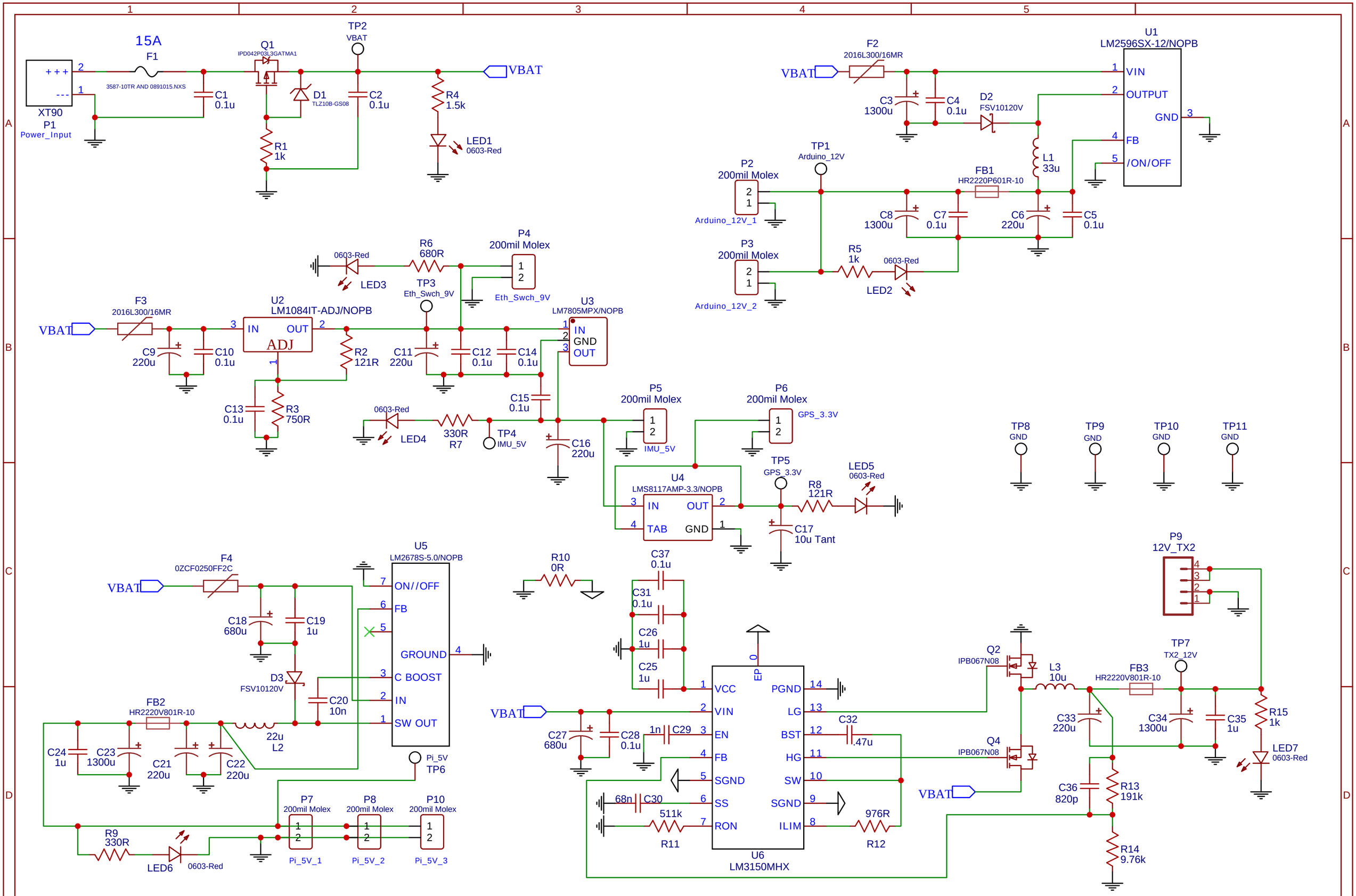

TITLE: Mars Rover Power Conversion/Distribution Board	REV: 1.0
Date: 2018-10-10	Sheet: 1/1
EASYEDA V5.7.26	Drawn By: fsadrzad