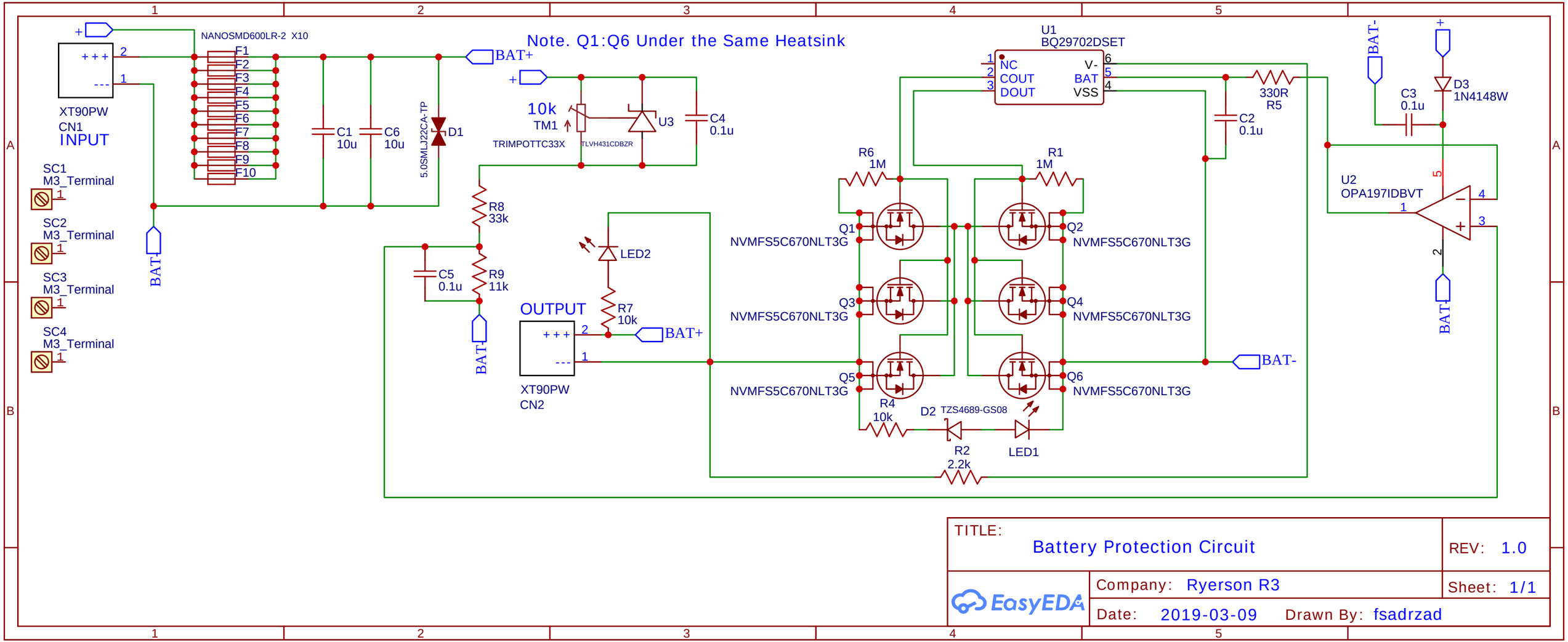

TITLE: Battery Protection Circuit

REV: 1.0

Company: Ryerson R3

Sheet: 1/1

Date: 2019-03-09

Drawn By: fsadrzad