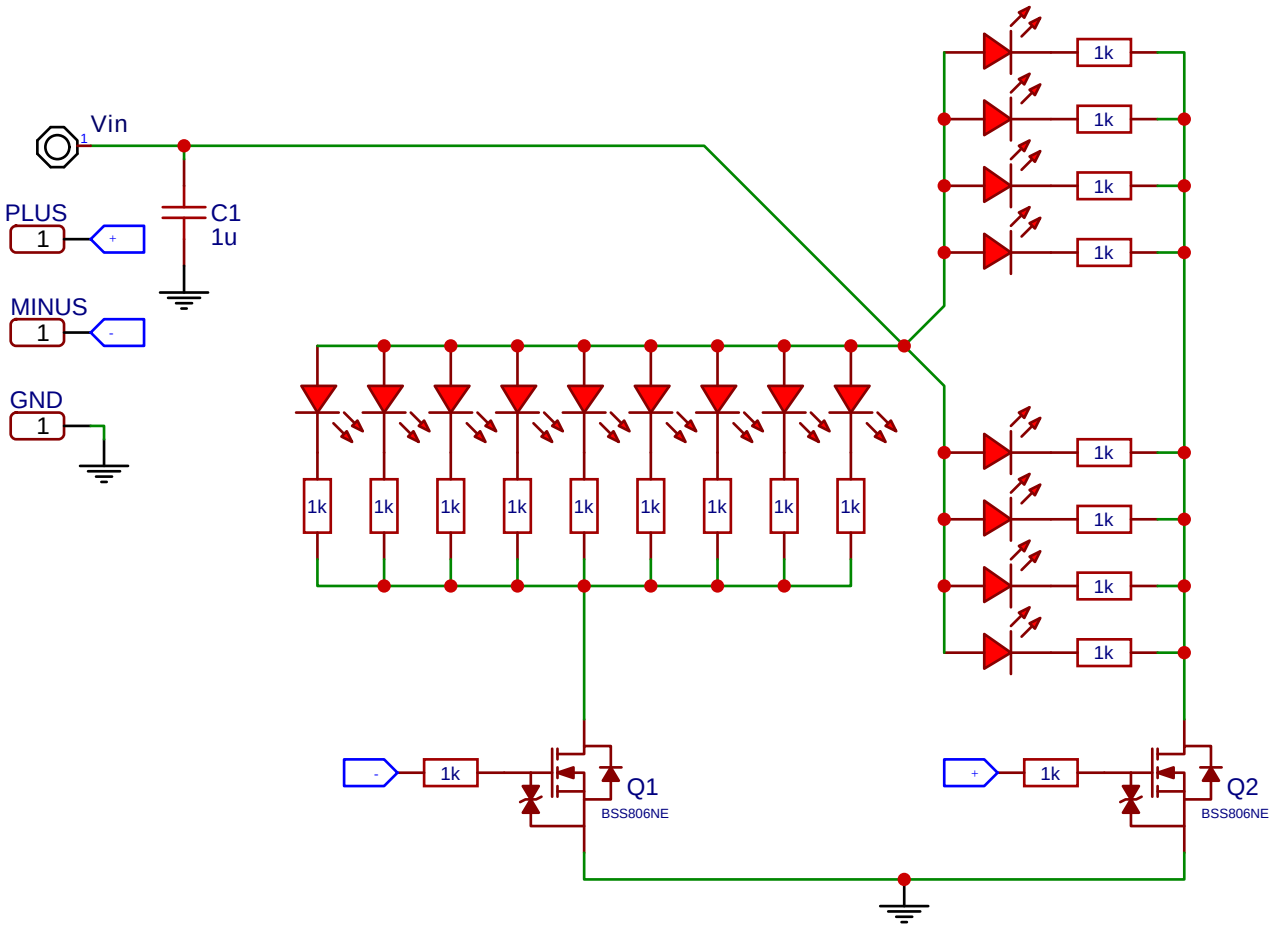

TITLE: Plus_Minus Display		REV: 1.0
EasyEDA	Company: Your Company	Sheet: 1/1
	Date: 2022-02-08 Drawn By: fsadrzad	