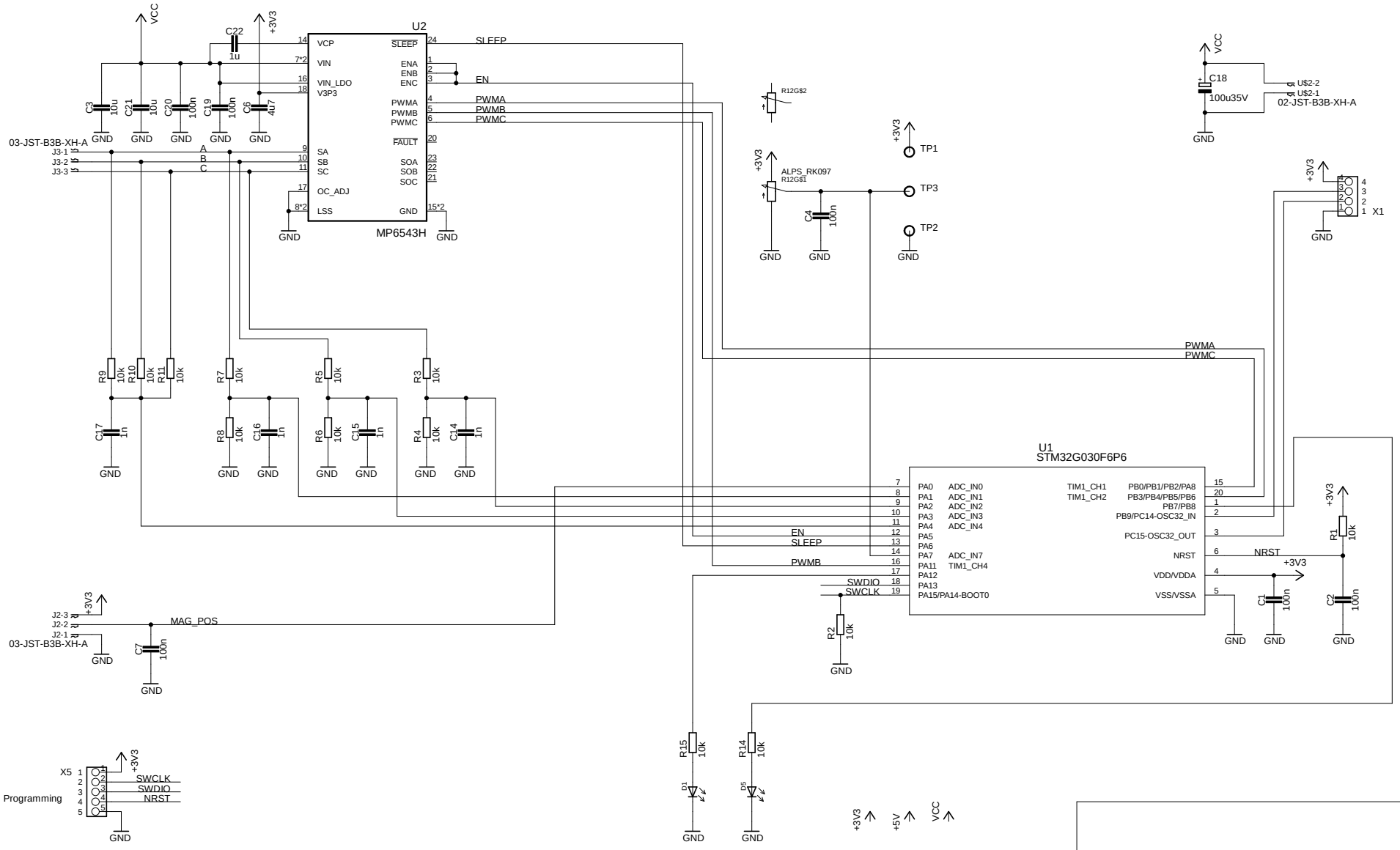
U2
MP6543H
VCP
VIN
VIN_LDO
V3P3
SLEEP
ENA
ENB
ENC
PWMA
PWMB
PWMC
FAULT
SA
SB
SC
OC_ADJ
LSS
SOA
SOB
SOC
GND
U1
STM32G030F6P6
PA0 ADC_IN0
PA1 ADC_IN1
PA2 ADC_IN2
PA3 ADC_IN3
PA4 ADC_IN4
PA5
PA6
PA7 ADC_IN7
PA11 TIM1_CH4
PA12
PA13
PA15/PA14-BOOT0
TIM1_CH1 PB0/PB1/PB2/PA8
TIM1_CH2 PB3/PB4/PB5/PB6
PB7/PB8
PB9/PC14-OSC32_IN
PC15-OSC32_OUT
NRST
VDD/VDDA
VSS/VSSA
03-JST-B3B-XH-A
02-JST-B3B-XH-A
ALPS_RK097
MAG_POS
Programming
SWCLK
SWDIO
NRST
EN
PWMA
PWMB
PWMC
VCC
+3V3
+5V
TP1
TP2
TP3
X1
X5
C18
100u35V
C22
1u
C3
10u
C21
10u
C20
100n
C19
100n
C6
4u7
C4
100n
C7
100n
C1
100n
C2
100n
R1
10k
R2
10k
R3
10k
R4
10k
R5
10k
R6
10k
R7
10k
R8
10k
R9
10k
R10
10k
R11
10k
R14
10k
R15
10k
C14
1n
C15
1n
C16
1n
C17
1n
D1
D5
R12G$2
R12G$1
U$2-2
U$2-1
TITLE: pcb-bldc-sensorless2
Document Number:
REV:
Date: 11.06.2024 20:30
Sheet: 1/1