A Redundant Measurement Method for Electromagnetic-Suspension Displacement Estimation Using Electromagnetic Signals

Yifan Fu
School of Electrical Engineering
Southwest Jiaotong University
Chengdu, China
fu1fan@my.swjtu.edu.cn

Jinwen Dong
School of Electrical Engineering
Southwest Jiaotong University
Chengdu, China
djw@swjtu.edu.cn

Wenjing Liu
School of Electrical Engineering
Southwest Jiaotong University
Chengdu, China
lingran@my.swjtu.edu.cn

Rui Zhao
School of Electrical Engineering
Southwest Jiaotong University
Chengdu, China
zr2023111783@my.swjtu.edu.cn

Yida Chen
School of Electrical Engineering
Southwest Jiaotong University
Chengdu, China
misakae@my.swjtu.edu.cn

Yongyu Yang
School of Electrical Engineering
Southwest Jiaotong University
Chengdu, China
3079819669@qq.com

***Abstract*—Stable operation of electromagnetic suspension (EMS) requires an accurate, low-delay displacement signal, usually provided by an eddy-current sensor. This sensor, however, increases cost and is vulnerable to temperature drift and electromagnetic interference. This paper investigates whether a redundant displacement signal can be reconstructed from electrical and magnetic quantities already measured in a single-degree-of-freedom (1-DOF) EMS system. The estimator target is the sensor reference displacement $h(t)$, while the physical air gap $g(t)$ is used only in the magnetic-circuit derivation. A Hall-sensor inverse relation linking $g(t)$, coil current, and local flux density is derived and its limitations under practical excitation are analyzed. Three-dimensional finite-element method (FEM) simulations support the simplified magnetic-circuit interpretation along the main flux path, but also show looped trajectories in the (g, B_{s}, i) state space caused by hysteresis and pulse-width modulation (PWM) ripple, so a single instantaneous pair (i, B_{s}) is insufficient to determine displacement. Motivated by this result, a five-channel sequence-to-one estimator with multilayer perceptron (MLP), long short-term memory (LSTM), and gated recurrent unit (GRU) backbones is trained to predict $h(t)$. On the experimental platform, the LSTM achieves a mean absolute error (MAE) of 0.901 analog-to-digital converter (ADC) counts (≈0.007 mm) and $R^2 = 0.9991$, improving MAE by 35.2% over the MLP baseline. The results indicate that redundant displacement estimation depends not only on instantaneous current and flux but also on the recent electromagnetic trajectory.**

***Index Terms*—Redundant measurement, air-gap estimation, electromagnetic suspension, magnetic-circuit analysis, hysteresis, LSTM.**

I. Introduction

In an EMS-type maglev system, the levitation electromagnet is regulated around an open-loop unstable equilibrium, so a reliable displacement signal is required for closed-loop suspension [1]. In most laboratory and engineering systems this signal is supplied by an eddy-current displacement sensor, which increases hardware cost, occupies limited space near the suspension gap, and can be affected by temperature drift or electromagnetic interference [2]–[4]. Since the coil current and magnetic flux signals are already available in the EMS device, they provide a possible source for a redundant displacement channel. The output of this channel should match the reference displacement $h(t)$ measured by the displacement sensor. The physical air gap $g(t)$ is used only as an idealized variable for magnetic-circuit analysis.

Self-sensing techniques for magnetic levitation and magnetic bearing systems have been studied for decades. Observer-based methods estimate the mechanical state from a dynamic model [5], [6], while another class injects additional signals or uses inductance variation to infer the air gap from electromagnetic impedance [7], [8]. These methods are useful references, but they do not directly solve the redundant-measurement problem considered here. Observer accuracy depends strongly on model quality and usually comes with non-negligible computation, whereas impedance-based schemes are sensitive to noise, switching ripple, and operating-point variation. For an EMS redundant channel, the mapping must also remain consistent with the displacement signal used by the existing feedback loop.

The starting point of this paper is the magnetic-circuit relation between coil current, local magnetic flux density, and air gap. The relation is attractive because it gives a direct inverse form, but the inverse form relies on an equivalent permeability that is not single-valued under hysteresis. PWM excitation further perturbs the current and magnetic state. The key issue is therefore not only whether $h(t)$ is correlated with electromagnetic signals, but whether an instantaneous electro-

This work was supported by the Fundamental Research Funds for the Central Universities.

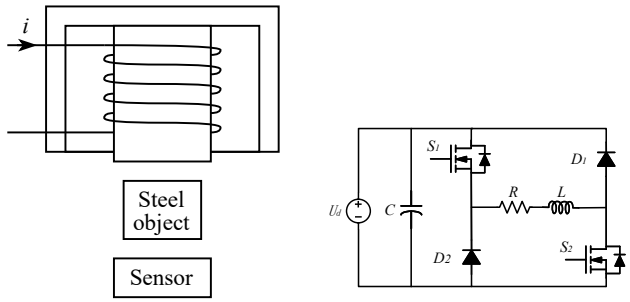

(a) System schematic (b) Two-quadrant chopper

Fig. 1. 1-DOF EMS schematic and two-quadrant chopper. S_1/D_2 form the active leg; D_1/S_2 provide the freewheeling path.

magnetic sample contains enough information to recover it.

The paper makes the following technical points:

- Magnetic-circuit analysis gives the candidate static observable $i(t)/B_{\mathrm{s}}(t)$ for the idealized physical air gap $g(t)$.
- FEM trajectories in the (g, B_{s}, i) space show that hysteresis and PWM ripple produce history-dependent loops, so the same instantaneous electromagnetic state may correspond to different air-gap values.
- Guided by this observation, a five-channel history-window estimator using $i(t)$, $B_{\mathrm{s}}(t)$, $D(t)$, $\Delta i(t)$, and $\Delta B_{\mathrm{s}}(t)$ is built for the reference displacement $h(t)$, and MLP, LSTM, and GRU models are compared on a 1-DOF EMS platform under the same input representation and training procedure.

II. System Description and Magnetic-Circuit Analysis

A. 1-DOF EMS Platform

The experimental testbed is a 1-DOF EMS system with a U-shaped electromagnet, an excitation coil, a suspended ferromagnetic object, and an eddy-current displacement sensor for measuring the reference displacement $h(t)$. The idealized physical air gap $g(t)$ introduced in Section II-B is used only for magnetic-circuit analysis. Fig. 1 shows the system schematic and the 10 kHz two-quadrant chopper used to drive the electromagnet, and Fig. 2 shows the experimental platform. A cascaded position–current dual-loop proportional-integral-derivative (PID) controller maintains stable suspension. The acquired signals are coil current $i(t)$, Hall-sensor flux density $B_{\mathrm{s}}(t)$, controller duty cycle $D(t)$, and reference displacement $h(t)$. All analog channels are digitized by an external 12-bit ADC at 1 MHz and decimated to 10 kHz through cascaded-integrator-comb (CIC) filtering before being fed to the estimator.

As shown in Table I, data were collected under three operating conditions. Under the random condition, white noise was injected only into the position reference; after passing through the closed-loop dynamics, the actual suspension response is no longer strictly white noise. A total of 60 datasets were collected, each containing 131 072 synchronized samples.

Fig. 3 shows three synchronized measured signals under sinusoidal disturbance. Current and local magnetic flux density are strongly coupled, but their relation to the reference displacement is not purely instantaneous. The waveform evolution is affected by both closed-loop dynamics and magnetic memory, so a given (i, B_{s}) pair does not uniquely determine h.

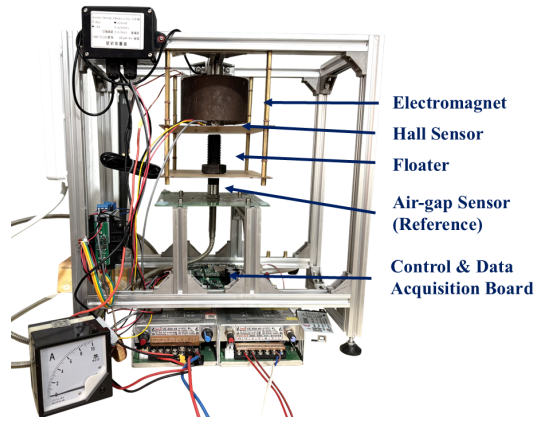

Fig. 2. Experimental platform of the 1-DOF EMS system.

TABLE I
Data Acquisition Conditions

Condition	Disturbance	Excitation Details
Steady state	Constant ref.	Physical air gap: 6–12 mm
Sinusoidal	Periodic ref.	Freq: 0.5–100 Hz; Amp: 0.15–0.4 mm
Random	White noise in ref.	Std dev: 0.15 mm

For the theoretical analysis, a three-dimensional FEM model was built in COMSOL Multiphysics, as shown in Fig. 4. The model uses a moving mesh for the suspended object, closed-loop current regulation to reproduce the stabilized operating point, and the Jiles–Atherton model [9] to describe ferromagnetic hysteresis.

B. Finite-Element Verification and Theoretical Derivation

The finite-element model is first used to check whether the simplified magnetic-circuit description is acceptable. Fig. 5 shows the magnetic flux density distribution and flux lines. The magnetic field is mainly concentrated in the iron core and air-gap regions, with only weak leakage flux in the surrounding air. Thus, as a first-order approximation, the EMS device can be treated as a magnetic circuit composed of the ferromagnetic path and the air gap.

Applying Ampère's circuital law to the main flux loop indicated in Fig. 6 gives

$$Ni(t) = H_{\mathrm{c}}(t)\,\ell_{\mathrm{c}} + H_{\mathrm{g}}(t)\,g(t), \tag{1}$$

where ℓ_{c} is the equivalent magnetic path length of the ferromagnetic material, and $H_{\mathrm{c}}(t)$ and $H_{\mathrm{g}}(t)$ are the magnetic field intensities in the core and air gap, respectively.

Under the ideal magnetic-circuit assumption, the main magnetic flux $\Phi(t)$ is continuous in the core and the air gap, while leakage flux and fringing effects are neglected. The magnetic flux densities then satisfy

$$B_{\mathrm{c}}(t) = \frac{\Phi(t)}{A_{\mathrm{c}}}, \qquad B_{\mathrm{g}}(t) = \frac{\Phi(t)}{A_{\mathrm{g}}}, \tag{2}$$

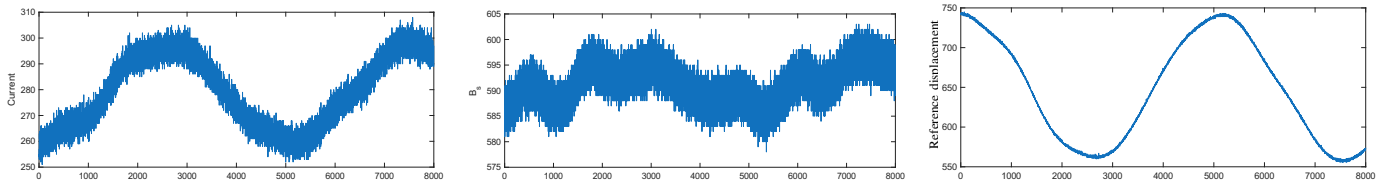

(a) Coil current (b) Local magnetic flux density (c) Reference-displacement sensor output

Fig. 3. Synchronized measured signals under sinusoidal disturbance. The first 8000 samples of the coil current, local magnetic flux density near the air gap, and reference-displacement sensor output are shown.

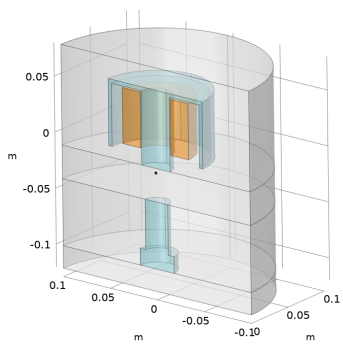

Fig. 4. Three-dimensional finite-element model of the 1-DOF EMS system.

with the constitutive approximations

$$B_{\mathrm{g}}(t) \approx \mu_0 H_{\mathrm{g}}(t), \qquad B_{\mathrm{c}}(t) \approx \mu_0 \mu_{\mathrm{r}}(t) H_{\mathrm{c}}(t), \tag{3}$$

where A_{c} and A_{g} are the equivalent cross-sectional areas of the core and the air gap, and $\mu_{\mathrm{r}}(t)$ is the equivalent relative permeability of the ferromagnetic core.

Substituting (2) and (3) into (1) yields the idealized magnetic-circuit relation

$$Ni(t) \approx \frac{\Phi(t)}{\mu_0 \mu_{\mathrm{r}}(t) A_{\mathrm{c}}}\,\ell_{\mathrm{c}} + \frac{\Phi(t)}{\mu_0 A_{\mathrm{g}}}\,g(t), \tag{4}$$

from which the algebraic inverse expression of the air gap can be formally written as

$$g(t) \approx \frac{\mu_0 A_{\mathrm{g}} Ni(t)}{\Phi(t)} - \frac{A_{\mathrm{g}}}{A_{\mathrm{c}}}\frac{\ell_{\mathrm{c}}}{\mu_{\mathrm{r}}(t)}. \tag{5}$$

In practice, $\Phi(t)$ is difficult to measure directly. A Hall sensor is therefore placed at the starred position in Fig. 6 to measure the local magnetic flux density $B_{\mathrm{s}}(t)$ near the air gap. Combined with the finite-element result in Fig. 5(a), this measurement point can be regarded as lying in the effective influence region of the main magnetic circuit, so that $\Phi(t) \approx A_{\mathrm{eff}} B_{\mathrm{s}}(t)$ or, equivalently, $B_{\mathrm{g}}(t) \approx \alpha_{\mathrm{s}} B_{\mathrm{s}}(t)$ with $\alpha_{\mathrm{s}} = A_{\mathrm{eff}}/A_{\mathrm{g}}$. The practical Hall-sensor-based inverse form becomes

$$g(t) \approx \frac{\mu_0 Ni(t)}{\alpha_{\mathrm{s}} B_{\mathrm{s}}(t)} - \frac{A_{\mathrm{g}}}{A_{\mathrm{c}}}\frac{\ell_{\mathrm{c}}}{\mu_{\mathrm{r}}(t)}. \tag{6}$$

Equation (6) indicates that $i(t)/B_{\mathrm{s}}(t)$ provides the main air-gap information, while the magnetization state of the core enters as a correction term.

Equation (6) has two practical limitations when used as a redundant measurement law. First, the effective area ratio $\alpha_{\mathrm{s}} = A_{\mathrm{eff}}/A_{\mathrm{g}}$ depends on the flux distribution near the Hall sensor and on sensor placement, so it is not a pure geometric constant and must be obtained from finite-element calibration or in-situ measurement. Second, the equivalent relative permeability $\mu_{\mathrm{r}}(t)$ is not a single-valued function of the working point. Under PWM excitation and closed-loop transients, the operating trajectory passes through minor hysteresis loops, and the same instantaneous (i, B_{s}) pair may correspond to different magnetization states. Even with a calibrated α_{s}, pointwise evaluation of (6) can therefore yield a multi-valued mapping. Classical hysteresis models such as Jiles–Atherton can describe this behavior in principle, but their parameters are uncertain and operating-condition dependent, limiting their

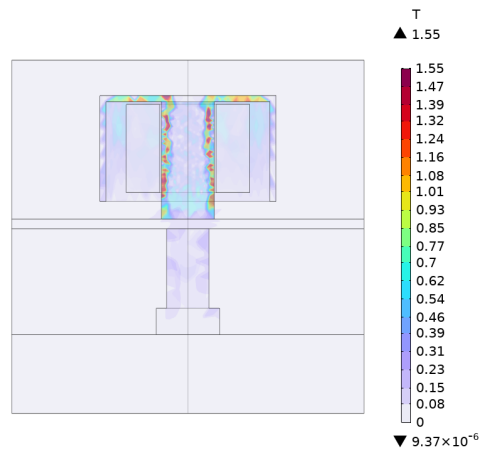

(a) Magnetic flux density distribution

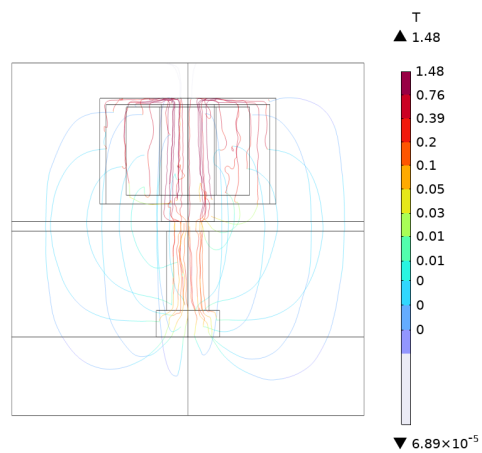

(b) Magnetic flux lines

Fig. 5. Finite-element verification of the magnetic-circuit assumption.

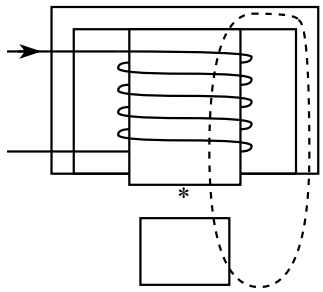

Fig. 6. Simplified magnetic circuit and Hall-sensor placement.

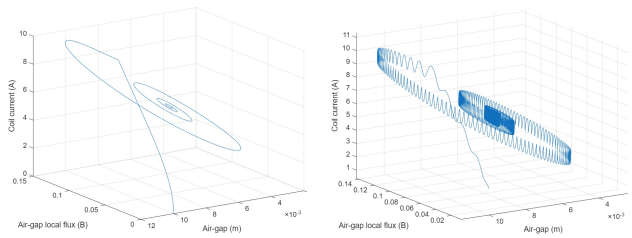

(a) Without PWM ripple (b) With 10 kHz, 0.5 A ripple

Fig. 7. Finite-element state trajectories in the (g, B_s, i) space during closed-loop stabilization. Hysteresis and current ripple make the instantaneous electromagnetic state multi-valued with respect to the physical air gap.

reliability as a stand-alone redundant measurement channel.

In this work, the analytical model and FEM analysis are therefore not used as the final calibration law. Instead, the analytical inverse form identifies the physically relevant electromagnetic quantities, especially $i(t)$ and $B_\mathrm{s}(t)$, while the FEM trajectories explain why the final estimator must use temporal information. This role separation connects the magnetic-circuit model, the FEM study, and the learning-based redundant measurement channel.

III. Finite-Element Analysis of History Dependence

The derivation above relies on the idealized assumption that $\mu_\mathrm{r}(t)$ is single-valued. In practical electromagnets, hysteresis makes the magnetization state history dependent, so the inverse form in (6) can still produce large errors even when the current and local flux density are measured accurately.

Fig. 7 shows the state trajectories obtained from finite-element simulation during PID closed-loop convergence. In the ripple-free case, the trajectory in the (g, B_s, i) space is not confined to a single surface, indicating that the same instantaneous pair (i, B_s) may correspond to different air-gap values. When a 10 kHz, 0.5 A ripple is superimposed on the coil current, this deviation from a single surface becomes more pronounced, indicating stronger nonlinearity and memory effects. Static mappings are therefore insufficient for practical EMS operation, and temporal estimation is required.

IV. Data-Driven Estimation Models

A. Problem Formulation and Feature Design

The task is formulated as sequence-to-one regression: at each time step t, the reference displacement is predicted as $\hat{h}_t = f(\mathbf{X}_t)$ from a historical window $\mathbf{X}_t = [\mathbf{x}_{t-L+1}, \ldots, \mathbf{x}_t]$ with $L = 256$ (25.6 ms at 10 kHz). The input vector is

$$\mathbf{x}_t = [i(t),\ \Delta i(t),\ B_\mathrm{s}(t),\ \Delta B_\mathrm{s}(t),\ D(t)]^\mathrm{T}, \tag{7}$$

where $\Delta(\cdot)$ denotes first-order differencing. The terms $\Delta i(t)$ and $\Delta B_\mathrm{s}(t)$ are computed from the sampled signals and are not directly acquired channels. The five input channels follow the role of the analytical and FEM analysis in Sections II and III. The coil current $i(t)$ and Hall-sensor flux density $B_\mathrm{s}(t)$ appear directly in the inverse expression (6) and together describe the dominant electromagnetic state related to force generation. The duty cycle $D(t)$ represents the control effort delivered by the two-quadrant chopper; it provides the closed-loop driving state without sampling the raw PWM waveform and introducing switching aliasing. The first-order differences $\Delta i(t)$ and $\Delta B_\mathrm{s}(t)$ encode the local direction of the electromagnetic trajectory, helping the estimator distinguish different positions on the hysteretic loops in Fig. 7.

B. Candidate Models and Training

Three model families are compared with the same input representation and training pipeline. The MLP flattens the 5×256 input window into a 1280-dimensional vector and uses two fully connected hidden layers of width 256 with ReLU activation, followed by a linear scalar output. It is used as a non-temporal baseline and does not explicitly exploit the sequential structure of $\mathbf{X}_t$. The LSTM [10] and GRU [11] are two-layer stacked recurrent networks with a hidden size of 64. The five-channel input is fed along the time axis, and the final hidden state is mapped to $\hat{h}_t$ through a linear layer. Because the hidden state retains information about the recent magnetization trajectory, the recurrent models can distinguish points that share the same instantaneous (i, B_s) on the looping trajectories in Fig. 7. The GRU uses the same depth and width as the LSTM but no separate cell state, so it provides a lighter recurrent baseline.

The recurrent formulation is not intended to replace all observer-based self-sensing methods. Classical observers and Kalman-type estimators are well established for magnetic levitation systems [5], [6], but they require a sufficiently accurate state-space model, noise assumptions, and identifiable force or hysteresis parameters. The redundant channel considered here must reproduce the existing sensor reference $h(t)$ under PWM ripple, magnetic hysteresis, and closed-loop operating variation, for which the instantaneous electromagnetic mapping is multi-valued. A recurrent estimator is therefore used to learn the unmodeled history dependence from the measured trajectory, while the MLP baseline tests whether the same window can be handled without an explicit recurrent state.

All models are trained with the same pipeline. Each recording is first split chronologically into a 70% training segment and a 30% test segment. Differencing, min–max normalization to $[-1, 1]$, and sliding-window construction are then applied *within* each segment, so that no window crosses the split boundary and no test-time statistic is used during training. Optimization uses AdamW with learning rate 2×10^{-3}, weight

TABLE II
CANDIDATE MODEL COMPARISON.

Model	Params	MAE (ct)	MAE (μm)	RMSE (ct)	RMSE (μm)	R^2
MLP	394 K	1.390	11.12	2.125	17.00	0.9974
LSTM	52 K	0.901	7.21	1.273	10.18	0.9991
GRU	39 K	0.956	7.65	1.333	10.66	0.9990

TABLE III
PER-CONDITION RECURRENT-ESTIMATOR ERRORS.

Model	Condition	MAE (ct)	MAE (μm)	RMSE (ct)	RMSE (μm)	R^2
LSTM	Steady	0.709	5.67	0.887	7.10	0.9995
LSTM	Sinus.	0.753	6.02	0.971	7.77	0.9995
LSTM	Random	2.057	16.46	2.605	20.84	0.9935
GRU	Steady	0.774	6.19	0.979	7.83	0.9994
GRU	Sinus.	0.802	6.42	1.033	8.26	0.9994
GRU	Random	2.114	16.91	2.663	21.30	0.9932

decay 10^{-4}, batch size 256, 50 epochs, and mean squared error loss. The sliding-window stride is 4 during training, and the same linear output layer is used for all three architectures to isolate the effect of the backbone.

V. EXPERIMENTAL RESULTS

All models receive the same five-channel input with $L = 256$. The evaluation metrics are MAE, root mean square error (RMSE), and R^2. MAE and RMSE are displacement errors reported in ADC counts and converted to physical units using 1 count ≈ 0.008 mm = 8 μm. The coefficient of determination R^2 is dimensionless.

Table II compares the three model families under identical data and training conditions. The LSTM gives the lowest overall error, with MAE = 0.901 counts (7.21 μm) and $R^2 = 0.9991$. The GRU gives similar accuracy with fewer parameters, whereas the MLP has a larger error despite its much larger parameter count.

Compared with the MLP baseline, the LSTM reduces the MAE by 35.2% and the RMSE by 40.1%, while using 52 K parameters instead of 394 K. The MLP must learn temporal dependence through weights connected to the flattened input window, whereas the recurrent models propagate a compact hidden state that carries magnetization history. The GRU remains close to the LSTM with 39 K parameters (MAE = 0.956).

Table III reports the LSTM and GRU errors under each operating condition. Both recurrent models remain below one ADC count, or about 8 μm, on the steady-state and sinusoidal subsets. The random-disturbance subset is harder because its broadband reference excites a wider range of magnetization trajectories and increases the history-dependent part of the mapping. Even in this case, the LSTM keeps $R^2 > 0.993$.

The present validation should be interpreted as offline, open-loop estimator validation using data collected from a closed-loop EMS platform. The learned estimator did not replace the eddy-current displacement sensor in the feedback path during these experiments. For direct control use, the estimation error would enter the feedback loop as an additional measurement error, and any systematic bias or condition-dependent error would reduce the available stability and transient-performance margins. Latency must also be bounded explicitly: although the input window spans 25.6 ms, a streaming implementation need not delay the output by the full window length, but preprocessing, inference time, filtering, and phase lag must all be included in the control design. The larger errors under random disturbance therefore indicate the operating region that should receive particular attention in future closed-loop validation and delay-compensation tests.

VI. CONCLUSION

This paper examined the estimation of the reference displacement $h(t)$ of an EMS system from electromagnetic signals. A Hall-sensor-based inverse relation was derived from magnetic-circuit analysis, and three-dimensional FEM simulation was used to identify the conditions—hysteresis and PWM ripple—under which pointwise static inversion becomes multi-valued with respect to the physical air gap. A physics-informed five-channel sequence-to-one formulation was then evaluated on a 1-DOF EMS platform using MLP, LSTM, and GRU architectures under identical training and evaluation conditions. The LSTM achieved MAE = 0.901 ADC counts (7.21 μm) and $R^2 = 0.9991$. These results suggest that retaining recent electromagnetic history through a recurrent hidden state is necessary for this redundant channel on the 1-DOF platform. The current experiments validate the estimator offline rather than as a replacement feedback sensor. Real-time and closed-loop implementation—including fixed-point arithmetic, bounded inference latency, delay compensation, and stability-margin assessment—is left for future work.

REFERENCES

[1] F. Li, Y. Sun, J. Xu, Z. He, and G. Lin, "Control Methods for Levitation System of EMS-Type Maglev Vehicles: An Overview," *Energies*, vol. 16, no. 7, p. 2995, Mar. 2023.

[2] G. Gruber, B. Schweighofer, M. Berger, T. Leitner, G. Kloesch, and H. Wegleiter, "Eddy Current Position Measurement in Harsh Environments: A Temperature Compensation and Calibration Approach," *Sensors*, vol. 24, no. 5, p. 1483, Feb. 2024.

[3] P. Kurnyta-Mazurek and A. Kurnyta, "The Influence of Magnetic Field of AMB on Eddy-Current Sensor Operation," *Sensors*, vol. 23, no. 4, p. 2332, 2023.

[4] Y. Lu, H. Li, H. Hu, Y. Bi, and P. Wang, "A smart compensation method for large range eddy current displacement sensor," *Sensors and Actuators A: Physical*, vol. 383, p. 116171, 2025.

[5] D. Vischer and H. Bleuler, "Self-sensing active magnetic levitation," *IEEE Transactions on Magnetics*, vol. 29, no. 2, pp. 1276–1281, Mar. 1993.

[6] Y.-K. Tzeng and T. Wang, "A novel compensating approach for self-sensing Maglev system with controlled-PM electromagnets," *IEEE Transactions on Magnetics*, vol. 31, no. 6, pp. 4208–4210, Nov. 1995.

[7] A. Schammass, R. Herzog, P. Buhler, and H. Bleuler, "New results for self-sensing active magnetic bearings using modulation approach," *IEEE Transactions on Control Systems Technology*, vol. 13, no. 4, pp. 509–516, Jul. 2005.

[8] K. Sivadasan, "Analysis of self-sensing active magnetic bearings working on inductance measurement principle," *IEEE Transactions on Magnetics*, vol. 32, no. 2, pp. 329–334, Mar. 1996.

[9] D. C. Jiles and D. L. Atherton, "Theory of ferromagnetic hysteresis," *Journal of Magnetism and Magnetic Materials*, vol. 61, no. 1, pp. 48–60, Sep. 1986.

[10] S. Hochreiter and J. Schmidhuber, "Long short-term memory," *Neural Computation*, vol. 9, no. 8, pp. 1735–1780, 1997.

[11] K. Cho, B. van Merrienboer, C. Gulcehre, D. Bahdanau, F. Bougares, H. Schwenk, and Y. Bengio, "Learning phrase representations using RNN encoder–decoder for statistical machine translation," in *Proceedings of the 2014 Conference on Empirical Methods in Natural Language Processing (EMNLP)*. Doha, Qatar: Association for Computational Linguistics, Oct. 2014, pp. 1724–1734. [Online]. Available: https://aclanthology.org/D14-1179/