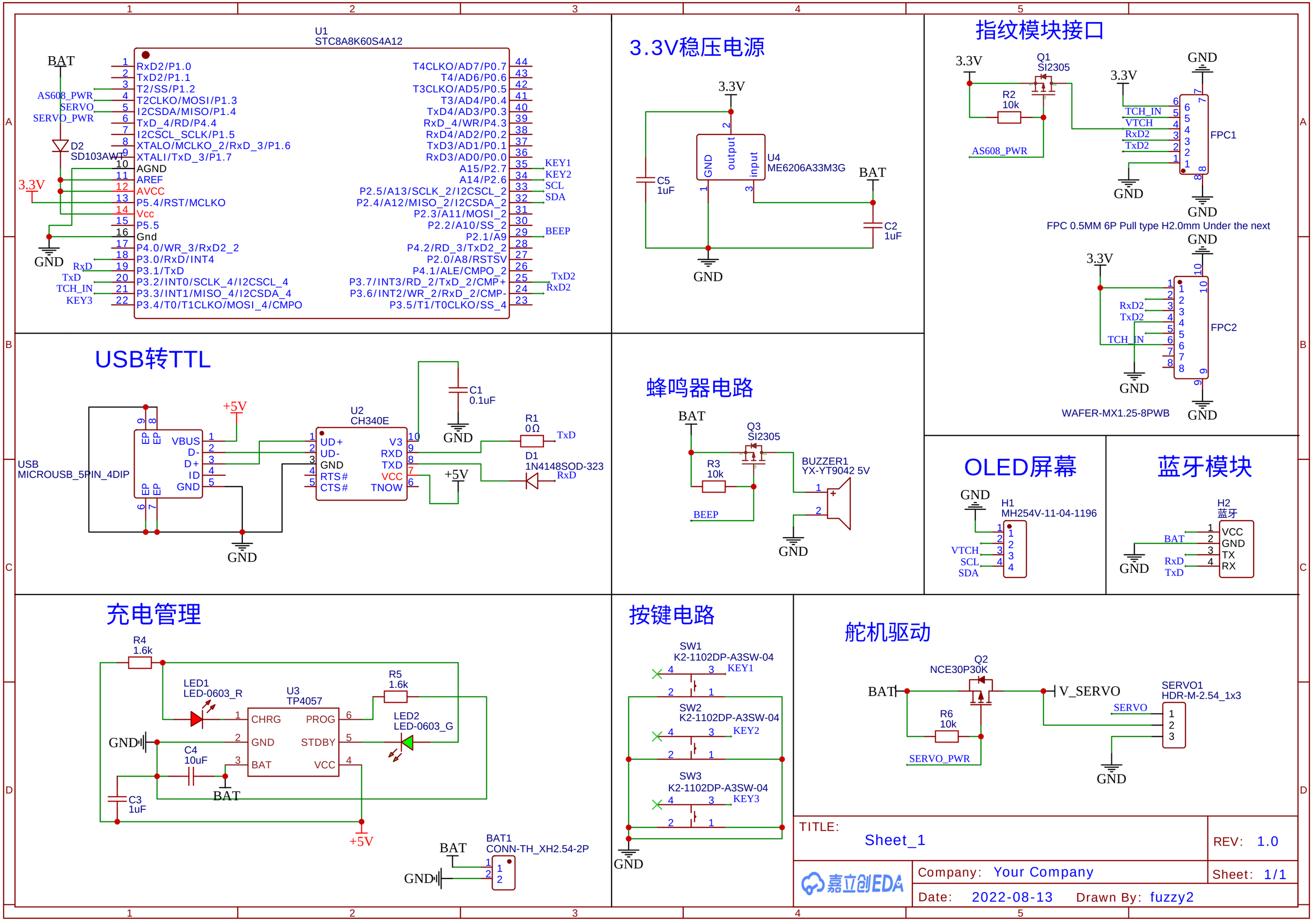
U1
STC8A8K60S4A12
BAT
AS608_PWR
SERVO
SERVO_PWR
D2
SD103AWT
3.3V
GND
RxD
TxD
TCH_IN
KEY3
RxD2/P1.0
TxD2/P1.1
T2/SS/P1.2
T2CLKO/MOSI/P1.3
I2CSDA/MISO/P1.4
TxD_4/RD/P4.4
I2CSCL_SCLK/P1.5
XTALO/MCLKO_2/RxD_3/P1.6
XTALI/TxD_3/P1.7
AGND
AREF
AVCC
P5.4/RST/MCLKO
Vcc
P5.5
Gnd
P4.0/WR_3/RxD2_2
P3.0/RxD/INT4
P3.1/TxD
P3.2/INT0/SCLK_4/I2CSCL_4
P3.3/INT1/MISO_4/I2CSDA_4
P3.4/T0/T1CLKO/MOSI_4/CMPO
T4CLKO/AD7/P0.7
T4/AD6/P0.6
T3CLKO/AD5/P0.5
T3/AD4/P0.4
TxD4/AD3/P0.3
RxD_4/WR/P4.3
RxD4/AD2/P0.2
TxD3/AD1/P0.1
RxD3/AD0/P0.0
A15/P2.7
A14/P2.6
P2.5/A13/SCLK_2/I2CSCL_2
P2.4/A12/MISO_2/I2CSDA_2
P2.3/A11/MOSI_2
P2.2/A10/SS_2
P2.1/A9
P4.2/RD_3/TxD2_2
P2.0/A8/RSTSV
P4.1/ALE/CMPO_2
P3.7/INT3/RD_2/TxD_2/CMP+
P3.6/INT2/WR_2/RxD_2/CMP-
P3.5/T1/T0CLKO/SS_4
KEY1
KEY2
SCL
SDA
BEEP
TxD2
RxD2
3.3V稳压电源
3.3V
C5
1uF
U4
ME6206A33M3G
GND
output
input
BAT
C2
1uF
指纹模块接口
3.3V
Q1
SI2305
R2
10k
AS608_PWR
TCH_IN
VTCH
RxD2
TxD2
FPC1
FPC 0.5MM 6P Pull type H2.0mm Under the next
FPC2
WAFER-MX1.25-8PWB
USB转TTL
+5V
USB
MICROUSB_5PIN_4DIP
VBUS
D-
D+
ID
GND
U2
CH340E
UD+
UD-
RTS#
CTS#
V3
RXD
TXD
VCC
TNOW
C1
0.1uF
R1
0Ω
D1
1N4148SOD-323
蜂鸣器电路
Q3
SI2305
R3
10k
BUZZER1
YX-YT9042 5V
OLED屏幕
H1
MH254V-11-04-1196
VTCH
SCL
SDA
蓝牙模块
H2
蓝牙
VCC
GND
TX
RX
充电管理
R4
1.6k
LED1
LED-0603_R
U3
TP4057
CHRG
GND
BAT
PROG
STDBY
VCC
R5
1.6k
LED2
LED-0603_G
C4
10uF
C3
1uF
BAT1
CONN-TH_XH2.54-2P
按键电路
SW1
K2-1102DP-A3SW-04
KEY1
SW2
K2-1102DP-A3SW-04
KEY2
SW3
K2-1102DP-A3SW-04
KEY3
舵机驱动
Q2
NCE30P30K
V_SERVO
R6
10k
SERVO_PWR
SERVO
SERVO1
HDR-M-2.54_1x3
TITLE:
Sheet_1
REV: 1.0
Company: Your Company
Sheet: 1/1
Date: 2022-08-13
Drawn By: fuzzy2
嘉立创EDA