BRAC UNIVERSITY
Dept. of Computer Science and Engineering

CSE250L
Circuits and Electronics Laboratory

Student ID:	22201594	**Lab Section:**	31
Name:	Reshad Ul Karim	**Lab Group:**	06

Experiment No. 4

Study of I-V Characteristics of Linear Circuits

Objective

The aim of this experiment is to acquaint students with the concept of I-V characteristics. They will find I-V characteristics of some linear components and some circuits consisting linear combinations of them.

Part 1: By Using Multimeter

Theory

I-V characteristics, also known as current-voltage characteristics, describe the relationship between the current flowing through a device/circuitry and the corresponding potential difference (voltage) across it. This concept is commonly used in the field of electronics and electrical engineering to analyze the behavior of various components such as resistors, diodes, transistors, and in general, circuits.

I-V characteristics provide a way to understand how current and voltage interact in electrical and electronic components and circuits. By analyzing these characteristics, circuits/devices can be designed and optimized, appropriate components can be selected, and the behavior of devices under different operating conditions can be predicted.

In hardware labs, studying the I-V characteristics of an element/circuitry can be done in some simple steps. After building the circuit using hardware tools (such as Breadboards, Power Supply), a multimeter or other measuring instruments can be used to measure the voltage and current at specified terminals in the circuit. The multimeter probes can be placed across the component or along the desired path (specified by the terminals) to measure the voltage difference and current flow. To determine the I-V characteristics, the voltage or current across the circuit or specific components must be varied. This can be done by adjusting the power supply voltage, using variable resistors, or changing the values of other circuit parameters. As the voltage or current is varied and the corresponding values are measured, the data can be recorded in a table. The voltage and current values for each point of interest in the circuit should be noted.

Once we have the values of currents and voltages at various points in the circuit, the I-V characteristics can be plotted. Typically, this involves creating a graph with current (I) on the y-axis and voltage (V) on the x-axis.

A circuit is linear if its I-V characteristic is linear, represented by a straight line in an I versus V plot. A circuit composed of linear components (resistors, voltage sources, current sources) has a straight line I-V characteristic.

For a simple resistor, the I-V characteristics follow Ohm's Law, which states that the current passing through a resistor is directly proportional to the voltage applied across it. Mathematically, this relationship can be expressed as $I = \frac{V}{R}$, where I is the current, V is the voltage, and R is the resistance. The characteristic line passes through the origin.

The I-V characteristic of an ideal voltage source (an ideal voltage source is a theoretical concept that maintains a constant voltage across its terminals, regardless of the current flowing through it.) is a vertical line on an I-V graph, indicating that the voltage remains constant (V) regardless of the current (I). Mathematically, it can be represented as $V = constant$. Real life voltage sources (for example, DC power supply in our labs) do not exactly behave this way, but should closely resemble an ideal voltage source. Similarly, an ideal current source has an I-V line parallel to the voltage axis since it supplies a constant current with theoretically any voltages across.

Apparatus

- Multimeter
- Resistors (1 kΩ x 2, 2.2 kΩ, 3.3 kΩ, 4.7 kΩ, 10 kΩ)
- DC power supply
- Breadboard
- Jumper wires

Procedures

- Measure the resistances of the provided resistors and fill up the data table 1.
- Construct the following circuits on a breadboard. Try to use minimum number of jumper wires:

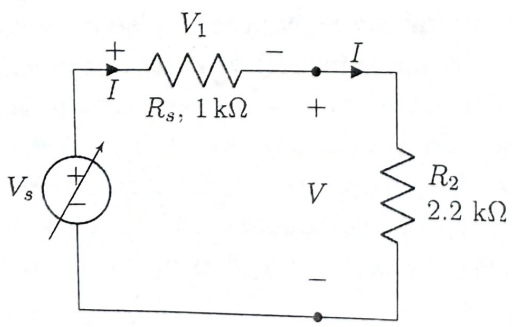

Circuit 1

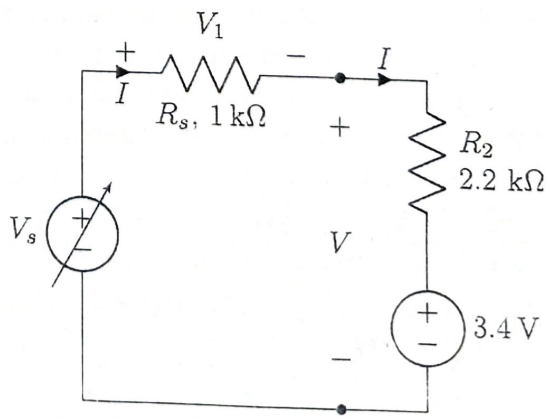

Circuit 2

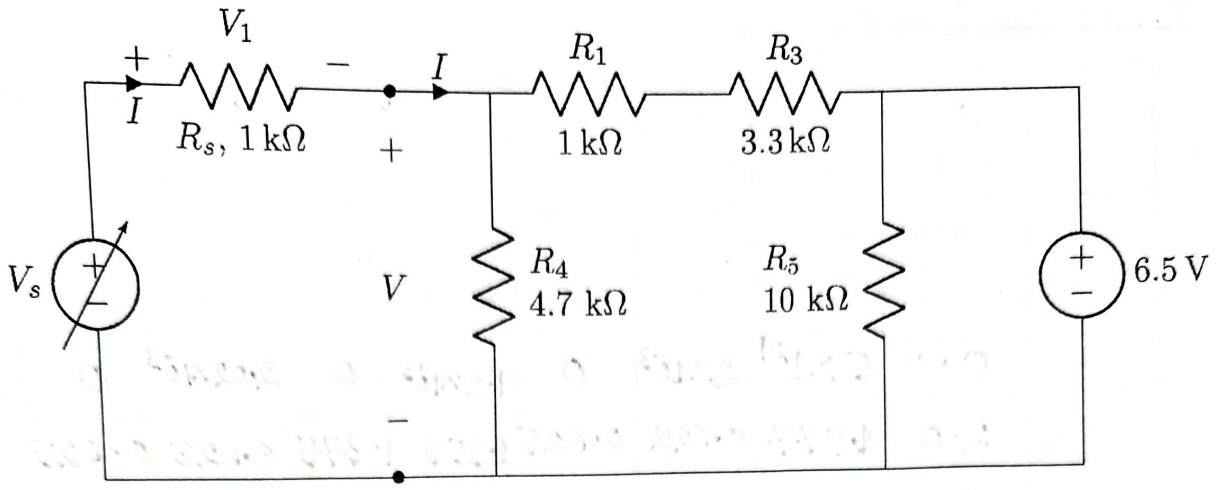

Circuit 3

- For each of these circuits, apply the specified supply voltages (from the first column of their respective data tables) using the DC power supply.
- Measure the voltage, V_1 across the 1 kΩ resistor using the multimeter and use Ohm's law to calculate the current I through the two terminals (denoted by • in the circuits).
- Measure the voltage, V across the two terminals (denoted by • in the circuits) using the multimeter, and fill up the data tables.

Data Tables

Signature of Lab Faculty: [illegible] **Date:** 19-10-23

** ***For all the data tables, take data up to three decimal places, round to two, then enter into the table.***

Table 1: Resistance Data

For all your future calculations, please use the observed values only **(even for theoretical calculations)**.

Notation	Expected Resistance	Observed Resistance (kΩ)	Notation	Expected Resistance	Observed Resistance (kΩ)
R_s	1 kΩ	0.99	R_3	3.3 kΩ	3.21
R_1	1 kΩ	0.99	R_4	4.7 kΩ	4.55
R_2	2.2 kΩ	2.15	R_5	10 kΩ	9.64

R.S =

Table 2: Data from Circuit 1

V_S (V)			V_1 (V)		V (V)		$I = \frac{V_1}{R_s}$ (mA)	
Expected Voltage	From DC power supply	Using multi-meter	Experi-mental	Theo-retical	Experi-mental	Theo-retical	Experi-mental	Theo-retical
0.0	0.0	5×10^{-4}	2×10^{-3}	0	4.2×10^{-3}	0	2.02×10^{-3}	0
2.0	2.0	1.977	0.622	0.625	1.353	1.375	0.628	0.625
4.0	4.0	4.0	1.262	1.25	2.745	2.75	1.27	1.25
6.0								
8.0	8.0	7.99	2.52	2.5	5.47	5.5	2.55	2.5

Plot the values of I and V from the above table.

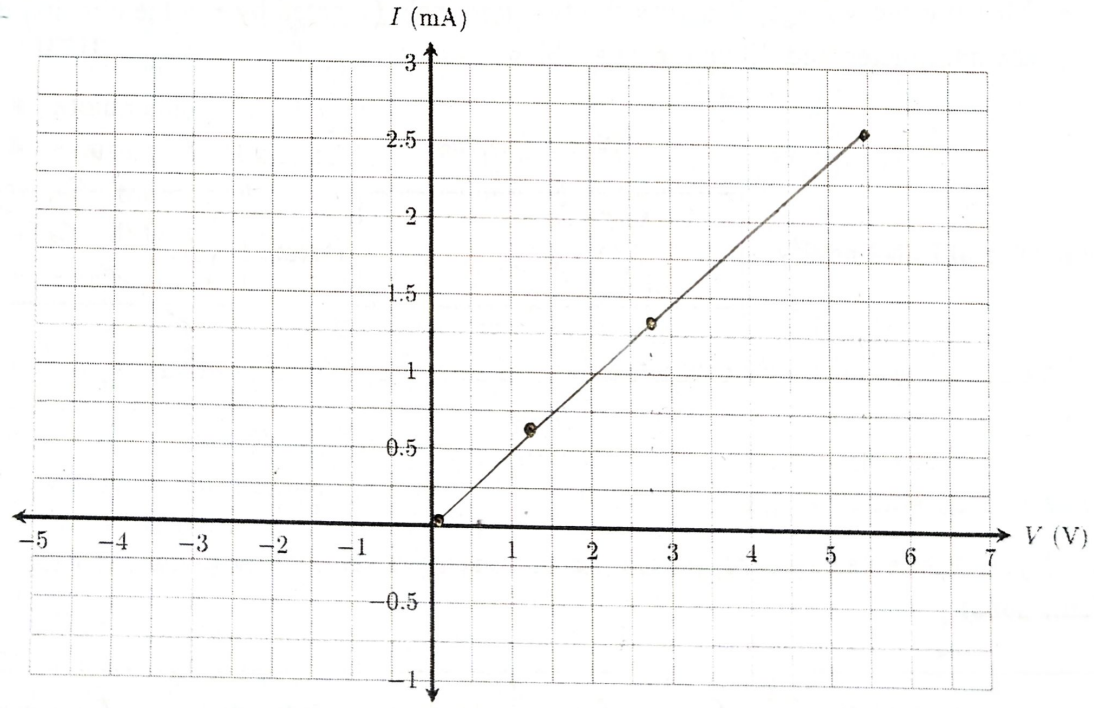

Draw the best-fitting straight line through all the data points.

Slope of the straight line, m = 0.46[redacted]1 $k\Omega^{-1}$

Resistance from the plot, $R_T = \frac{1}{m}$ = 2.1[redacted]68 $k\Omega$

Percentage of Error $= \left|\frac{R_2 - R_T}{R_2}\right| \times 100\%$ = [redacted] 1.45 %

Table 3: Data from Circuit 2

V_S (V)			V_1 (V)		V (V)		$I = \frac{V_1}{R_s}$ (mA)	
Expected Voltage	From DC power supply	Using multi-meter	Experi-mental	Theo-retical	Experi-mental	Theo-retical	Experi-mental	Theo-retical
0.0	0·0	0·78	-0·8	0	1·602	0	-0·8	0
2.0	2·0	1·99	-0·435	-0·43	2·415	2·44	-0·44	-0·437
4.0	4·0	3·95	0·197	0·1875	3·8	3·812	0·198	0·1875
6.0	—	—	—	—	—	—	—	—
8.0	8·0	8·0	1·45	1·4375	6·54	6·56	1·46	1·4375

Plot the values of I and V from the above table.

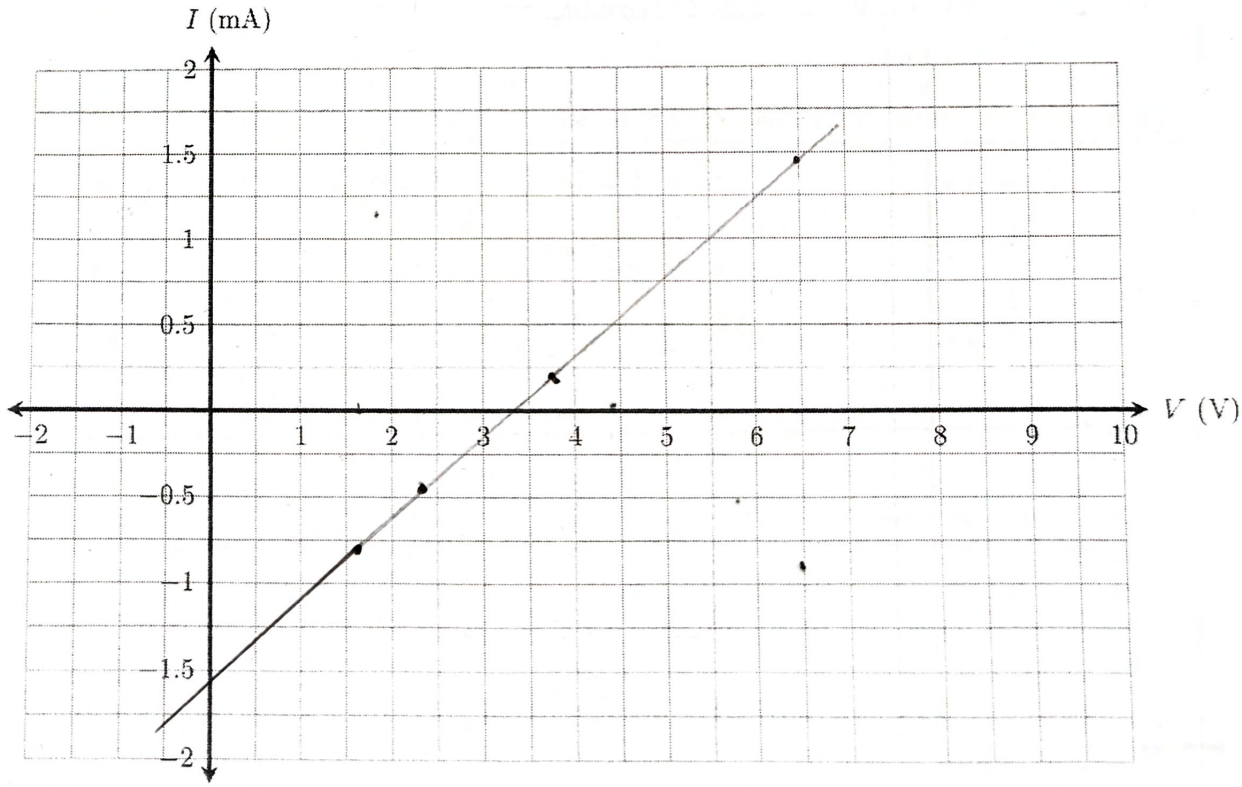

Draw the best-fitting straight line through all the data points.

Slope of the straight line, m = 0·46 kΩ^{-1}

Resistance from the plot, $R_T = \frac{1}{m}$ = 2·17 kΩ

The straight line intersects x-axis at, V_T = 3·35 V

Table 4: Data from Circuit 3

V_S (V)			V_1 (V)		V (V)		$I = \frac{V_1}{R_s}$ (mA)	
Expected Voltage	From DC power supply	Using multi-meter	Experi-mental	Theo-retical	Experi-mental	Theo-retical	Experi-mental	Theo-retical
0.0	0.0	0.774	-0.82	-1.05	1.6	1.05	-0.82	-1.05
2.0	2.0	2.01	-0.42	-0.43	2.45	2.43	-0.42	-0.43
4.0	4.0	4.04	0.19	0.187	3.84	3.81	0.19	0.187
6.0	—	—	—	—	—	—	—	—
8.0	8.0	7.97	1.41	1.42	6.55	6.58	1.43	1.42

Plot the values of I and V from the above table.

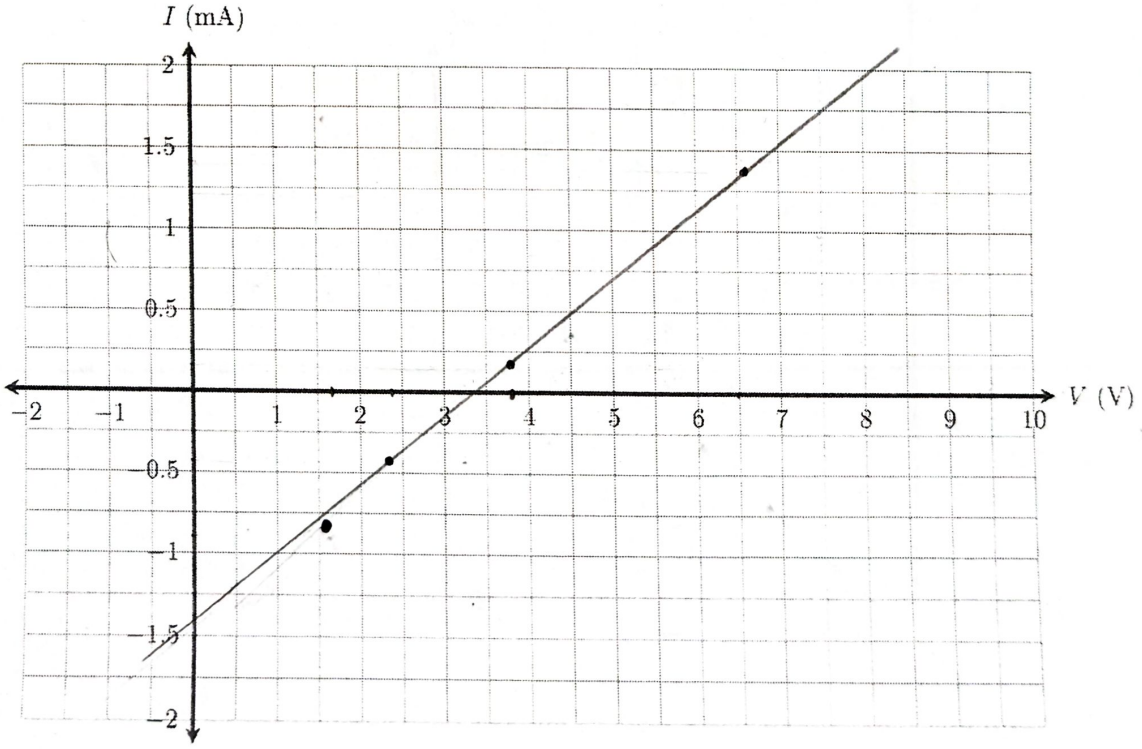

Draw the best-fitting straight line through all the data points.

Slope of the straight line, m = 0.45 $k\Omega^{-1}$

Resistance from the plot, $R_T = \frac{1}{m}$ = $2.2\dot{2}$ $k\Omega$

The straight line intersects x-axis at, V_T = 3.4 V

Questions

1. What conditions must exist for the following two circuits to be equivalent to each other with respect to terminals $a - b$?

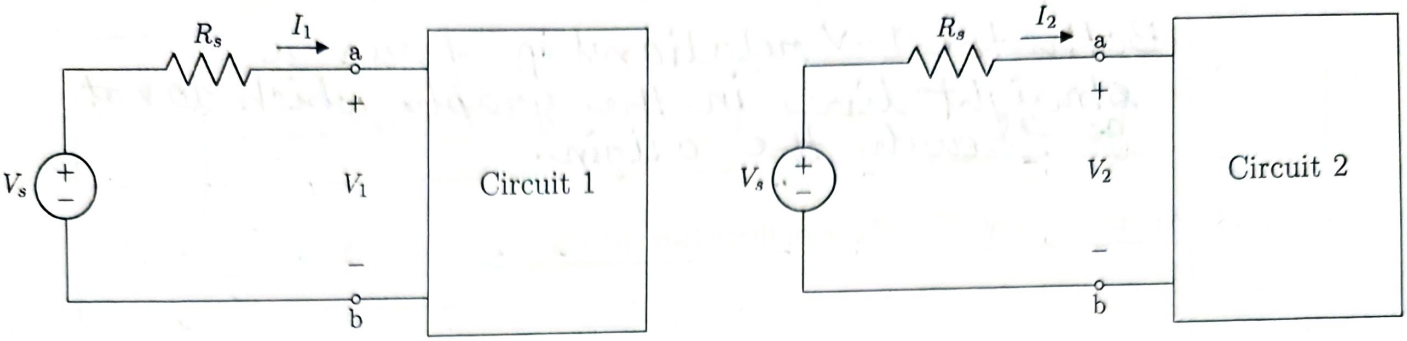

2.

(a) For the **Circuit 2** you constructed in the laboratory, derive a relation between I and V.

~~$I = 0.46V + (-1.2)$~~

~~$I = 0.46V - 1.3$~~

$I = 0.46V - 1.55$

(b) For the **Circuit 3** you constructed in the laboratory, derive a relation between I and V.

$I = 0.45V - 1.35$

(c) Did you notice any similarity between the $I - V$ relationships in (a) and (b)?

☑ Yes ☐ No

If yes, what are they?

Both the I-V relationship form a straight line in the graph which do not go through the origin.

(d) Will it have any effect if one of these two circuits is replaced with the other? Why?

(e) Now, for the following circuit, determine the value of I_x so that the $I - V$ relation matches with those you derived in (a) and (b). Is this circuit also equivalent to **Circuit 2** and **Circuit 3**?

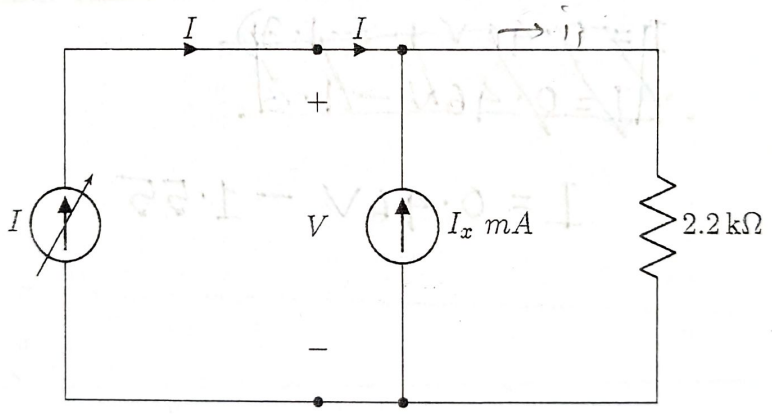

$i_1 = \frac{V}{2.2}$

$i_1 = I + I_x$

3. Can you think of any way where voltage-axis intersecting points (V_T) could be measured directly for Circuit **1** and **Circuit 2**?

By making the overall voltage nil for both circuits, making the current flow zero, then measure across Vs.

4. In general, what is the simplest technique to derive the $I - V$ characteristics of any linear two terminal circuit? How many minimum data points are required?

Simplest technique to derive the I-V characteristics of any linear two terminal circuit is Ohm's law.
Minimum two data points are required.

5. A linear two-terminal circuit has the following $I - V$ relationship at the terminals $a - b$ measured in a laboratory with the setup shown below. Draw (in the next page) a simplified version of the circuit that can give rise to the same $I - V$ as shown. Determine the corresponding parametric values of the circuit elements.

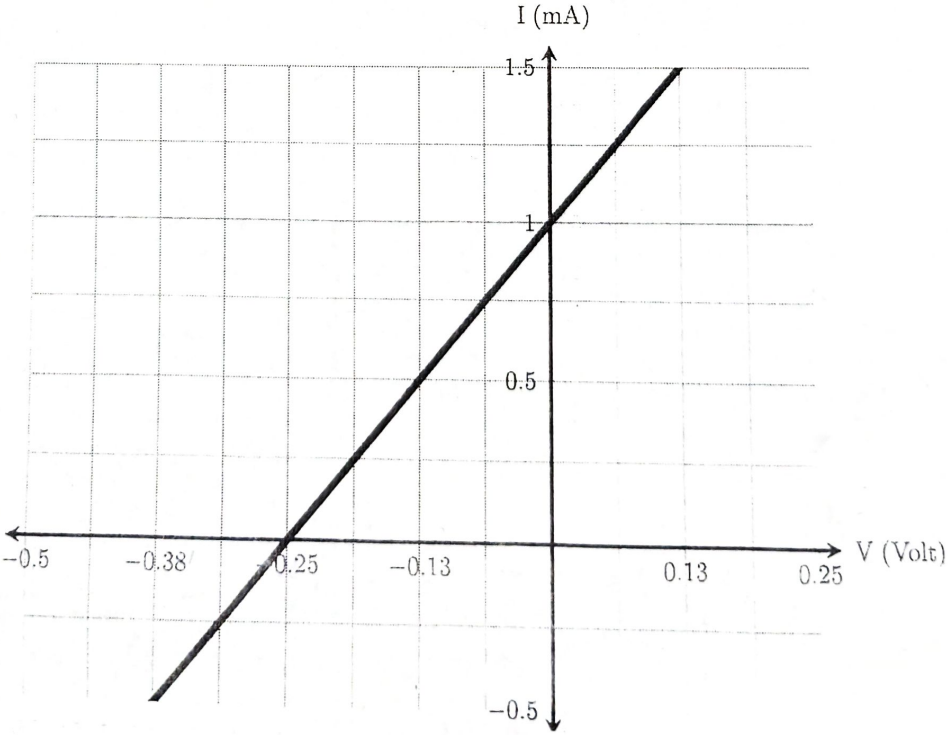

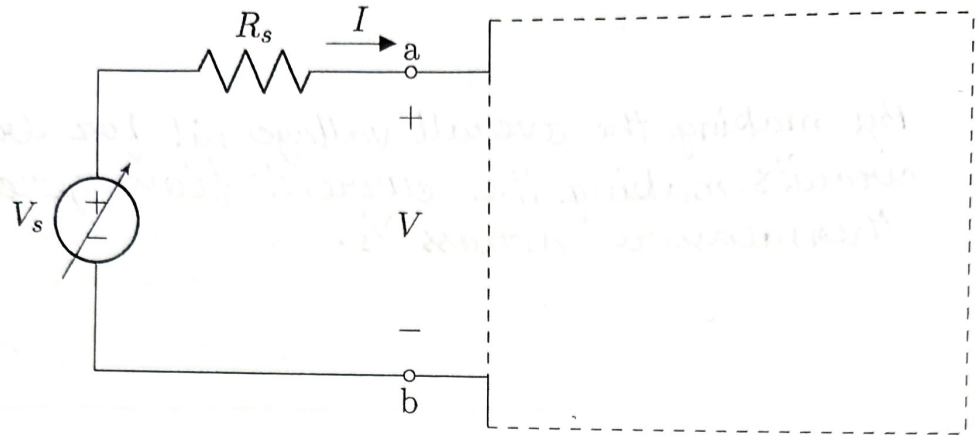

Draw inside the dashed box

Part 2: By Using Oscilloscope

Theory

Oscilloscope

Oscilloscope is a device that can measure a sequence of voltages over time and can display that information by plotting them on a screen. In fact, oscilloscopes available at our labs are dual channel (**CH1** and **CH2**), meaning, they can simultaneously show voltage vs time graph across two separate set of nodes.

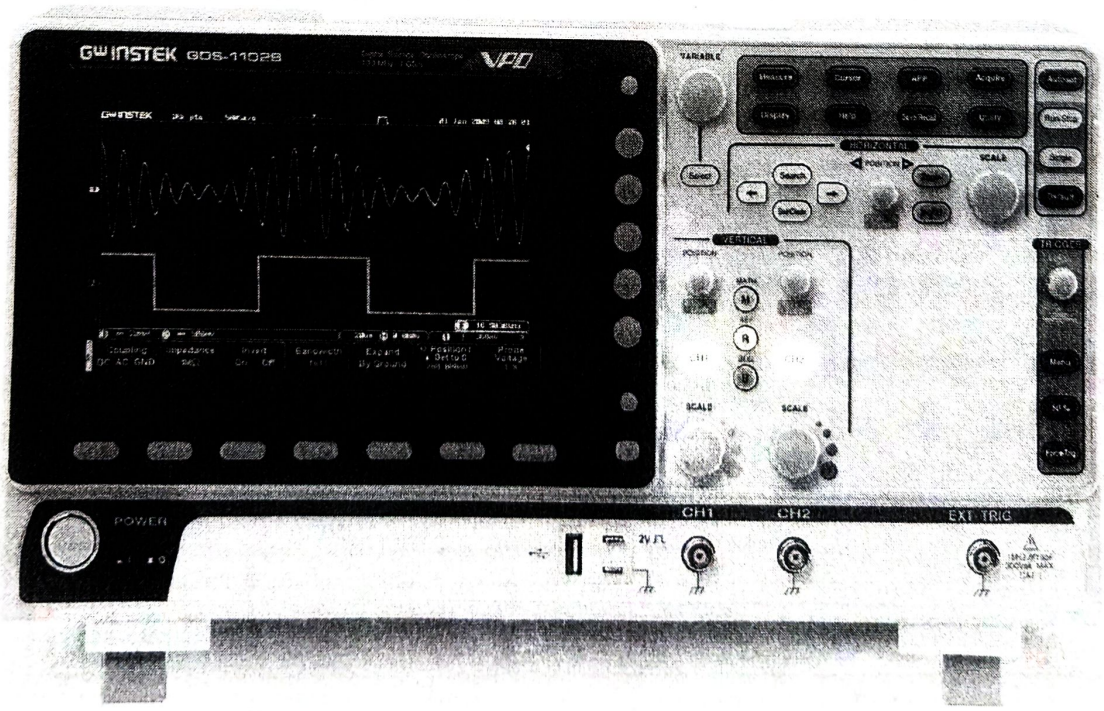

An oscilloscope

In the default mode, an oscilloscope can show 2 separate graphs (yellow and blue) where the common x-axis for both of the graphs is **time** and y-axis for the **yellow** graph is the voltage measured at **CH1** and the **blue** graph is the voltage measured at **CH2**.

However, there is another mode called the **"XY" mode** where we can plot voltage from **CH1** on the x-axis vs voltage from **CH2** on the y-axis. This is exactly how we can plot I-V characteristics on an oscilloscope. If we connect the voltage, V across the two terminals to **CH1** and the measure the current I on **CH2**, we could plot the I-V characteristics. However, oscilloscopes can only measure voltages. This can easily be done using a 1 kΩ resistor since the voltage (in volts) across a 1 kΩ resistor is equivalent to the current (in milliApmeres) through that resistor.

There is another hurdle to overcome regarding the negative terminals of the two oscilloscope channels. Although they seem separate, in actuality, the two negative terminals are internally shorted. Hence, we need to connect only one of the negative terminals. But this is a challenge since we may want the inverted voltages. This can be easily done through the GUI by pressing the channel buttons. For example, if we want to invert **CH1**, it can be done by press the glowing **CH1** button and then turning **On** "**Invert**" mode (detailed procedures are discussed later).

Function Generator

Function generator is a device that can generate various shapes of electrical waveforms. We can produce signals of different frequencies, amplitudes, and wave shapes, such as sine waves, square waves, triangular waves etc.

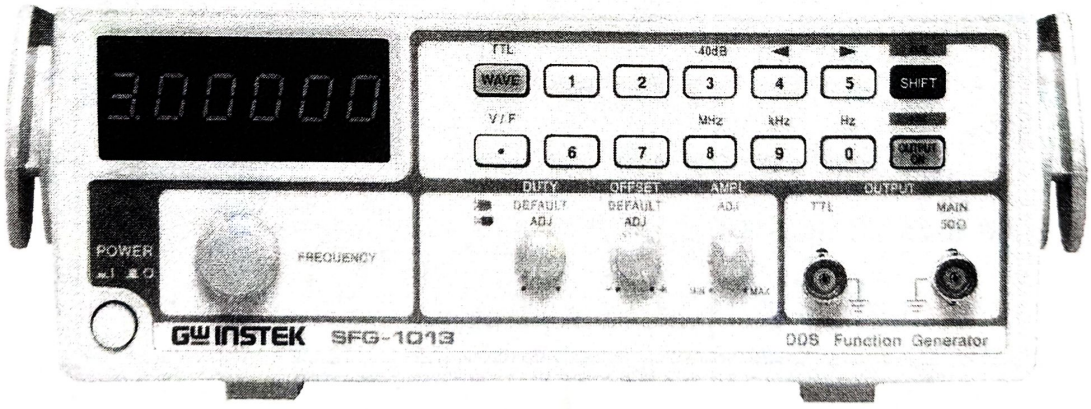

A Function Generator

In the previous part, we collected data using a multimeter and the supply voltage was changed with a knob on the DC power supply. However, an oscilloscope samples thousands to millions of data point per second. So, manually adjusting the supply voltage is not possible. However, for that, we may use a function generator that creates a 1 kHz signal of the maximum amplitude (10 V) as the supply voltage V_S.

Apparatus

- Oscilloscope
- Function Generator
- DC power supply
- A 100 kΩ potentiometer
- Light Dependent Resistors (LDRs)
- Breadboard
- Jumper wires

Procedures

- Construct the following circuits on a breadboard. Try to minimize the number of jumper wires in your circuit:

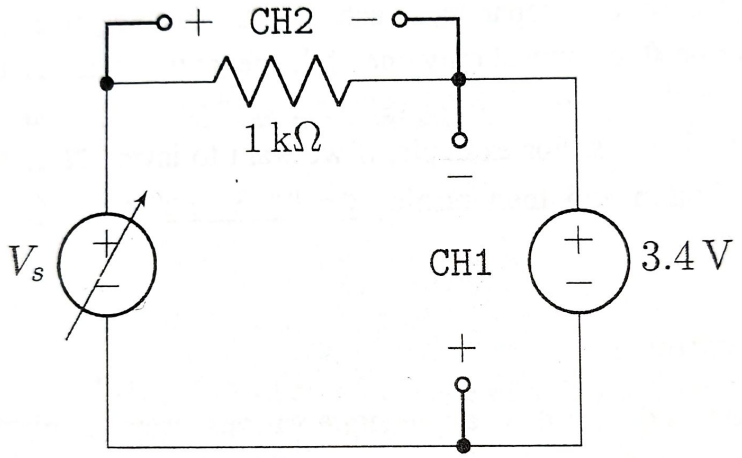

Circuit 4 (DC Voltage Source)

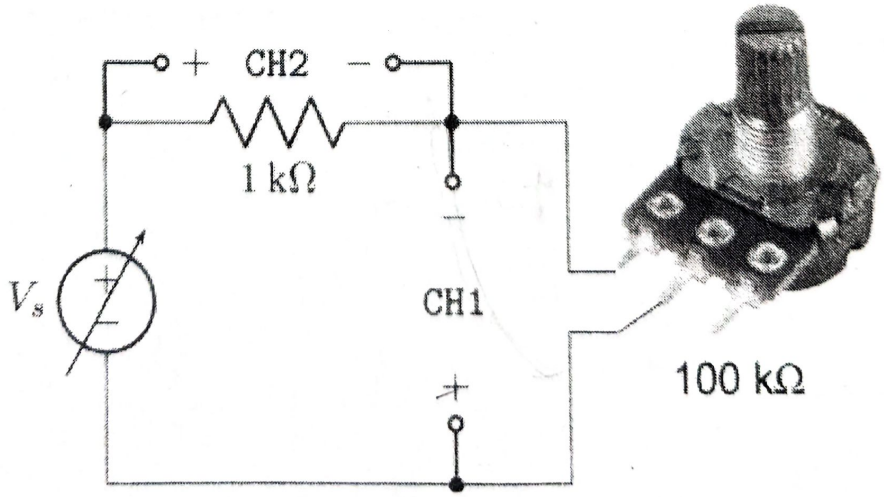

Circuit 5 (Potentiometer)

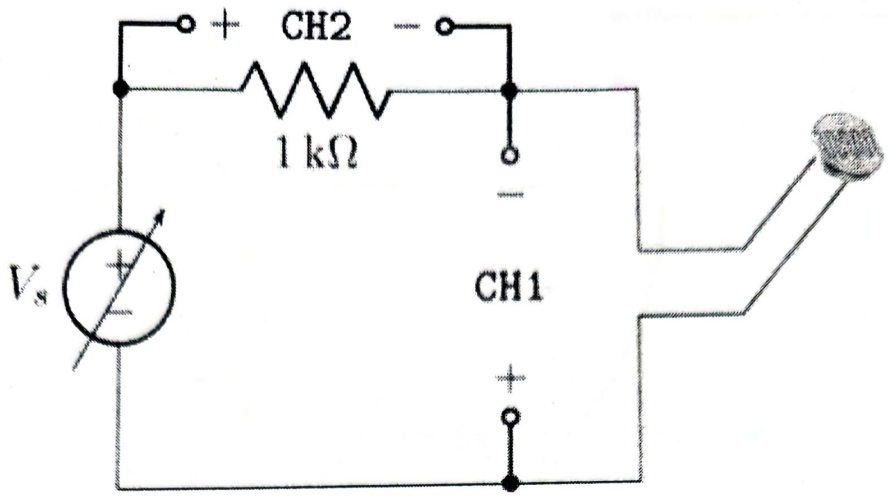

Circuit 6 (LDR)

- Setup the **function generator**:
  - Connect the positive and negative terminals of the function generator according to the positives and negatives of the supply voltage V_S.
  - Make sure the **DUTY** and **OFFSET** adjustment knobs are **<u>pushed in</u> (default mode).**

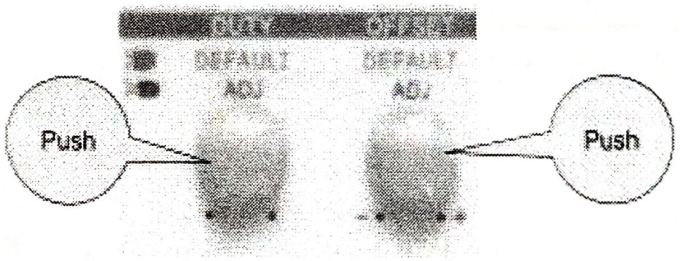

  - Set the **AMPL** (amplitude) adjustment knob to the **MAX** position.

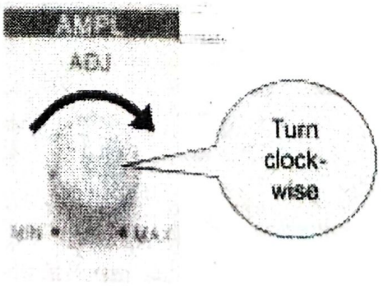

  - Turn **<u>on</u>** the **output**.

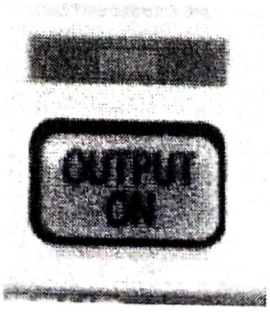

- Setup the **oscilloscope**:
  - Connect the channels of the oscilloscope as demonstrated in this figure:

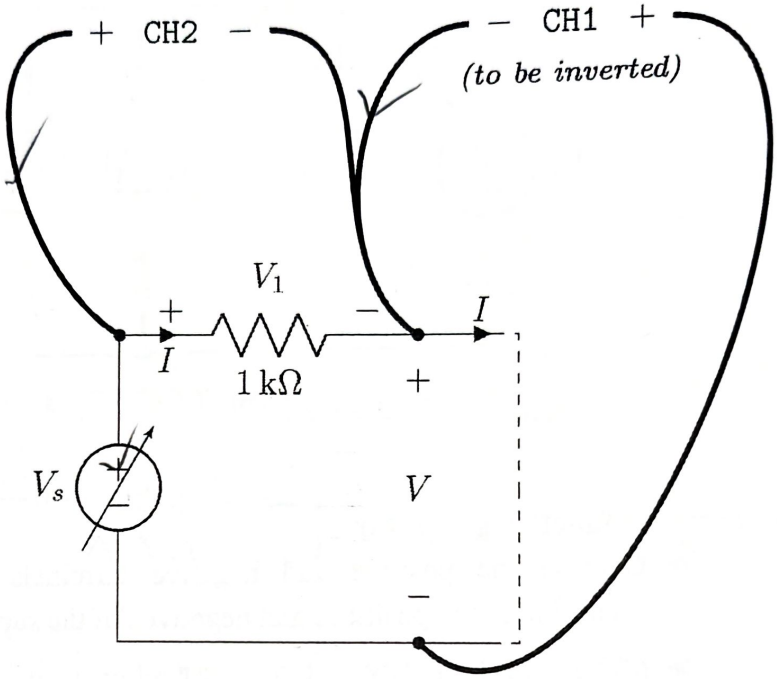

Connecting oscilloscope channels

- Set the oscilloscope probe scaling to **1x** (not 10x).

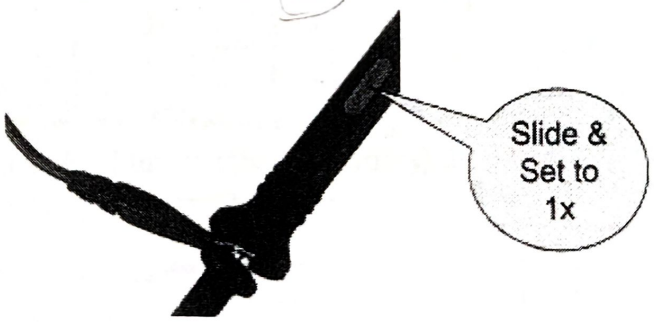

- Make sure both channels are turned on. These buttons should be glowing:

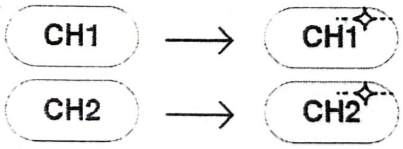

- Invert **CH1** by pressing the bottom menu buttons and set it to **On**.

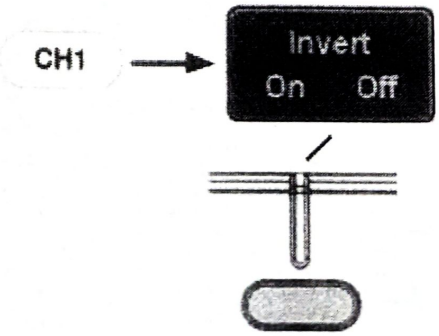

➢ Go to **XY** Mode:

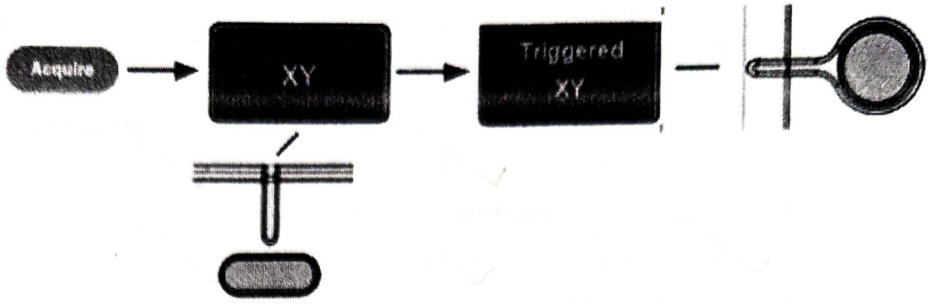

➢ Set position to origin by **pushing** the **position knobs** on each channel.

➢ Turn both channel knobs so that the voltage resolutions are at **2V per division.**

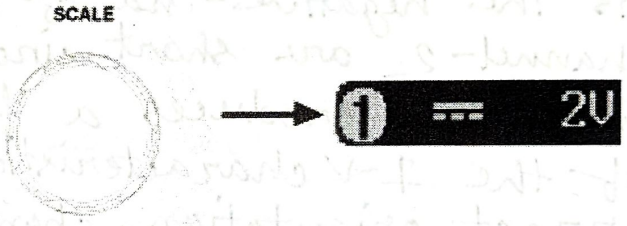

Questions

6.

(a) In normal mode of operation, an oscilloscope always plots -

☑ voltage as a function of time ☐ current as a function of time

(b) In X-Y mode of operation, an oscilloscope plots Channel-1 along the -

☐ y-axis ☑ x-axis

(c) Is there any way to observe the one you haven't selected in (a)?

A current probe or a shunt resistor can be used. The current probe can be clamped around a wire and it can transform the current flow into readable voltage signal. Placing a shunt resistor in series with the load can help measure the voltage drop across it, giving an indirect current reading since the drop is proportional to current.

7. Put a checkmark beside the correct answers:

a. The I-V characteristics of the following circuits were **straight lines** -

☑ Circuit 4 ☑ Circuit 5 ☑ Circuit 6

b. The I-V characteristics of the following circuits went **through origin** -

☐ Circuit 4 ☑ Circuit 5 ☑ Circuit 6

c. The following circuits were **equivalent to a resistor** -

☑ Circuit 4 ☑ Circuit 5 ☑ Circuit 6

d. When the LDR was completely **in darkness**, the I-V characteristic line was -

☐ y-axis ☑ x-axis ☐ parallel to x-axis but shifted upwards

e. When the LDR was completely **in darkness**, it was equivalent to -

☑ short circuit ☑ open-circuit ☐ 1 kΩ resistor ☑ 0A current source

8. Why was it necessary to invert Channel-2 of the Oscilloscope in order to visualize the *I vs. V* plot of **Circuit 4, 5,** and **6**?

As the negative-end of channel-1 and channel-2 are short circuited, the channel-1 produces a flipped representation of the I-V characteristics. To get the correct orientation, channel-1 needs to be inverted.

9. Draw the waveforms that should be observed in Channel-1 and Channel-2 of an oscilloscope when both the channels are ON and are connected in a setup shown below. Draw both the plots in the same template given below. Mark the waveforms according to their visualizing channel.

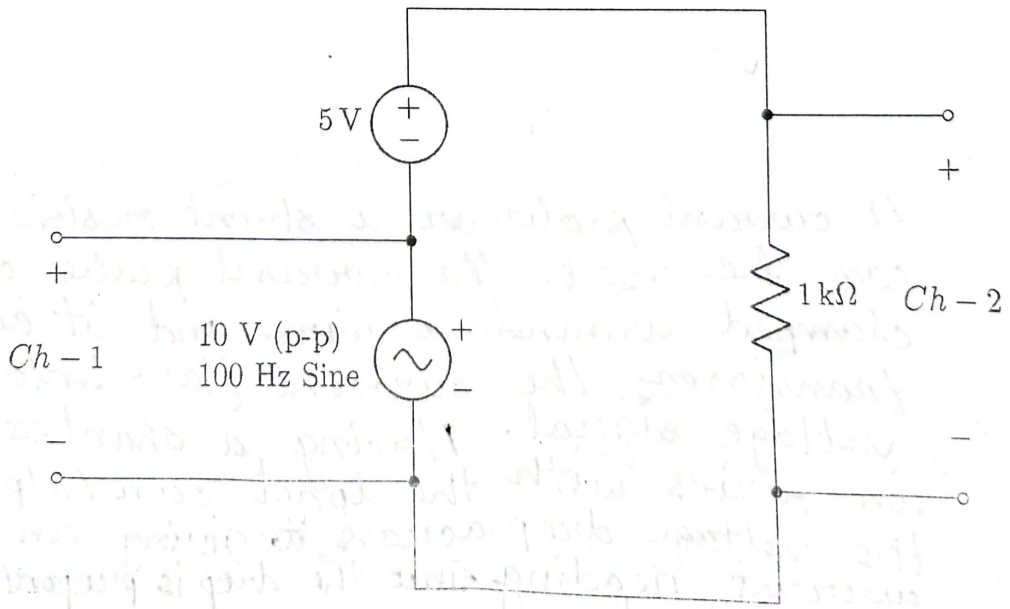

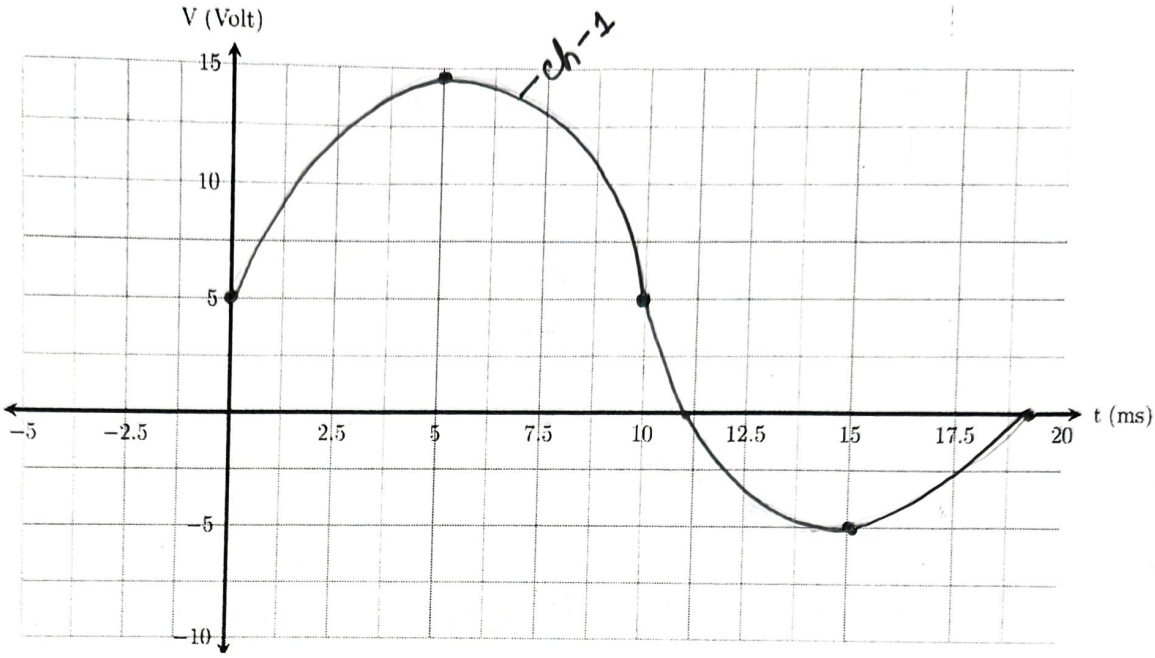

Report

1. Fill up the theoretical parts of all the data tables.
2. Answer to the questions.
3. Attach the captured images of the $I - V$ plot observed in oscilloscope for **Circuits 4, 5, and 6**.
4. Discussion *[comment on the obtained results and discrepancies]*. Start writing from below the line.

The obtained slope from circuit-1, 2, 3 was found from multiple data points and the resistance of circuit-1 was near to accurate with an error of 1.45%. The circuit-2, circuit-1 and circuit-3 all of them were straight lines. Circuit-1 went through the origin, Circuit-2 and Circuit-3 both intercepted x-axis and y-axis respectively. A few data points were misplaced due to human error but end results error was negligible.

Circuit-4 I-V characteristics was found to be a vertical straight line, Circuit-5 I-V characteristics was a straight line which went through the origin and the circuit-6 I-V characteristics line also went through the origin.

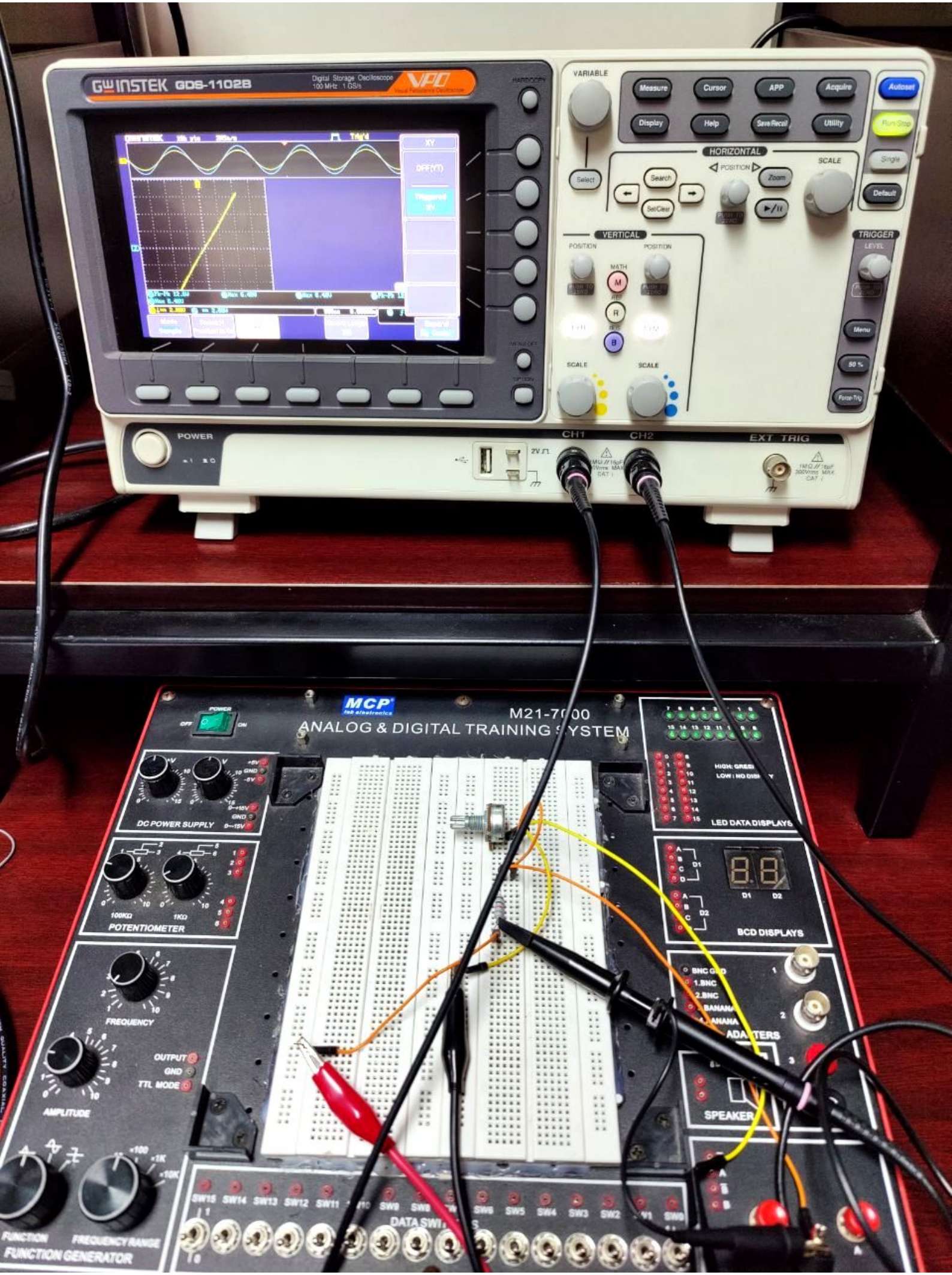
GW INSTEK GDS-1102B
Digital Storage Oscilloscope
100 MHz 1 GS/s
VARIABLE
Measure
Cursor
APP
Acquire
Display
Help
Save/Recall
Utility
Autoset
Run/Stop
Single
Default
HORIZONTAL
POSITION
SCALE
Search
Zoom
Select
Set/Clear
VERTICAL
TRIGGER
LEVEL
Menu
50 %
Force-Trig
POWER
CH1
CH2
EXT TRIG
MCP
M21-7000
ANALOG & DIGITAL TRAINING SYSTEM
DC POWER SUPPLY
POTENTIOMETER
FREQUENCY
AMPLITUDE
OUTPUT
GND
TTL MODE
FUNCTION
FREQUENCY RANGE
FUNCTION GENERATOR
LED DATA DISPLAYS
BCD DISPLAYS
ADAPTERS
SPEAKER
DATA SWITCHES

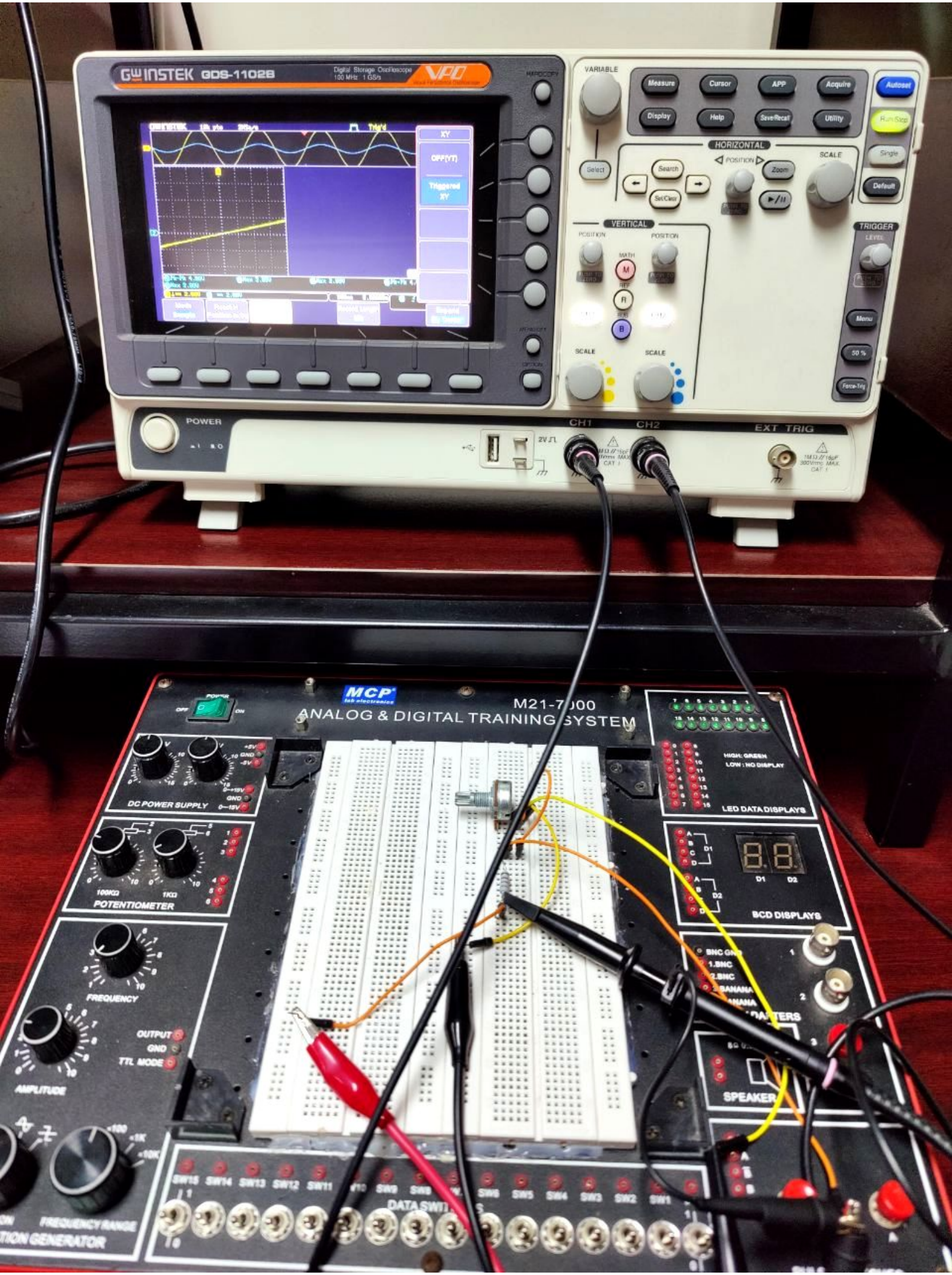
GW INSTEK GDS-1102B
Digital Storage Oscilloscope
100 MHz 1 GS/s
VARIABLE
Measure
Cursor
APP
Acquire
Display
Help
Save/Recall
Utility
Autoset
Run/Stop
Single
Default
HORIZONTAL
POSITION
SCALE
Search
Zoom
Select
Set/Clear
VERTICAL
TRIGGER
LEVEL
Menu
50 %
Force-Trig
POWER
CH1
CH2
EXT TRIG
MCP
lab electronics
M21-7000
ANALOG & DIGITAL TRAINING SYSTEM
DC POWER SUPPLY
POTENTIOMETER
FREQUENCY
AMPLITUDE
OUTPUT
GND
TTL MODE
FREQUENCY RANGE
HIGH: GREEN
LOW : NO DISPLAY
LED DATA DISPLAYS
BCD DISPLAYS
SPEAKER
DATA SWITCHES

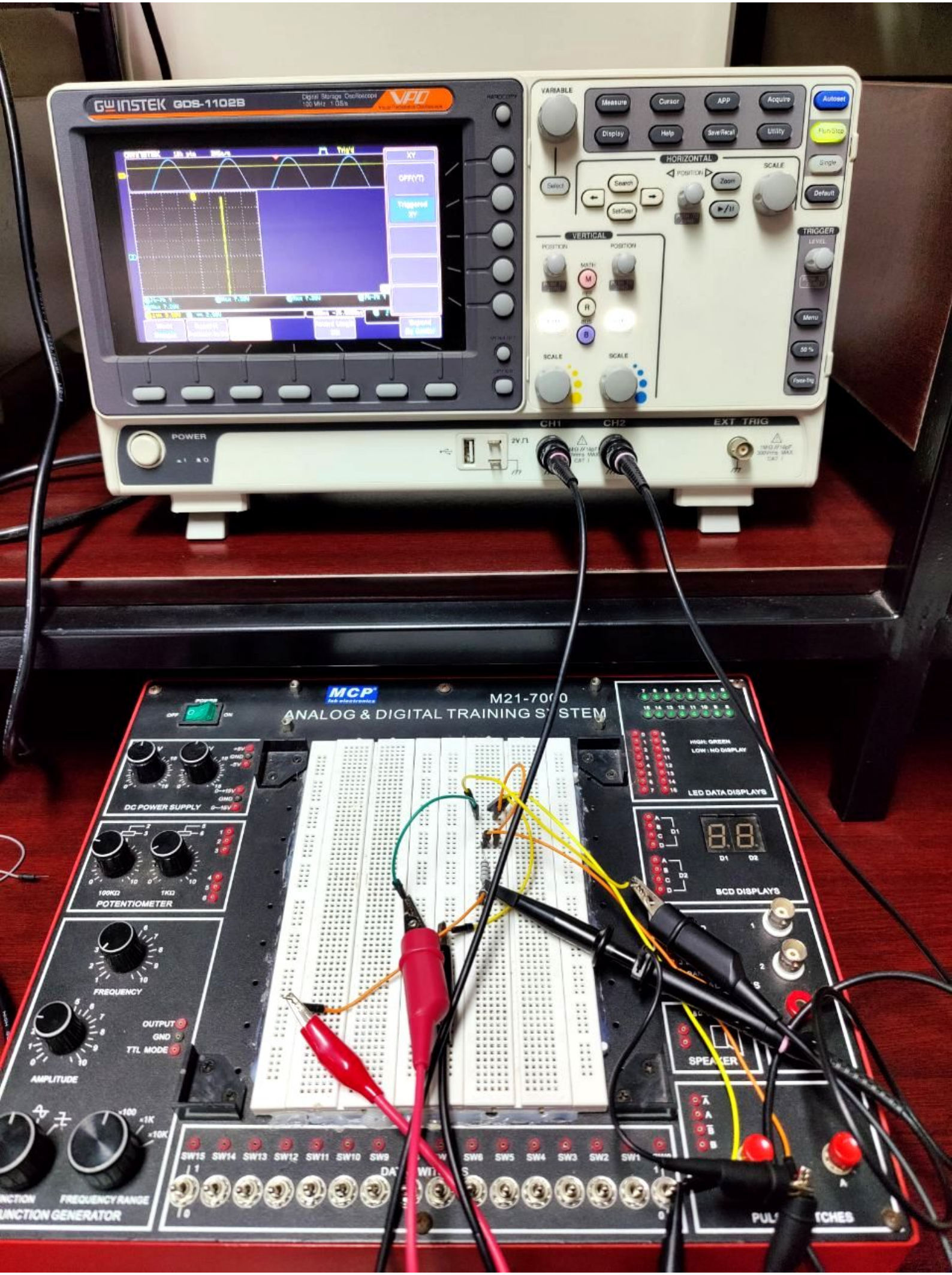
GW INSTEK GDS-1102B
Digital Storage Oscilloscope
100 MHz 1 GS/s
VARIABLE
Measure
Cursor
APP
Acquire
Display
Help
Save/Recall
Utility
Autoset
Run/Stop
Single
Default
HORIZONTAL
POSITION
SCALE
Search
Set/Clear
Zoom
VERTICAL
POSITION
MATH
SCALE
TRIGGER
LEVEL
Menu
50 %
Force-Trig
POWER
CH1
CH2
EXT TRIG
MCP
lab electronics
M21-7000
ANALOG & DIGITAL TRAINING SYSTEM
DC POWER SUPPLY
POTENTIOMETER
100KΩ
1KΩ
FREQUENCY
AMPLITUDE
OUTPUT
GND
TTL MODE
FREQUENCY RANGE
FUNCTION GENERATOR
HIGH: GREEN
LOW : NO DISPLAY
LED DATA DISPLAYS
BCD DISPLAYS
D1
D2
SPEAKER
SW15
SW14
SW13
SW12
SW11
SW10
SW9
SW6
SW5
SW4
SW3
SW2
SW1

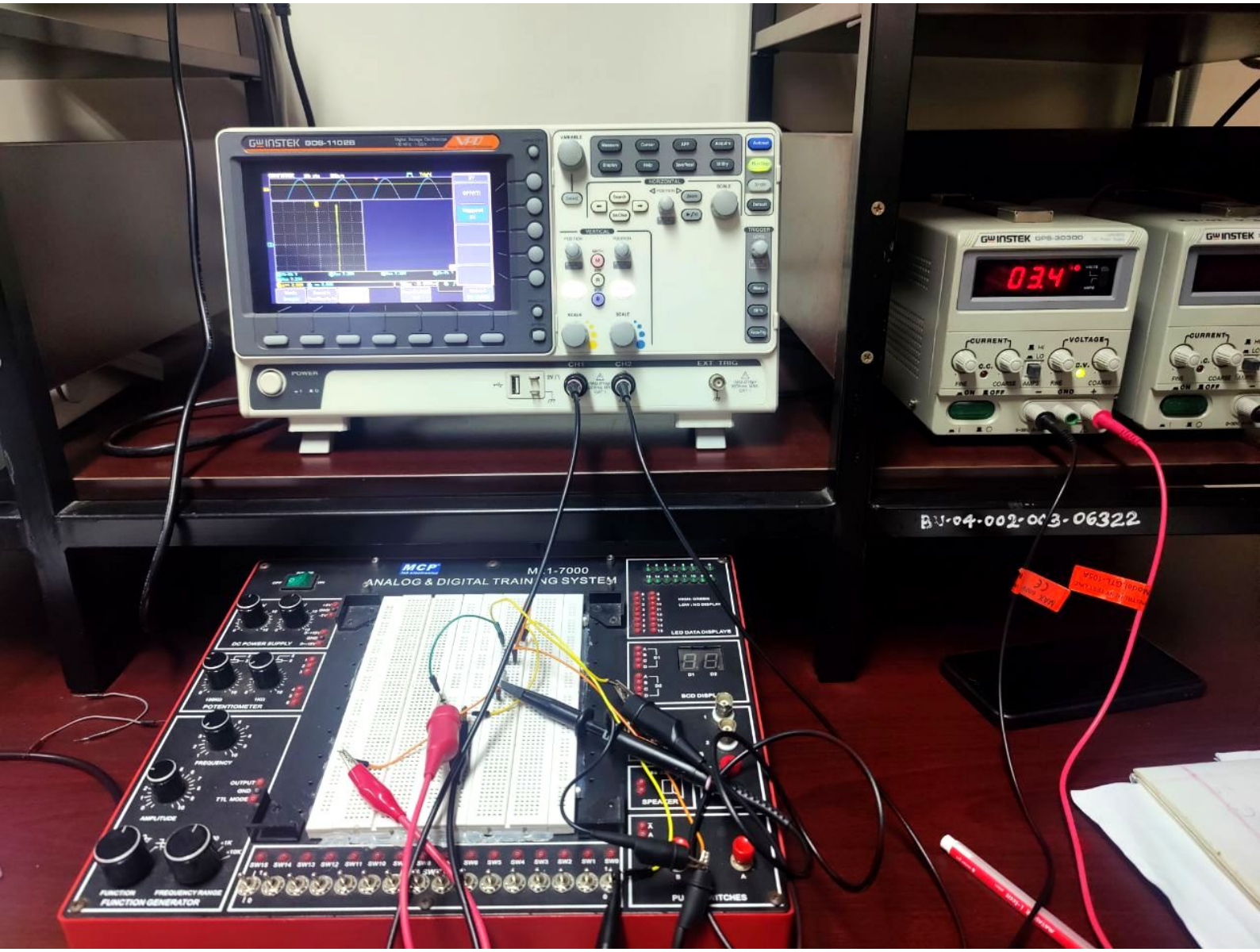
GW INSTEK GDS-1102B
GW INSTEK GPS-3030D
CURRENT
VOLTAGE
BN-04-002-003-06322
MCP
ANALOG & DIGITAL TRAINING SYSTEM
DC POWER SUPPLY
POTENTIOMETER
FREQUENCY
AMPLITUDE
FUNCTION GENERATOR
LED DATA DISPLAYS
SPEAKER

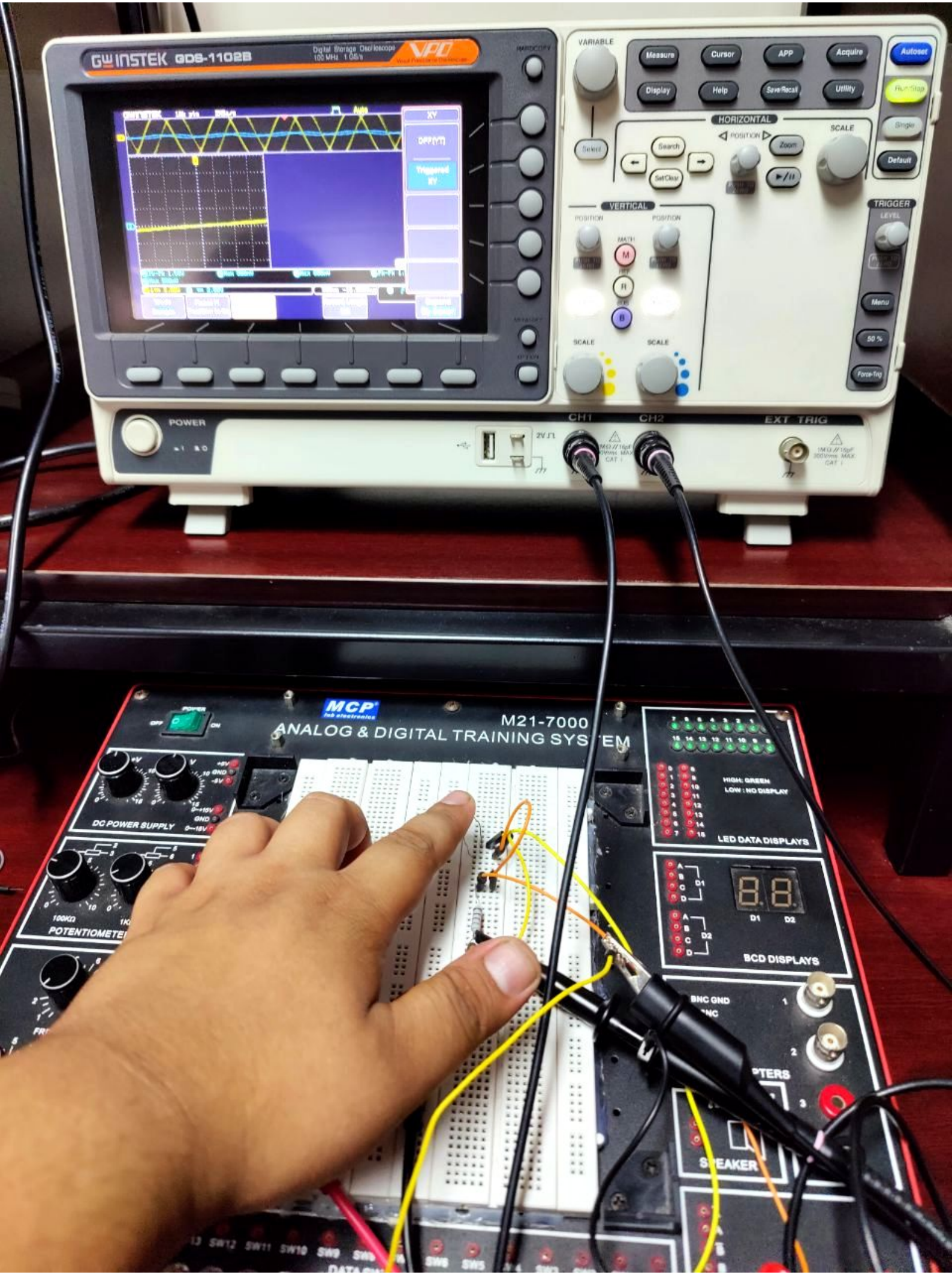
GW INSTEK GDS-1102B
Digital Storage Oscilloscope
100 MHz 1 GS/s
VARIABLE
Measure
Cursor
APP
Acquire
Display
Help
Save/Recall
Utility
Autoset
Run/Stop
Single
Default
HORIZONTAL
POSITION
SCALE
Search
Zoom
Set/Clear
VERTICAL
TRIGGER
LEVEL
Menu
50 %
Force-Trig
POWER
CH1
CH2
EXT TRIG
MCP
M21-7000
ANALOG & DIGITAL TRAINING SYSTEM
DC POWER SUPPLY
POTENTIOMETER
HIGH: GREEN
LOW : NO DISPLAY
LED DATA DISPLAYS
BCD DISPLAYS
BNC GND
SPEAKER

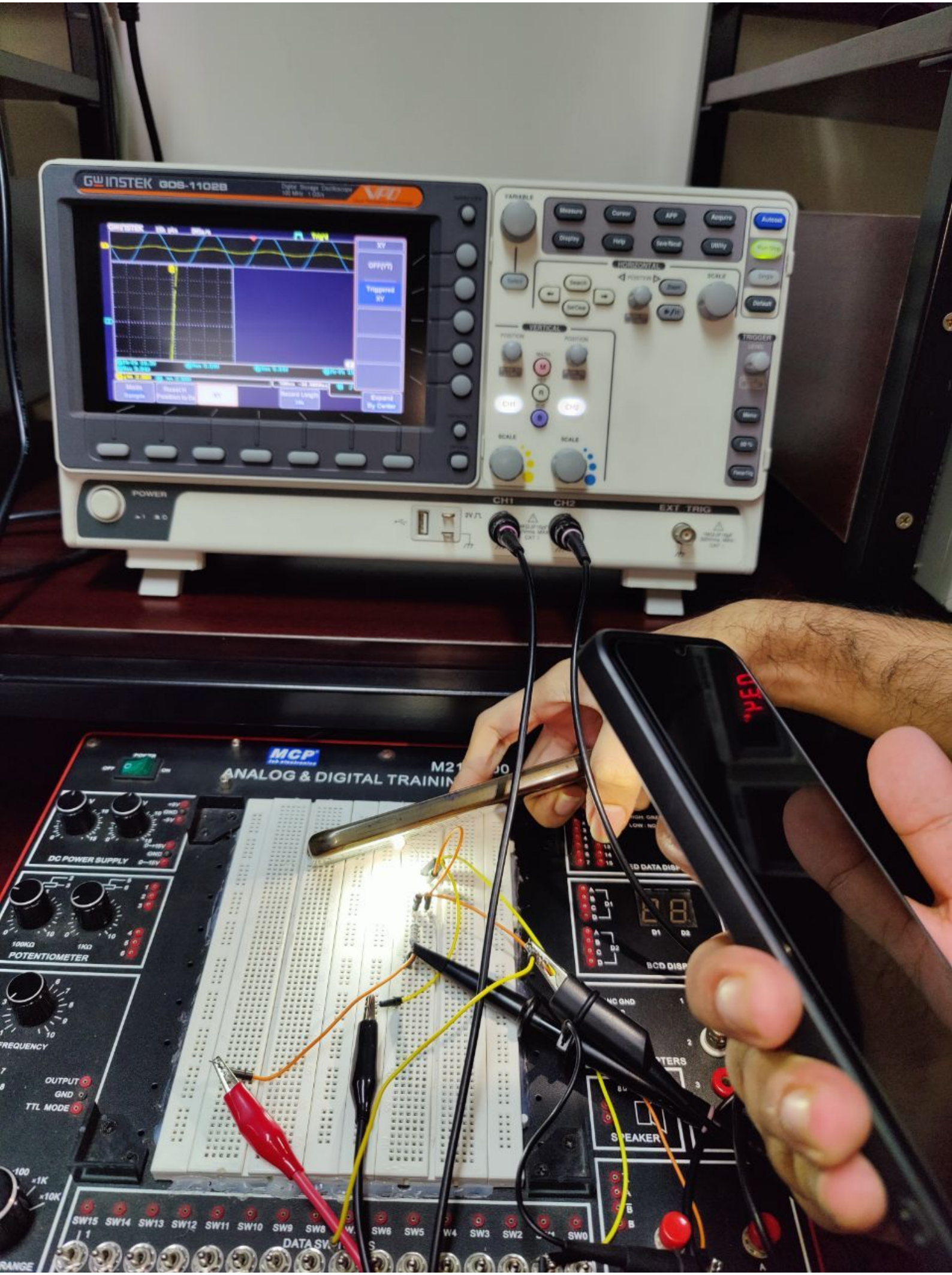
GW INSTEK GDS-1102B
POWER
CH1
CH2
EXT TRIG
MCP
ANALOG & DIGITAL TRAINING
DC POWER SUPPLY
POTENTIOMETER
FREQUENCY
OUTPUT
GND
TTL MODE
SPEAKER
SW15 SW14 SW13 SW12 SW11 SW10 SW9 SW8 SW6 SW5 SW4 SW3 SW2 SW0
DATA SW
μFD