BRAC UNIVERSITY
Dept. of Computer Science and Engineering

CSE250L
Circuits and Electronics Laboratory

Student ID:	22201574	**Lab Section:**	31
Name:	Syeda Maliha Tabassum	**Lab Group:**	6

Experiment No. 2

Verification of KVL & KCL

Objective

The aim of this experiment is to use multi-loops and various branch circuits to verify Kirchhoff's voltage law (KVL) and Kirchhoff's current law (KCL).

Apparatus

- Multimeter
- Resistors ($1\ k\Omega$ x 2, $2.2\ k\Omega$, $3.3\ k\Omega$, $4.7\ k\Omega$).
- DC power supply
- Breadboard
- Jumper wires

Part 1: KVL

Theory

KVL stands for Kirchhoff's Voltage Law, which is a fundamental principle used in electrical engineering and physics. **It states that the sum of all the voltages in a closed loop in a circuit is equal to zero** (Alternatively, it can be said that around any closed circuit the algebraic sum of the voltage rises equals the algebraic sum of the voltage drops).

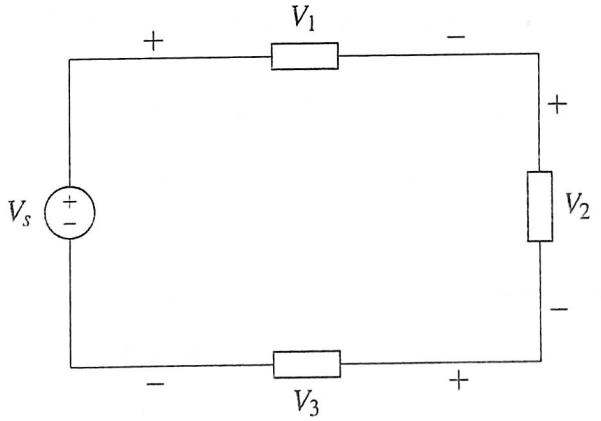

Figure 1: Illustration of KVL

To illustrate KVL, consider Fig. 1. The sign on each voltage is the polarity of the terminal encountered first as we travel around the loop. Let us start with the voltage source and go around the top, then voltages would be $-V_s + V_1 + V_2 + V_3$. Thus, KVL yields,

$$\sum \Delta V = -V_s + V_1 + V_2 + V_3 = 0$$

$$\Rightarrow V_s = V_1 + V_2 + V_3$$

Which can be interpreted as,

Sum of voltage rises = Sum of voltage drops

Procedures

- Measure the resistances of the provided resistors and fill up the data table.
- Construct the following circuit on a breadboard. Try to use minimum number of jumper wires:

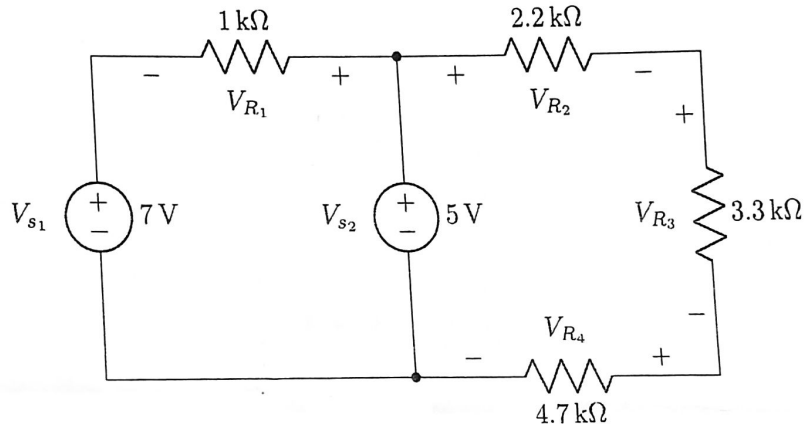

Circuit 1

- Measure the voltage across each resistor ($V_{R_1}, V_{R_2}, V_{R_3}, V_{R_4}$) as shown in the figure above. Fill up the data tables.
- Verify KVL as $\sum \Delta V = 0$ for each loop (take the polarity of the resistors clockwise).

For the left sided loop, $\sum \Delta V = -V_{s_1} - V_{R_1} + V_{s_2}$

For the right sided loop, $\sum \Delta V = -V_{s_2} + V_{R_2} + V_{R_3} + V_{R_4}$

- Calculate the theoretical values of $V_{R_1}, V_{R_2}, V_{R_3}, V_{R_4}$ and note them down in the 'Theoretical Observation' row in Table 2 & 3. For $V_{R_2}, V_{R_3}, V_{R_4}$ use the *Voltage Divider Rule*. Relevant formulas are given below for your convenience:

$$V_{R_1} = V_{s_1} - V_{s_2} \qquad V_{R_2} = \frac{R_2}{R_s} \times V_{s_2} \qquad V_{R_3} = \frac{R_3}{R_s} \times V_{s_2}$$

$$V_{R_4} = \frac{R_4}{R_s} \times V_{s_2} \qquad \text{where, } R_s = R_2 + R_3 + R_4$$

Data Tables

Signature of Lab Faculty: [illegible] **Date:** 12-10-23

** *For all the data tables, take data up to three decimal places, round to two, then enter into the table.*

Table 1: Resistance Data

For all your future calculations, please use the observed values only **(even for theoretical calculations)**.

Notation	Expected Resistance	Observed Resistance (kΩ)
R_1	1 kΩ	0.981
R_2	2.2 kΩ	2.14
R_3	3.3 kΩ	3.2
R_4	4.7 kΩ	4.45

Table 2: Data for Loop 1 (Left sided loop)

In the following table, V_{R1} is the voltage drop across resistor R_1. Similar syntax applies to remaining resistors. Also, calculate the percentage of error between experimental and theoretical values of $\sum\Delta V$.

Observation	V_{s_1} (V) (from dc power supply)	V_{s_1} (V) (using multimeter)	V_{s_2} (V) (from dc power supply)	V_{s_2} (V) (using multimeter)	V_{R_1} (V)	$\sum\Delta V = -V_{s_1} - V_{R_1} + V_{s_2}$ (V)
Experimental	7	7.01	5	4.98	−2.036	6×10^{-3}
Theoretical					−2	0

Absolute error = | *Experimental value* − *Theoretical value* |

Here, Absolute error in $\sum\Delta V$ calculation = 0.006

Table 3: Data for Loop 2 (Right sided loop)

In the following table, V_{R_2} is the voltage drop across resistor R_2. Similar syntax applies to remaining resistors. Also, calculate the percentage of error between experimental and theoretical values of $\sum\Delta V$.

Observation	V_{s_2} (V) (from dc power supply)	V_{s_2} (V) (using multimeter)	V_{R_2} (V)	V_{R_3} (V)	V_{R_4} (V)	$\sum\Delta V = -V_{s_2} + V_{R_2} + V_{R_3} + V_{R_4}$ (V)
Experimental	5	4.98	1.07	1.62	2.29	0
Theoretical			1.08	1.62	2.3	0

Here, Absolute error in $\sum\Delta V$ calculation = 0

Questions

1. Let us take a look at **Circuit 1** again. If we remove the 5V voltage source (V_{s_2}) from the middle, the remaining circuitry contains only one big loop (often referred to as the outer loop). Let us examine if KVL holds true for the outer loop too.

(a) Do you think KVL will be applicable to the outer loop?

☑ Yes ☐ No

Justify your answer.

As the outer loop is a closed loop and there is no open end or open circuit present, KVL will be applicable for the outer loop

(b) Use the values of $V_{R_1}, V_{R_2}, V_{R_3}, V_{R_4}, V_{s_1}$ from Tables 2 & 3 to verify your answer from the above question.

$$\sum\Delta V = -V_{s_1} - V_{R_1} + V_{R_2} + V_{R_3} + V_{R_4} =$$ 0.006

Did KVL hold true for the outer loop?

☑ Yes ☐ No

Here, absolute error in $\sum\Delta V$ calculation = 0.006

2. For the following circuit,

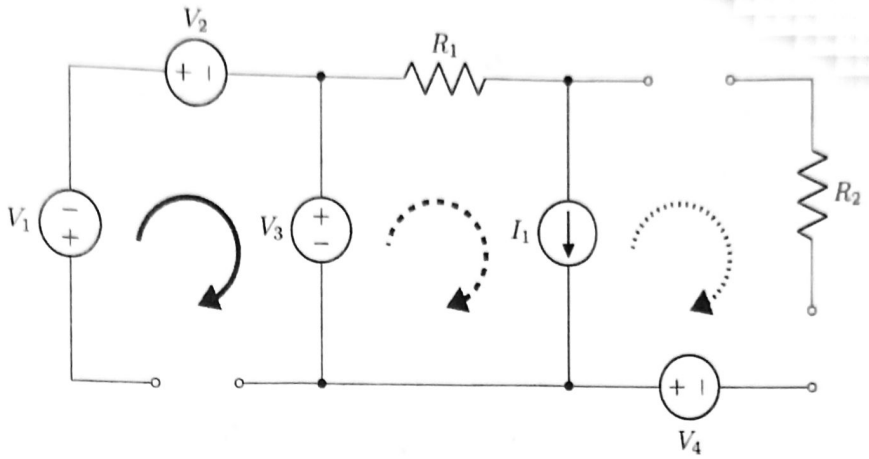

(a) Which of the pathways in the circuit shown above is/are loop(s)?

☐ path made up of V_1, V_2, V_3, and an open circuit, indicated by the **solid** arrow.

☑ path made up of V_3, R_1, and I_1, indicated by the **dashed** arrow.

☐ path made up of V_4, I_1, R_2 and two open circuits, indicated by the **dotted** arrow.

(b) Based on your choices in (a), how would you define a loop?

A loop has to be a closed path that goes through various ~~varies~~ circuit elements. The 1st and 3rd pathway mentioned above have open circuits involved in ~~than loop~~ and they cannot be called loops for that reason. The Second path has a closed path, so it is a loop

3. How many loops can you make for the following circuit? How many of them are 'Dependent' and how many are 'Independent'? [*Hint: identify the nodes and redraw a simplified version of the circuit.*]

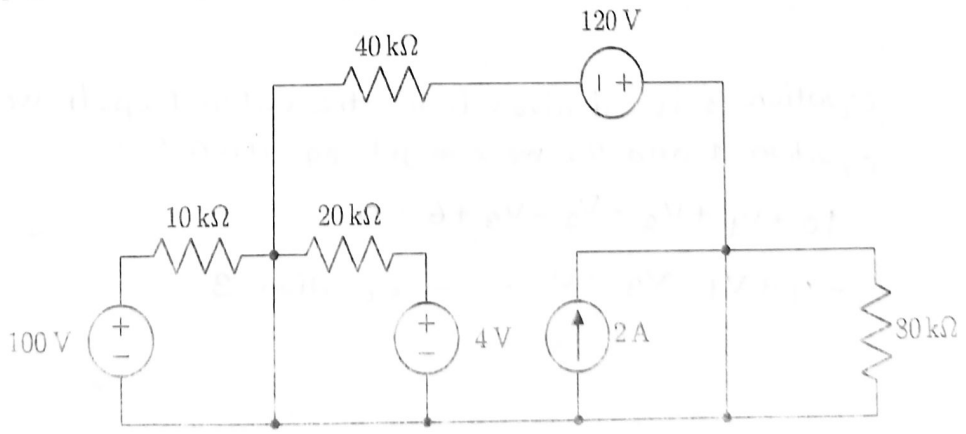

Number of independent loops = 3

Number of dependent loops = 3

4. For the following circuit,

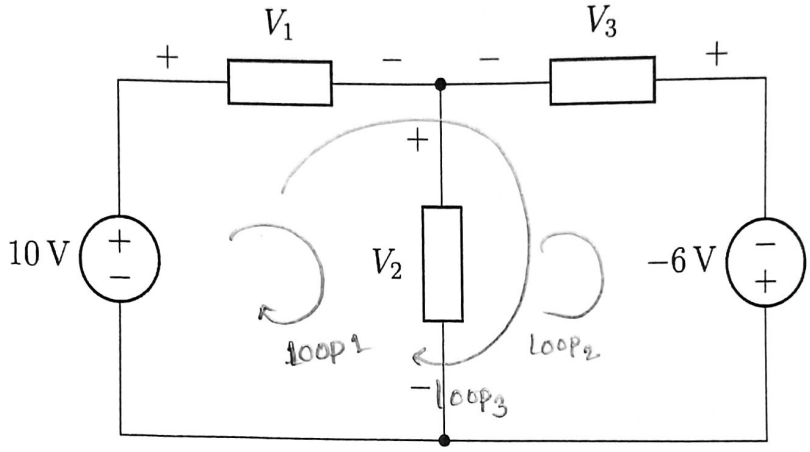

(a) How many loops may KVL be applied along? Mark the loops in the circuit diagram.

3

(b) List all of the equations obtained by applying KVL along the number of loops mentioned in (a).

1) $-10 + V_1 + V_2 = 0$

2) $-V_2 - V_3 - (-6) = 0$

$\Rightarrow -V_2 - V_3 + 6 = 0$

3) $-10 + V_1 - V_3 - (-6) = 0$

$\Rightarrow -4 + V_1 - V_3 = 0$

(c) Can you observe any relationship among the equations? Is it possible to deduce any equation from the others? If so, show the deduction.

equation 3 is derived from the outer loop. If we combine equation 1 and 2, we can get equation 3.

$-10 + V_1 + V_2 - V_2 - V_3 + 6 = 0$

$-4 + V_1 - V_3 = 0$ —— equation 3

(d) Now, have you been able to solve the simultaneous equations to get V_1, V_2, and V_3?

☐ Yes ☑ No

If yes, what are they? If not, why are the equations not solvable and what is your conclusion?

Solving the equations, we get infinite solutions. This occurs when simultaneous equations produce same exact equation. Because they represent the same equation, they represent the same line, which means any value for the variable makes the equation true.

Part 2: KCL

Theory

KCL stands for Kirchhoff's Current Law, which is another fundamental principle used in electrical engineering and physics. It states that the total current entering a node in a circuit must equal the total current leaving the node. In other words, **KCL states that the algebraic sum of currents entering and exiting a node is equal to zero.** This law is also essential for analyzing circuits and predicting the behavior of electrical systems.

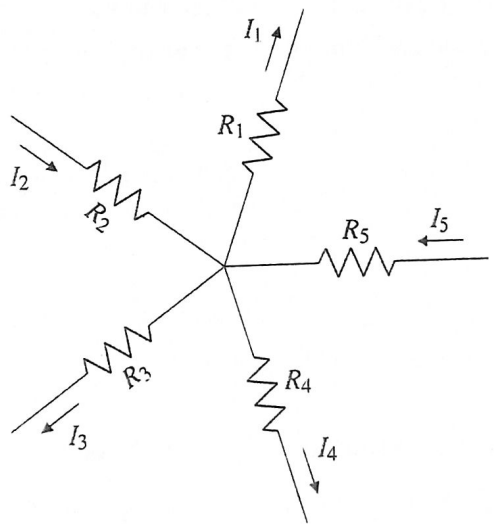

Figure 2: Illustration of KCL

To illustrate KCL, consider Fig. 2. Here, we can see 5 branches connected to 1 node. The exiting currents are I_1, I_3, I_4 and the entering currents are I_2, I_5. Applying KCL gives,

$$\sum I = I_1 + (-I_2) + I_3 + I_4 + (-I_5) = 0$$

$$\Rightarrow I_1 + I_3 + I_4 = I_2 + I_5$$

Which can be interpreted as,

Sum of currents entering a node = Sum of currents leaving the node

Procedures

- Measure the resistances of the provided resistors and fill up the data table.
- Construct the following circuit on a breadboard. Try to use minimum number of jumper wires:

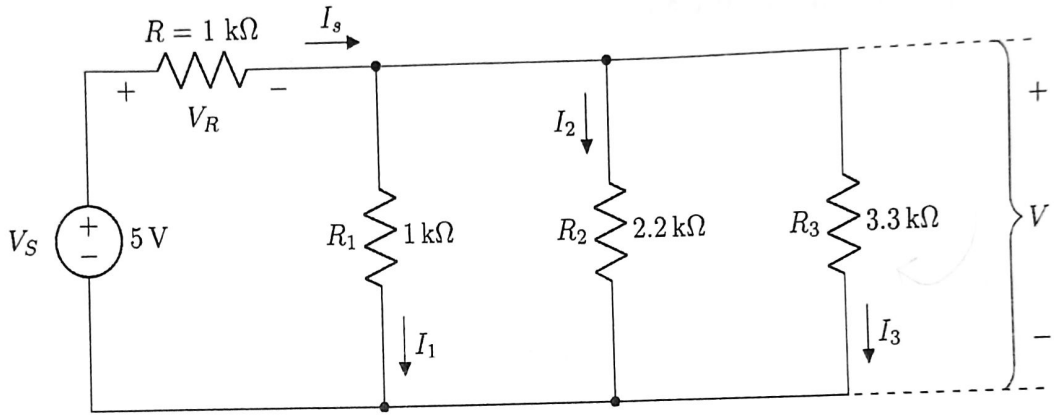

Circuit 2

- Measure the voltage and current across each resistor (V_R, V, I_s, I_1, I_2, & I_3) as shown in the figure above. Use a Multimeter to measure the voltage, and use Ohm's law to calculate the current through each resistor. Fill up the data tables.

- Verify KCL as $\sum i = 0$ for the node connecting R to R_1, R_2, & R_3 (Assume positive exiting currents).

  For this node, $\sum i = -I_s + I_1 + I_2 + I_3$

- Calculate the theoretical values of I, I_1, I_2, I_3 and note them down in the 'Theoretical Observation' row in Table 5. For I_1, I_2, & I_3 use the *Current Divider Rule*. Relevant formulas are given below for your convenience:

$$I = \frac{V_s}{R+R_p} \qquad I_1 = \frac{(R_1)^{-1}}{(R_p)^{-1}} \times I_s \qquad I_2 = \frac{(R_2)^{-1}}{(R_p)^{-1}} \times I_s$$

$$I_3 = \frac{(R_3)^{-1}}{(R_p)^{-1}} \times I_s \qquad \text{where } R_p = \left((R_1)^{-1} + (R_2)^{-1} + (R_3)^{-1}\right)^{-1}$$

Data Tables

Signature of Lab Faculty: [signature] **Date:** 12-10-23

** ***For all the data tables, take data up to three decimal places, round to two, then enter into the table.***

Table 4: Resistance Data

For all your future calculations, please use the observed values only **(even for theoretical calculations)**.

Notation	Expected Resistance	Observed Resistance (kΩ)
R	1 kΩ	0.981
R_1	1 kΩ	0.981
R_2	2.2 kΩ	2.14
R_3	3.3 kΩ	3.2

Table 5: Data from Circuit 2

In the following table, I_1 is the current through resistor R_1. Similar syntax applies to remaining resistors. The voltage supplied to the complete circuit is denoted by V_s and the current being supplied to the whole network is denoted as I_s.

Observations	V_s (V) (from dc power supply)	V_s (V) (using multimeter)	V_R (V)	$I_s = \frac{V_R}{R}$ (mA)	V (V)	$I_1 = \frac{V}{R_1}$ (mA)	$I_2 = \frac{V}{R_2}$ (mA)	$I_3 = \frac{V}{R_3}$ (mA)	$\sum i = -I_s + I_1 + I_2 + I_3$ (mA)
Experimental	5	4.98	3.173	3.23	1.8	1.83	0.84	0.56	0
Theoretical			3.19	3.19	1.8	1.815	1.825	0.55	0

Here, Absolute error in $\sum i$ calculation = 0

Questions

5. Kirchoff's current law (KCL) states that *the algebraic sum of branch currents flowing into and out of a node is equal to zero*. This is a consequence of another principle.

Which principle is it?

☐ Conservation of Energy ☑ Conservation of Electric Charge ☐ None of them

Why is your selection valid?

It is valid because the principle of conservation of electric charge states that the total amount of charge in a closed system has to be constant. And again according to KCL, $\Sigma i_{incoming} = \Sigma i_{outgoing}$.

6. Using KCL, determine the current I for the following circuit.

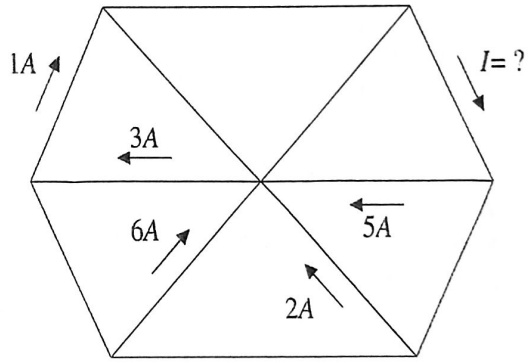

Using KCL,

$6+5+2+3 = 10\ A$

$I = 10 + 1\ A$

$= 11\ A$.

$\therefore$ (Answer = 11 A)

7. For the following circuit, determine the current I using only KCL and Ohm's Law.

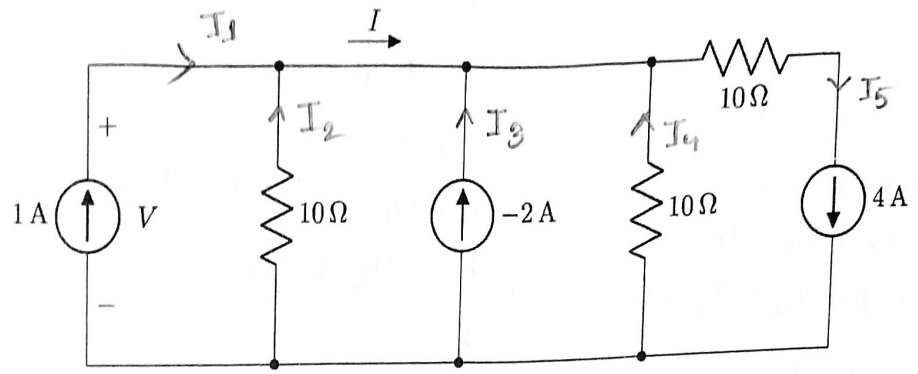

$I_1 + I_2 + I_3 + I_4 = I_5$

$I_1 + I_2 + I_3 + I_4 - I_5 = 0$

$1 + I_2 - 2A + I_4 - 4A = 0$

$I_2 + I_4 - 5A = 0.$

$\Rightarrow \frac{V_{R_1}}{10} + \frac{V_{R_2}}{10} = 5$

$\Rightarrow \frac{2V_R}{10} = 5 \quad [V_{R_1} = V_{R_2} = V_R]$

$\Rightarrow V_R = 25\ V$

$I_2 + I_4 = 5$

$I_1 + I_2 = I$

$1 + \frac{V_R}{R} = I$

$\therefore I = 1 + \frac{25}{10}$

$= 3.5\ A.$

8.

(a) "KCL must always be applied at a node". The statement is-

☑ True ☐ False

(b) Using KCL only, determine the value of I_3 if $I_1 = 2\ A$ and $I_2 = 3\ A$ in the circuit shown below.

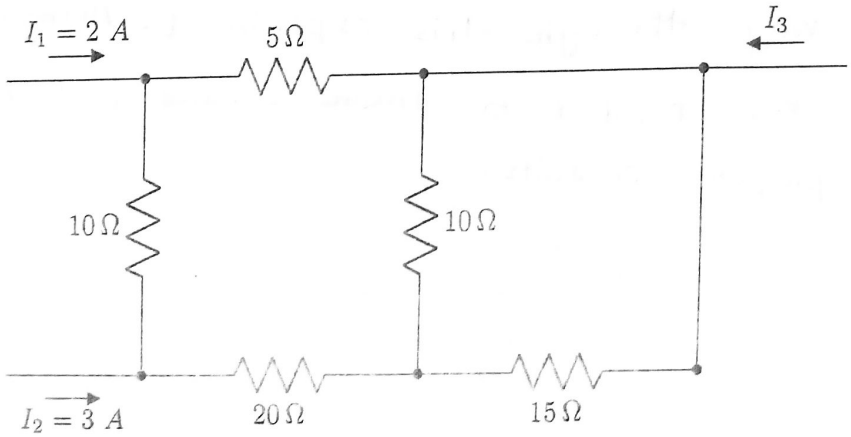

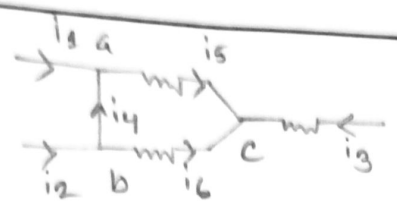

At node a,

$I_1 + I_4 = I_5$

$\Rightarrow 2 + I_4 = I_5$ — (i)

At node b,

$I_2 = I_4 + I_6$

$3 = I_4 + I_6$ — (ii)

at node c,

$I_5 + I_6 + I_3 = 0$ — (iii).

(i)+(ii)

$5 + \cancel{I_4} = \cancel{I_4} + I_5 + I_6$

$5 = I_5 + I_6$

$5 = -I_3$

$\therefore I_3 = -5\,A$. (Ans:—)

Report

1. Fill up the theoretical parts of all the data tables.
2. Answer to the questions.
3. Discussion *[your overall experience, accuracy of the measured data, difficulties experienced and your thoughts on those]*. Start write from below the line.

The measured data was very close to the data we found from theoritical calculations. So we can say that data are mostly accurate. The slight differences occured as theoritically we consider an ideal space where there is no other resistance or air. The experiments were slightly difficult but then again we learned to verify both KVL and KCL in the correct way through this experiment. Alongside, proper attention was needed to ensure accurate connection and making proper circuits.