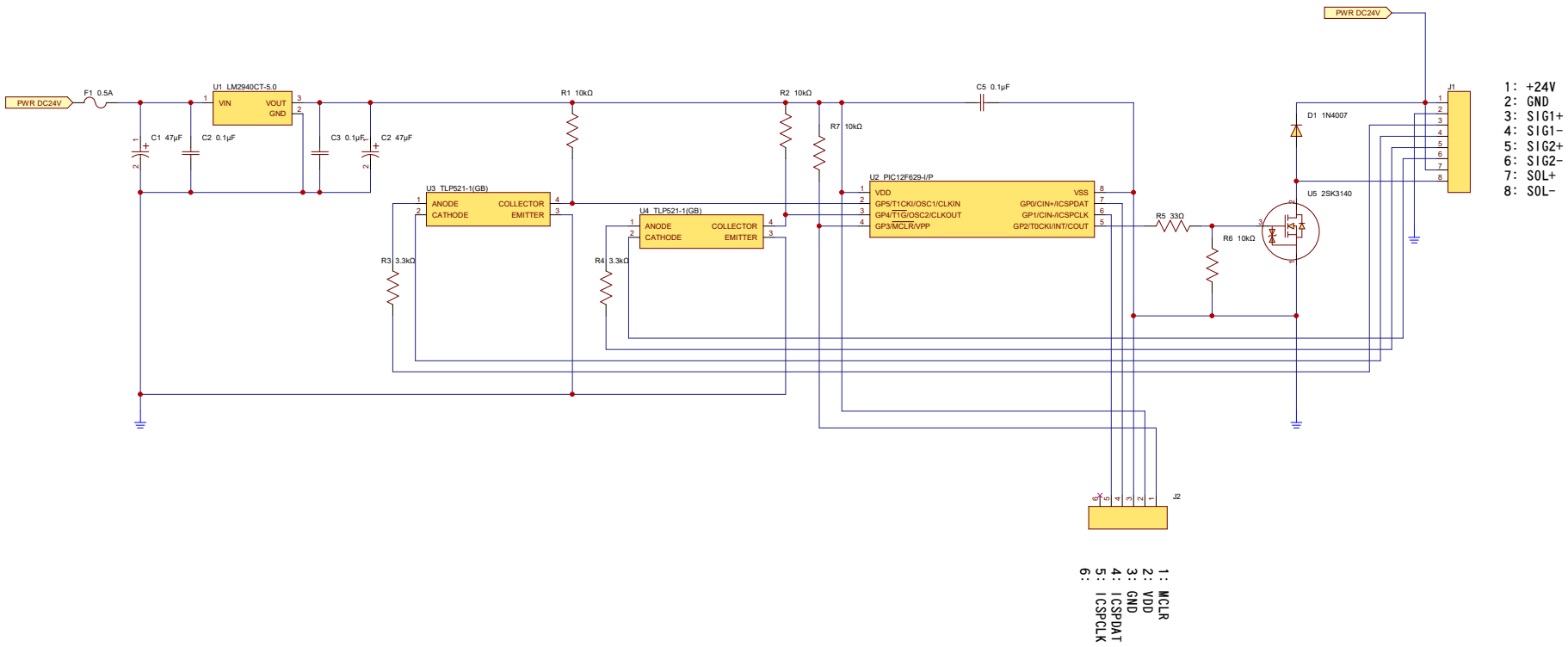

DESIGN	D.W.G	CHECK	APPROVAL
名前			
Title.	電子回路図サンプル		
No.	Dsd200825		
DESIGN			A4 1/1

Designed by Quadcept