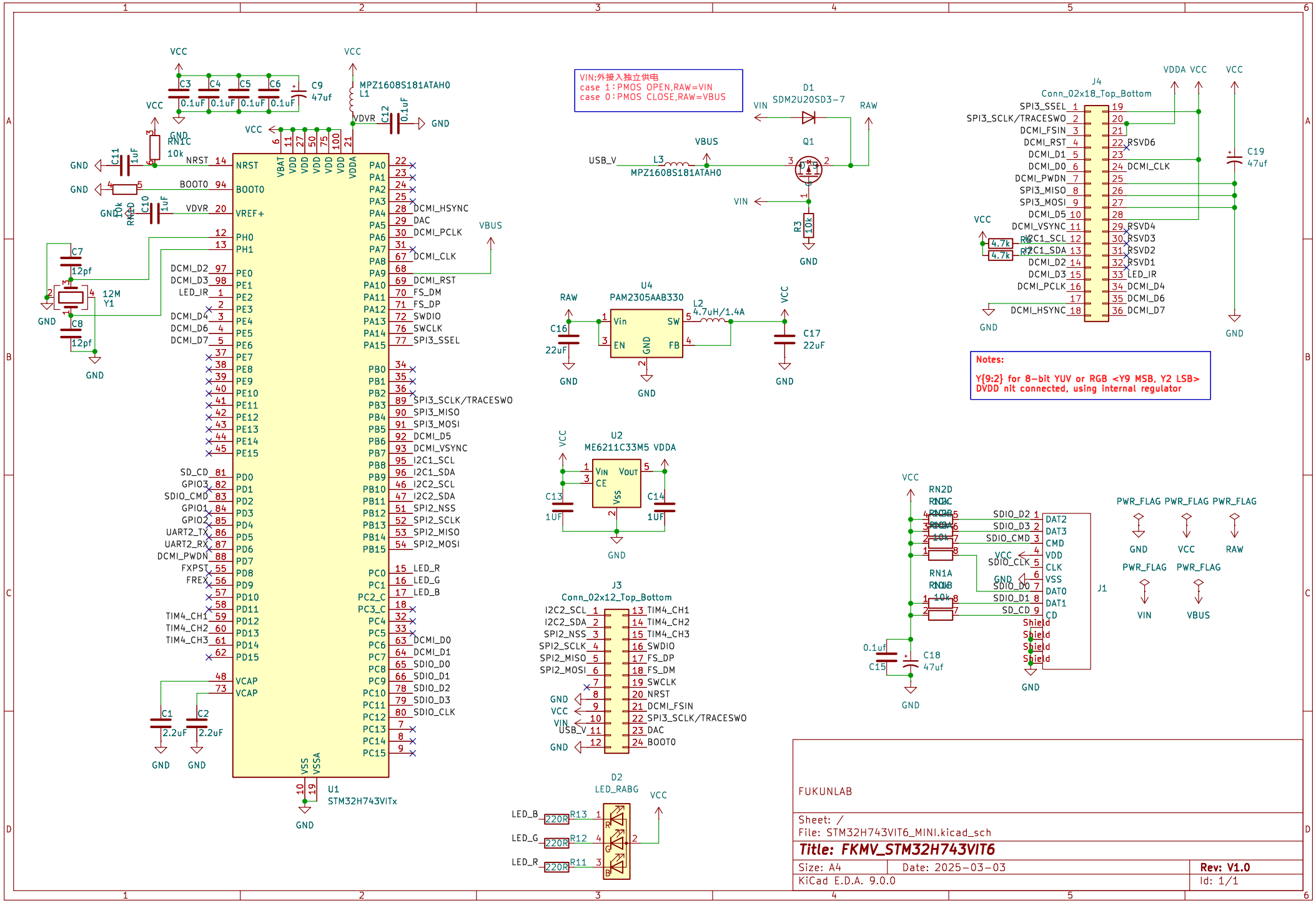
VIN:外接入独立供电
case 1:PMOS OPEN,RAW=VIN
case 0:PMOS CLOSE,RAW=VBUS
Notes:
Y[9:2] for 8-bit YUV or RGB <Y9 MSB, Y2 LSB>
DVDD nit connected, using internal regulator
U1
STM32H743VITx
U2
ME6211C33M5
U4
PAM2305AAB330
J1
J3
Conn_02x12_Top_Bottom
J4
Conn_02x18_Top_Bottom
D1
SDM2U20SD3-7
Q1
D2
LED_RABG
Y1
12M
MPZ1608S181ATAH0
FUKUNLAB
Sheet: /
File: STM32H743VIT6_MINI.kicad_sch
Title: FKMV_STM32H743VIT6
Size: A4
Date: 2025-03-03
Rev: V1.0
KiCad E.D.A. 9.0.0
Id: 1/1