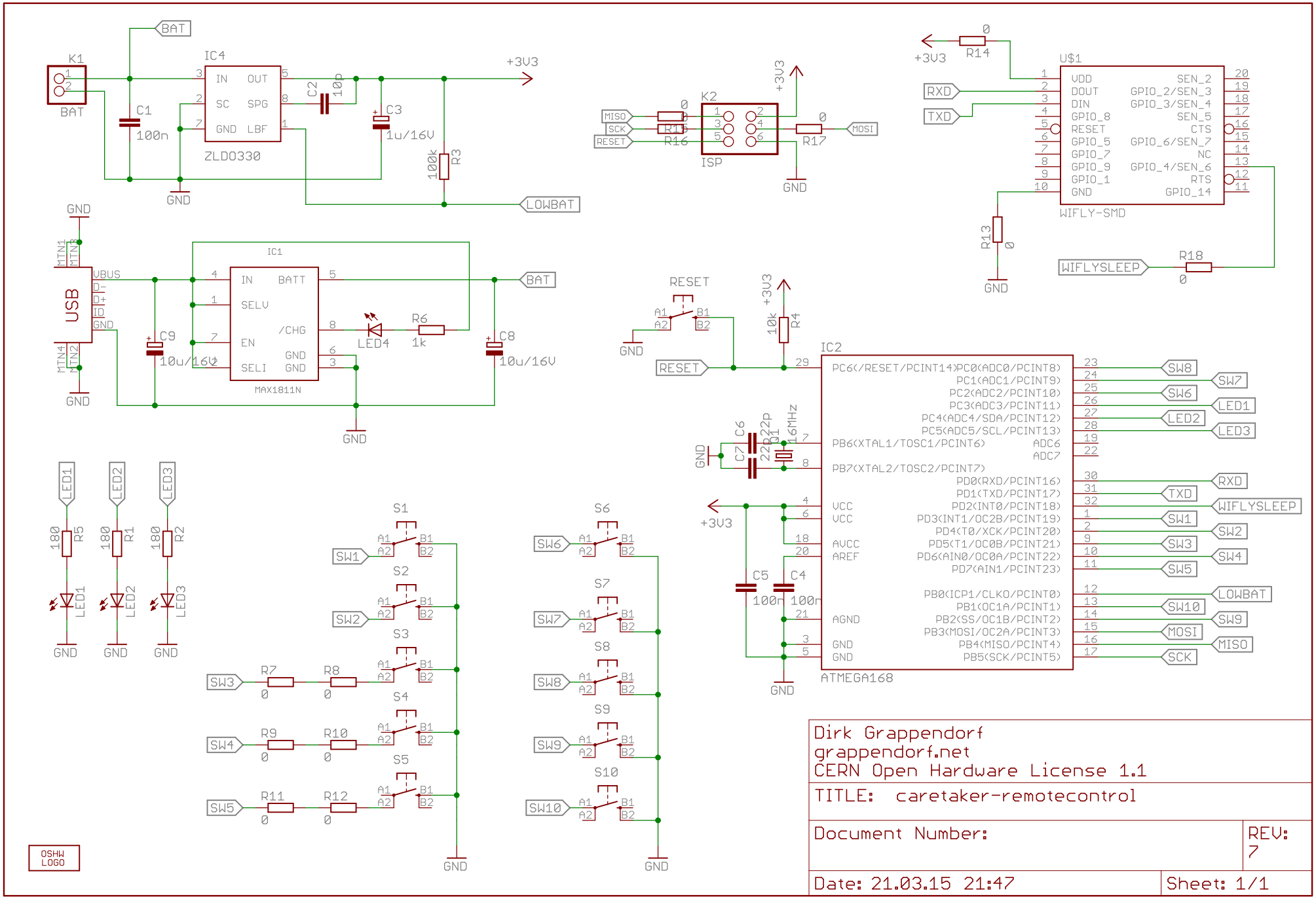

Dirk Grappendorf
grappendorf.net
CERN Open Hardware License 1.1

TITLE: caretaker-remotecontrol

Document Number:

REV: 7

Date: 21.03.15 21:47

Sheet: 1/1