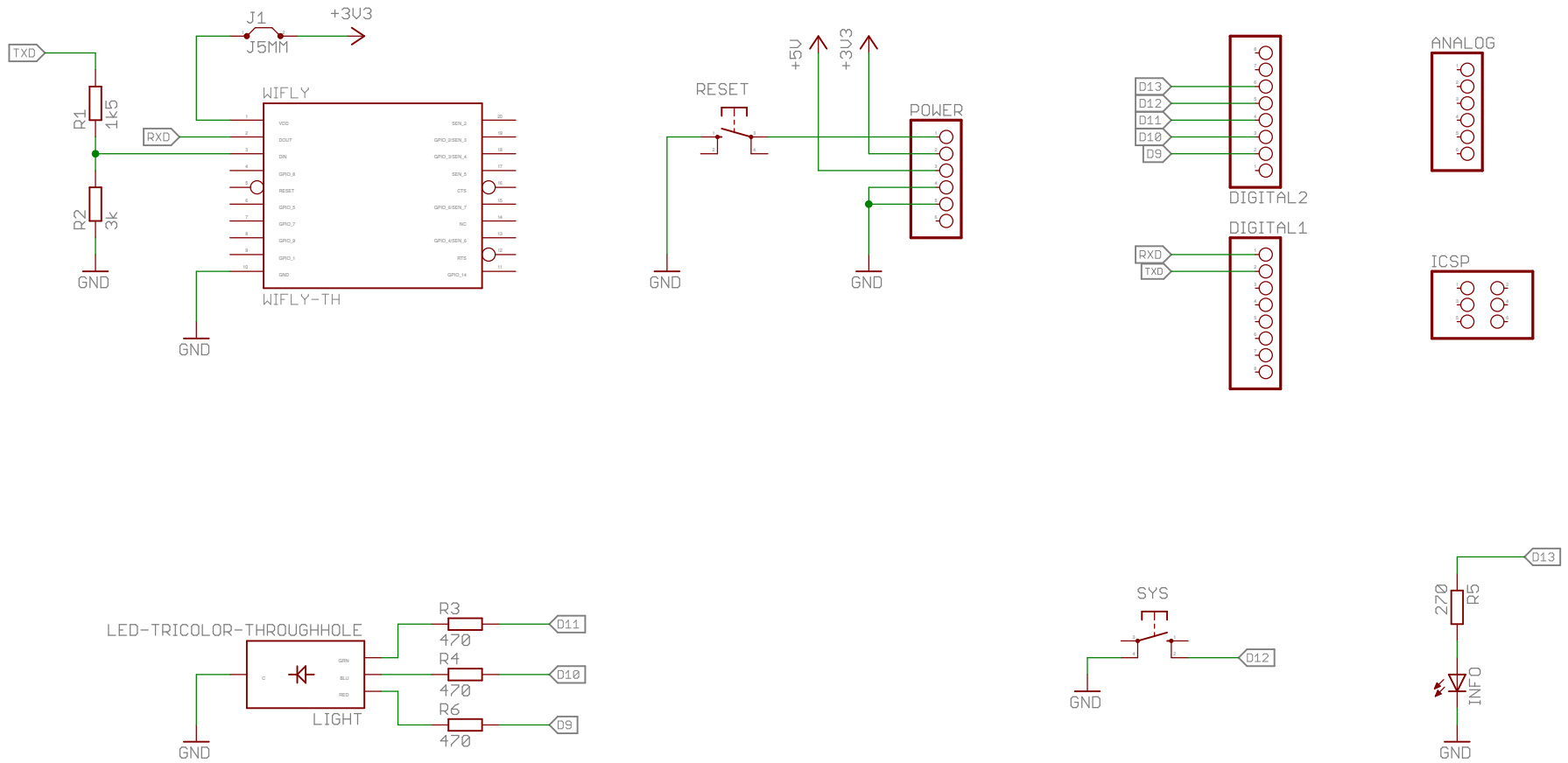

Dirk Grappendorf
grappendorf.net
CERN Open Hardware License 1.1

TITLE: rgb

Document Number:

REV: 1

Date: 26.03.15 19:38

Sheet: 1/1