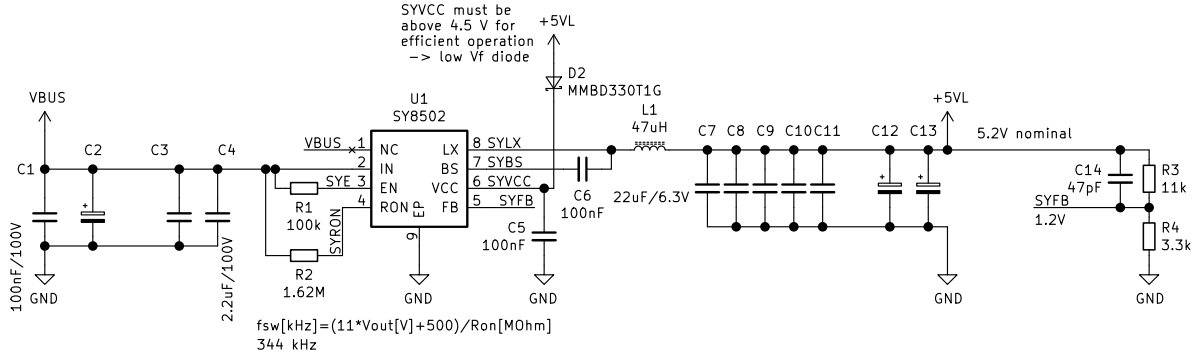

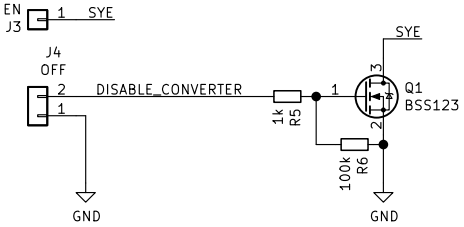

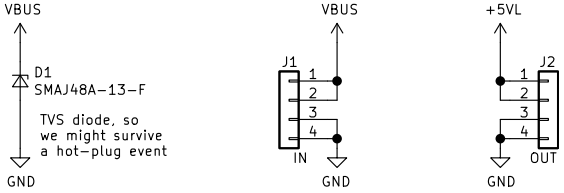

automated.ee

H1
M3

Transsistor Logo

Fully Automated OÜ

Sheet: /
File: tinypol.sch

Title: 48V-to-5V 1-A Tiny PoL

Size: A4	Date: 2019-11-25	**Rev:**
KiCad E.D.A. kicad 5.1.5		Id: 1/1