Page	Title of schematic page	Rev.	Date
01	Page List	1A	
02	Block Diagram	1A	
03	Change List	1A	
04	SNB 1/4(HOST&PCIE)	1A	
05	SNB 2/4(DDR3 I/F)	1A	
06	SNB 3/4(POWER)	1A	
07	SNB 4/4(GND/Strap)	1A	
08	PCH 1/6(DMI/FDI/VIDEO)	1A	
09	PCH 2/6(SATA/RTC/HDA/LPC)	1A	
10	PCH 3/6(PCIE/USB/CLK/NV)	1A	
11	PCH 4/6(GPIO/CPU/STRAP)	1A	
12	PCH 5/6(POWER)	1A	
13	PCH 6/6 (GND)	1A	
14	DDR3 DIMM-0-STD	1A	
15	DDR3 DIMM-1-STD	1A	
16	WPCE791L & FLASH	1A	
17	CRT/LVDS/CAMERA	1A	
18	CARD READER(RTS5209)	1A	
19	HDMI Conn/BT/THERMAL	1A	
20	USB/TP/FAN	1A	
21	LAN (RTL8111E)	1A	
22	WLAN/HOLE	1A	
23	HDD/ODD/EMI	1A	
24	Audio CX20671	1A	
25	LED/RF/KB/PS	1A	
26	POWER +VCC_CORE (ISL95831)	1A	
27	POWER 3VPCU&5VPCU(PM6686)	1A	
28	POWER 1.5VSUS/VTT_MEM	1A	
29	POWER +1.05V(UP6128A)-15A	1A	
30	POWER +0.85V(APE8858)-6A	1A	
31	POWER VGA_CORE(OZ8111)--15A	1A	
32	POWER VCC1.8/Thermal	1A	
33	POWER(ADAPTER IN / CONN)	1A	
34	POWER CHARGER (ISL88731C)	1A	
35	NVIDIA GS2-64 PCIE&PW 1/4	1A	
36	NVIDIA GS2-64 TMDS&DAC 2/4	1A	
37	NVIDIA GS2-64 VRAM 3/4	1A	
38	NVIDIA GS2-64 VRAM 4/4	1A	
39	IO PORT LIST	1A	

* : No mount
E@ : For DIS GFX only
I@ : For INT GFX only

HK1 BLOCK DIAGRAM

DDR III — Dual Channel
P14~P15 — 1066/1333 MHz

intel
SandyBridge
PCI-E X16
DDR SYSTEM MEMORY
rPGA 988
(37.5mm X 37.5mm)
FDI
DMI
P4~P7

PCIE — 5GT/s

NVIDIA
N12M-GS2/N12P-GV
Package type : GB1b-64
P35 ~ P38

VRAM
1GB / 512MB
P37 ~ P38

2.7GT/s FDI
DMI X4 5GT/s

intel
<PCH>
FDI
DMI
SATA Gen3
SATA Gen2
iGFX Interfaces
HDA
SPI
P6~P11

CougarPoint 0.7
USB
mBGA 989
(25mm X 25mm)

INT_CRT — P17
INT_LVDS — P17
INT_HDMI — P19

Bluetooth P19 — PORT5
Camera P17 — PORT4
WiMax P22 — PORT9
USB I/O P20 — PORT0
USB I/O P20 — PORT1
USB I/O P20 — PORT2
USB I/O P20 — PORT3

USB 2.0

P21 HDD SATA0
P21 ODD SATA3

5GT/s — PCI-Express Gen2
PCIE6
PCIE1
PCIE4

Giga-LAN
RTL8111E
P21

RJ45

P21

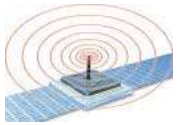

WLAN/Widi/BT P22
BT Combo : Atheros WB195
WiMAX : Kelsey Peak KSP(612BNXHWG)
802.11bgn/Intel/KsP_1x2_BD

Card Reader
RTS5209
P18

MS
SD-XC

Audio CODEC
CX20671
P24

Azalia

HP Jack — P24
MIC Jack — P24
SPK — P24
DMIC — P24

SPI ROM
4MB
P9

SPI ROM
2MB

LPC

EC
NPCE791L/NPCE795L
P16

Wireless Switch — P25

Touch Pad — P20

Keyboard — P25

Power LED
Sleep LED
SATA LED
Battery LED
RF LED
SCROLED
CAPSLED
NUMLED
CARD LED

Button
QWA#
VAIO#
ASSIST#
Power SW

Note:
HM65 does not support USB 6 & 7
HM65 does not support SATA 2 & 3

Change List from PVT to MP

HK1_MB_SCH_PVT_001

P19-- R345 change to 48.7K.

Reason : Change thermal sensor temperature to 55 degree.
Possible Risk: No.

P19-- R208 change to 27.4K for UMA.

Reason : Change thermal sensor temperature to 82 degree.
Possible Risk: No.

HK1_MB_SCH_PVT_002

P16-- KR27 change value from 10K to 4.7K.
P33-- PD7 change value from uClamp3301D to CDSOD323-T03C.

Reason : for Battery ESD protact.
Possible Risk: No.

Sandy Bridge Processor (DMI,PEG,FDI)

Sandy Bridge Processor (CLK,MISC,JTAG)

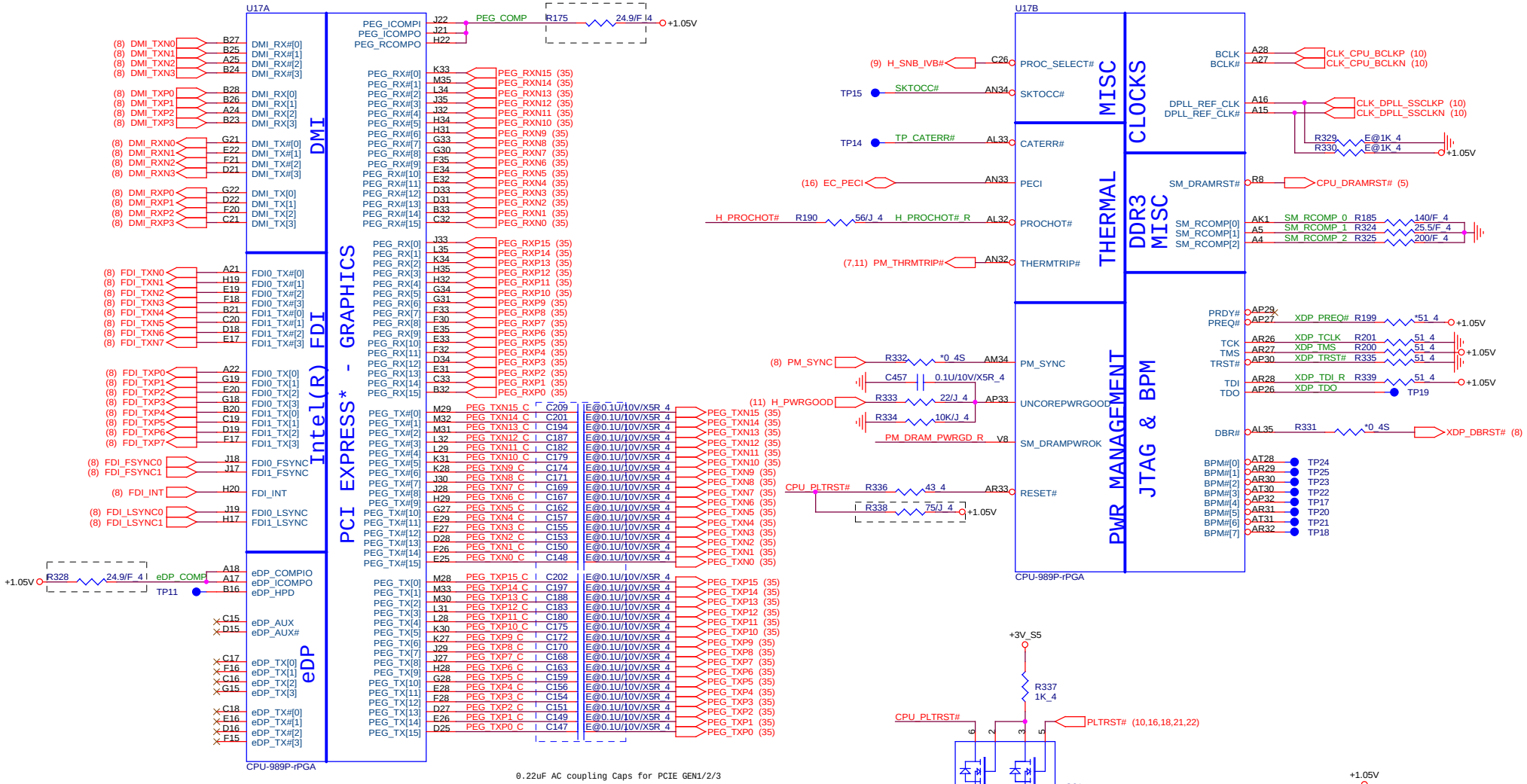

SNB_IVB#:
- It is NC when using Sandy Bridge.(1.05V)
- For next generation processor it will be grounded in package.(1.0V)

FDI Disabling (Discrete Only)

-FDI_FSYNC (J18/J17/J19/H17) can gang all these 4 signals together and tie them with only one 1K resistor to GND (DG V0.5 Ch2.2.9).
- FDI_INT connect to GND with 1K ohm.

1.Level 1 Environment-related Substances Should Never be Used.
2.Recycled Resin and Coated Wire should be procured from Green Partners.

Quanta Computer Inc.
PROJECT :Huron River

Size	Document Number	Rev
	Sandy Bridge 1/4	1A

Date: Sunday, April 03, 2011 Sheet 4 of 39

Sandy Bridge Processor (DDR3)

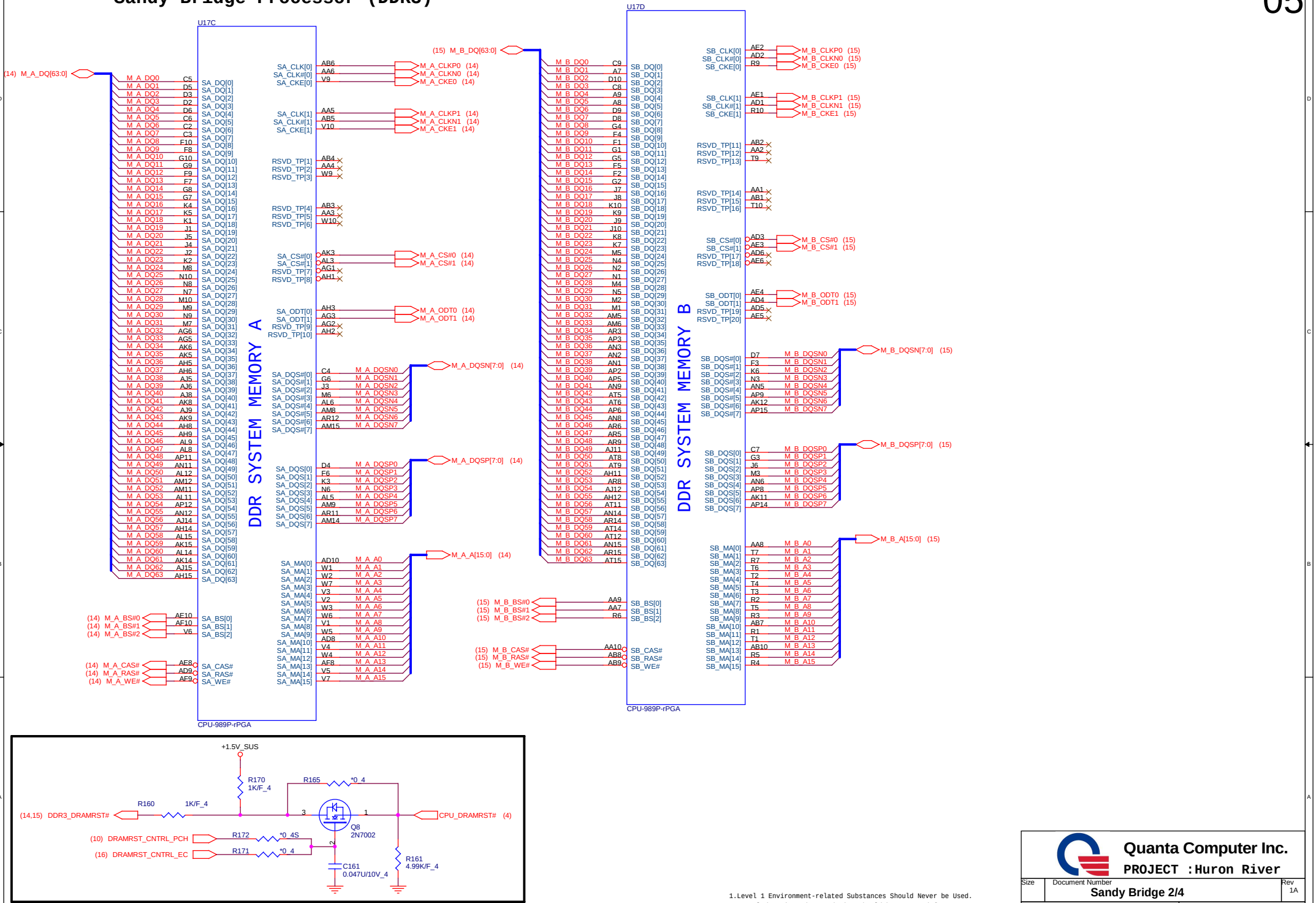

1.Level 1 Environment-related Substances Should Never be Used.
2.Recycled Resin and Coated Wire should be procured from Green Partners.

Quanta Computer Inc.
PROJECT : Huron River

Size	Document Number	Rev
	Sandy Bridge 2/4	1A
Date: Sunday, April 03, 2011	Sheet 5 of 39	

Sandy Bridge Processor (POWER)

06

Sandy Bridge Processor (GRAPHIC POWER)

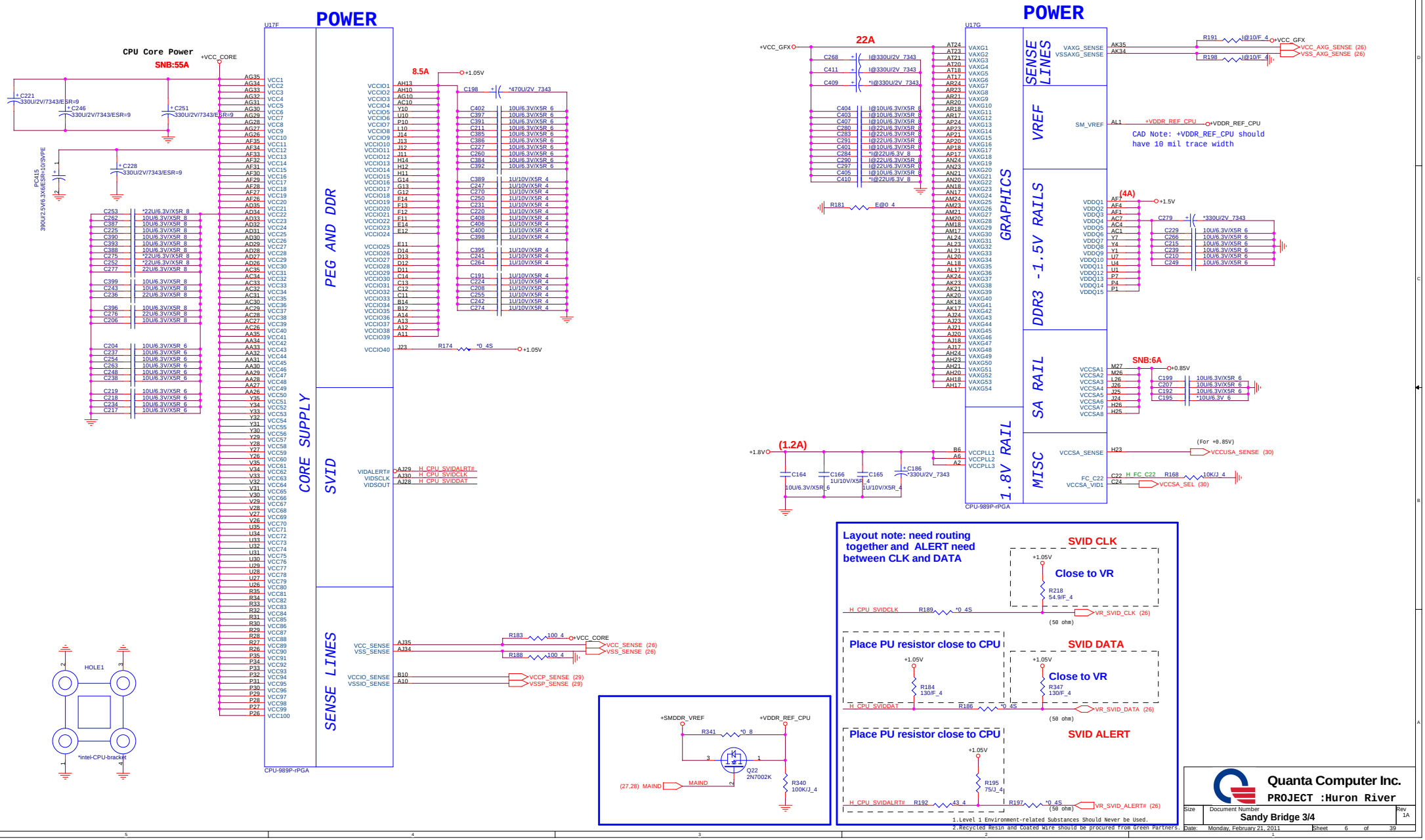

1.Level 1 Environment-related Substances Should Never be Used.
2.Recycled Resin and Coated Wire should be procured from Green Partners.

Quanta Computer Inc.
PROJECT :Huron River

Size	Document Number	Rev
	Sandy Bridge 3/4	1A
Date: Monday, February 21, 2011	Sheet 6 of 39	

Sandy Bridge Processor (GND)

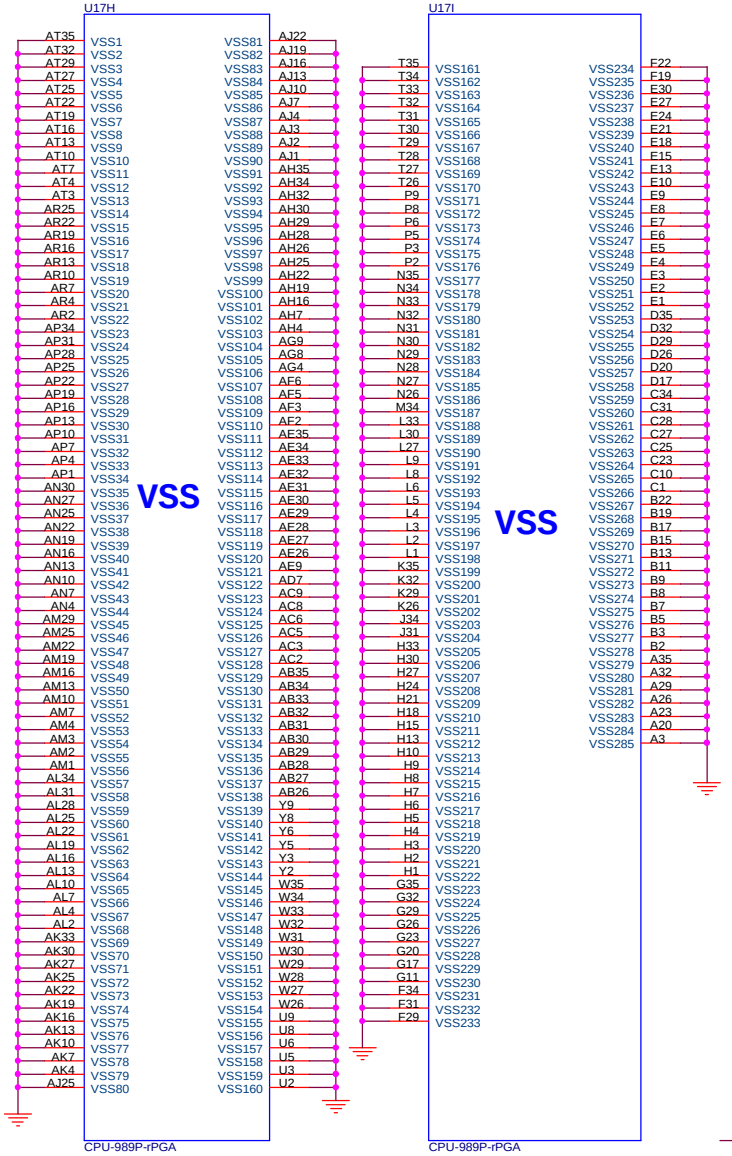

Sandy Bridge Processor (RESERVED, CFG)

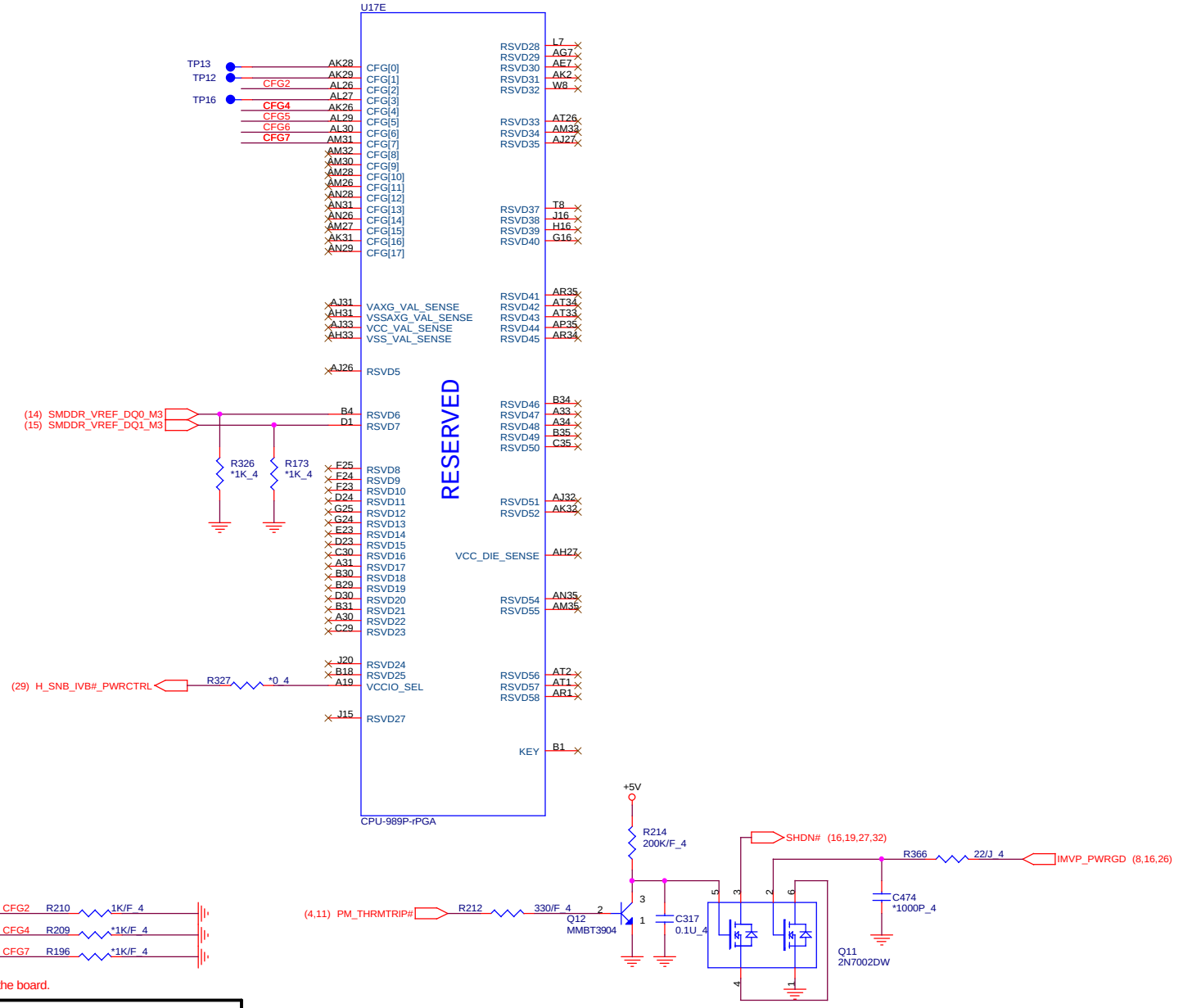

Processor Strapping

The CFG signals have a default value of '1' if not terminated on the board.

	1	0
CFG2 (PEG Static Lane Reversal)	Normal Operation	**Lane Reversed**
CFG4 (DP Presence Strap)	**Disable; No physical DP attached to eDP**	Enable; An ext DP device is connected to eDP
CFG7 (PEG Defer Training)	**PEG train immediately following xxRESETB de assertion**	PEG wait for BIOS training

CFG5 R194 *1K/F_4
CFG6 R193 *1K/F_4

CFG[6:5] (PCIE Port Bifurcation Straps)

11: (Default) x16 - X16 PEG interface
10: PEG x8 x8 bifurcation enableddisabled
01: Reserved - (Device 1 function 1 disabled ; function 2 enabled)
00: x8,x4,x4 - Device 1 functions 1 and 2 enabled

1.Level 1 Environment-related Substances Should Never be Used.
2.Recycled Resin and Coated Wire should be procured from Green Partners.

Quanta Computer Inc.
PROJECT :Huron River

Size	Document Number	Rev
	Sandy Bridge 4/4	1A
Date: Monday, February 21, 2011	Sheet 7 of 39	

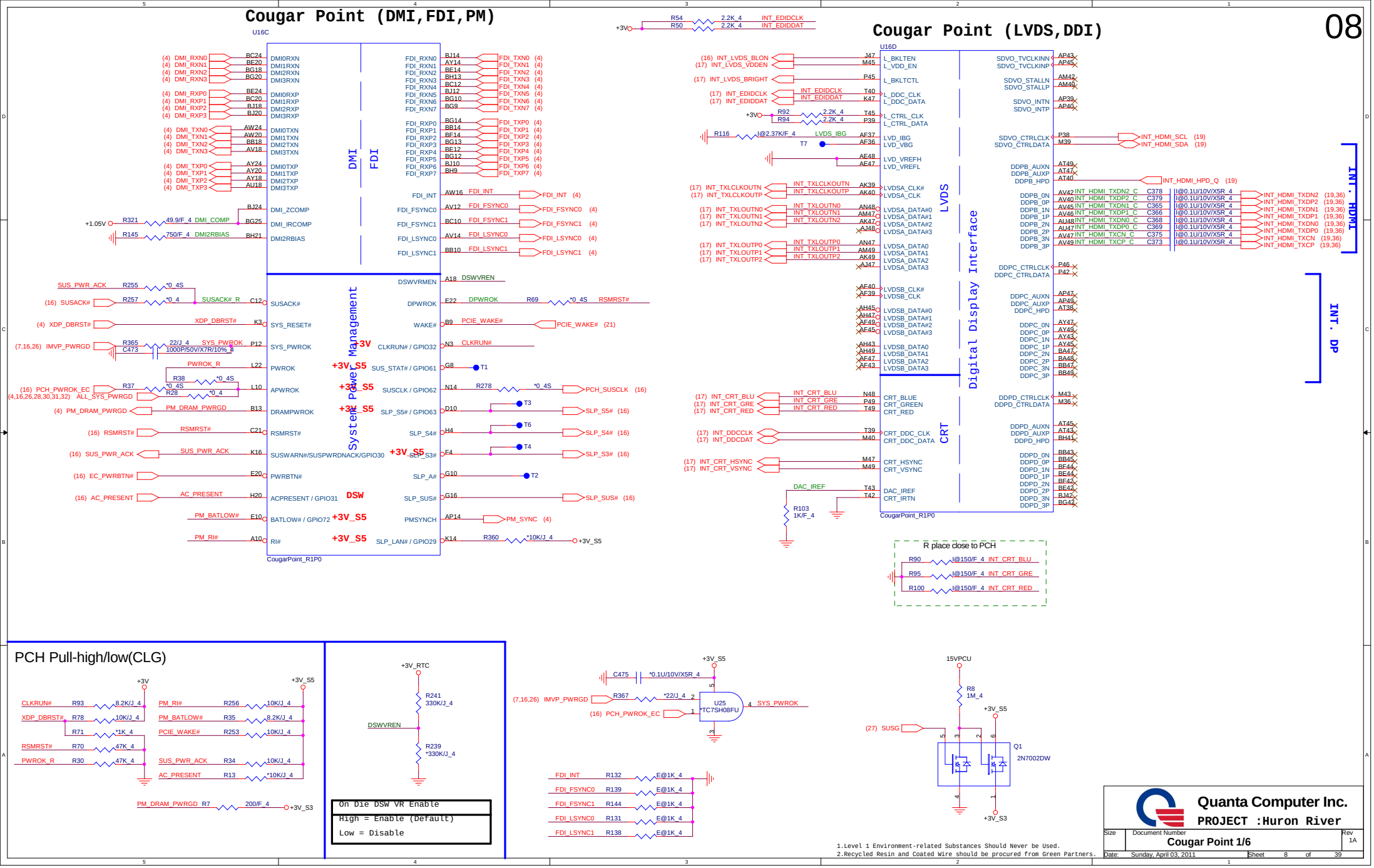

1.Level 1 Environment-related Substances Should Never be Used.
2.Recycled Resin and Coated Wire should be procured from Green Partners.

Quanta Computer Inc.
PROJECT :Huron River

Size	Document Number	Rev
	Cougar Point 1/6	1A

Date: Sunday, April 03, 2011 Sheet 8 of 39

Cougar Point (HDA,JTAG,SATA)

RTC Circuitry(RTC)

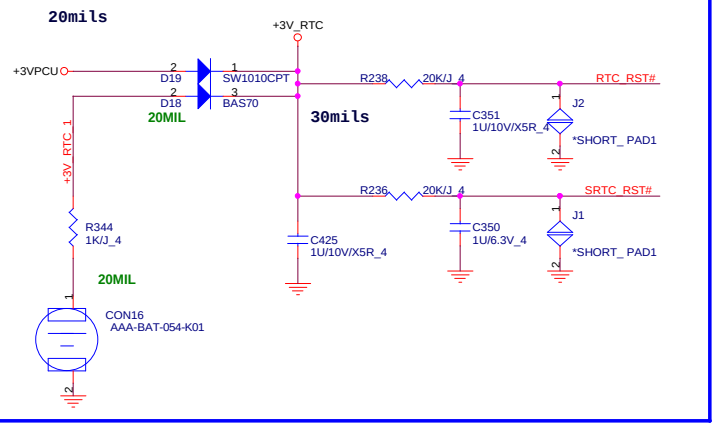

MX25L3205DM2I-12G: AKE39FP0Z00
W25X32VSSIG: AKE39ZP0N00

PCH SPI (CLG)

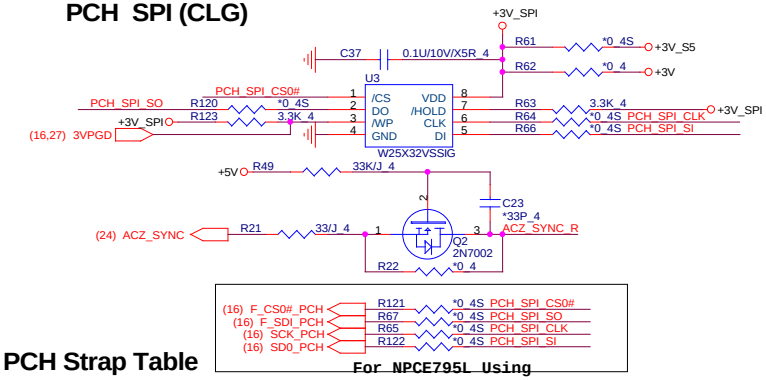

PCH Strap Table

Pin Name	Strap description	Sampled	Configuration	HK1/HK2 note
SPKR	No reboot mode setting	PWROK	0 = Default (weak pull-down 20K) 1 = Setting to No-Reboot mode	+3V R105 *1K_4 SPKR
GNT3# / GPIO55	Top-Block Swap Override	PWROK	0 = "top-block swap" mode 1 = Default (weak pull-up 20K)	R270 *1K_4 PCI_GNT3# (10)
INTVRMEN	Integrated 1.05V VRM enable	ALWAYS	Should be always pull-up	+3V_RTC R242 330K/J_4 PCH_INVRMEN
GNT1# / GPIO51	Boot BIOS Selection 1 [bit-1]	PWROK	GNT1# / GNT0# / Boot Location: 1 / 1 / SPI *; 0 / 0 / LPC	Default weak pull-up on GNT0/1# [Need external pull-down for LPC BIOS]
GPIO19	Boot BIOS Selection 0 [bit-0]	PWROK		R266 *1K_4 BBS_BIT1 (10) R289 *1K_4 BBS_BIT0
HDA_SDO	Flash Descriptor Security	PWROK	0 = Default (weak pull-down 20K) 1 = Enabled	+3V R250 *1K_4 ACZ_SDOUT_R
DF_TVS	DMI/FDI Termination voltage	PWROK	0 = Set to Vss 1 = Set to Vcc (weak pull-down 20K)	R140 2.2K_4 +1.8V R320 1K_4 NV_CLE (11) H_SNB_IVB# (4)
GPIO28	On-die PLL Voltage Regulator	RSMRST#	0 = Disable 1 = Enable (Default)	R91 *1K_4 PLL_ODVR_EN (11)
HDA_SYNC	On-Die PLL VR Voltage Select	RSMRST	0 = Support by 1.8V (weak pull-down) 1 = Support by 1.5V	+3V_S5 R29 1K_4 ACZ_SYNC_R

PCH JTAG Debug (CLG)

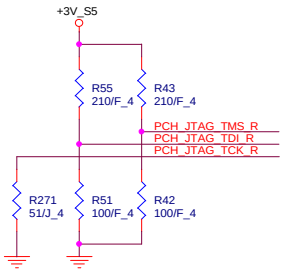

1.Level 1 Environment-related Substances Should Never be Used.
2.Recycled Resin and Coated Wire should be procured from Green Partners.

Quanta Computer Inc.
PROJECT :Huron River

Size	Document Number	Rev
	Cougar Point 2/6	1A
Date: Sunday, April 03, 2011	Sheet 9 of 39	

Cougar Point-M (PCI,USB,NVRAM)

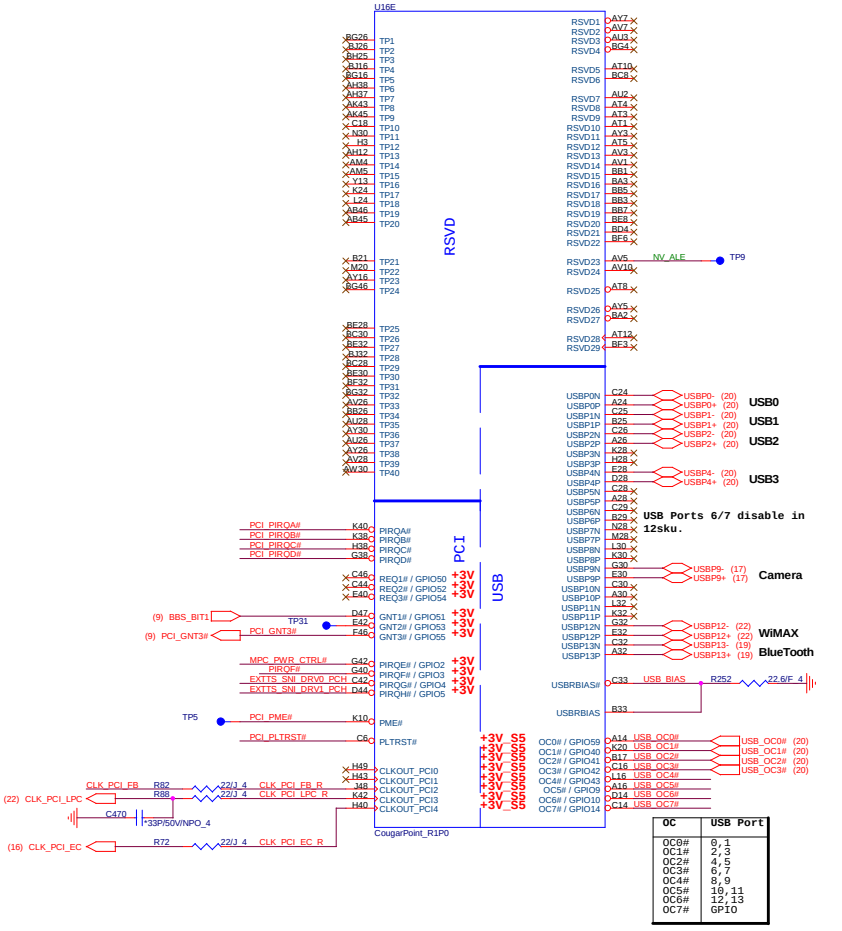

OC	USB Port
OC0#	0,1
OC1#	2,3
OC2#	4,5
OC3#	6,7
OC4#	8,9
OC5#	10,11
OC6#	12,13
OC7#	GPIO

Cougar Point-M (PCI-E,SMBUS,CLK)

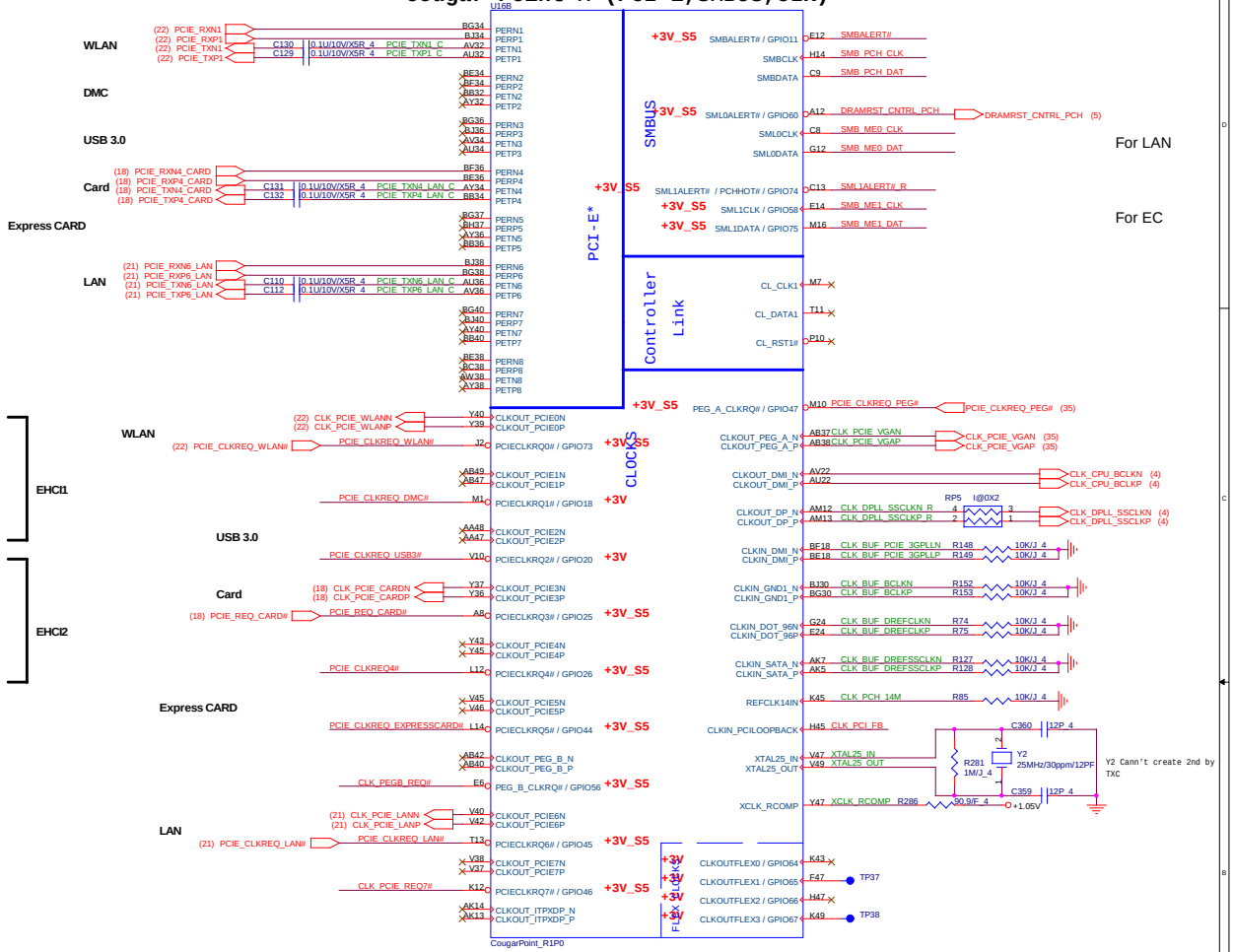

PLTRST#(CLG)

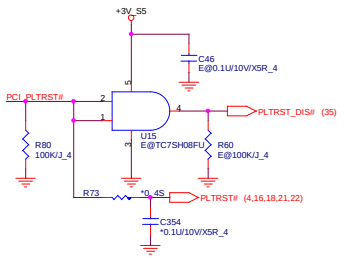

PCI/USBOC# Pull-up(CLG)

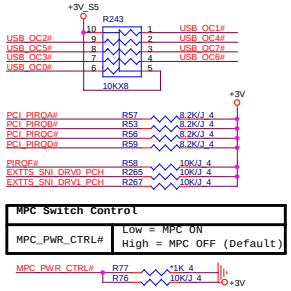

MPC Switch Control	
MPC_PWR_CTRL#	Low = MPC ON High = MPC OFF (Default)

CLK_REQ/Strap Pin(CLG)

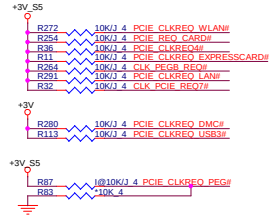

SMBus/Pull-up(CLG)

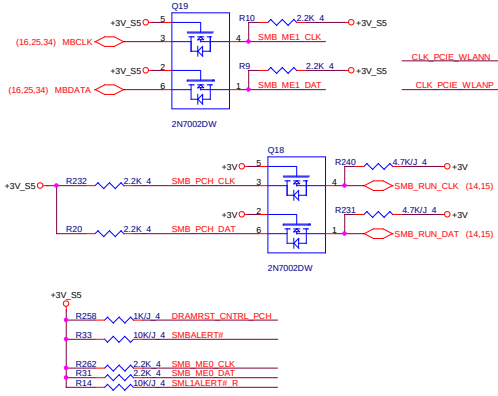

1.Level 1 Environment-related Substances Should Never be Used.
2.Recycled Resin and Coated Wire should be procured from Green Partners.

Quanta Computer Inc.
PROJECT :Huron River

Size	Document Number	Rev
	Cougar Point 3/6	1A
Date: Tuesday, April 05, 2011	Sheet 10 of 39	

Cougar Point (GPIO,VSS_NCTF,RSVD)

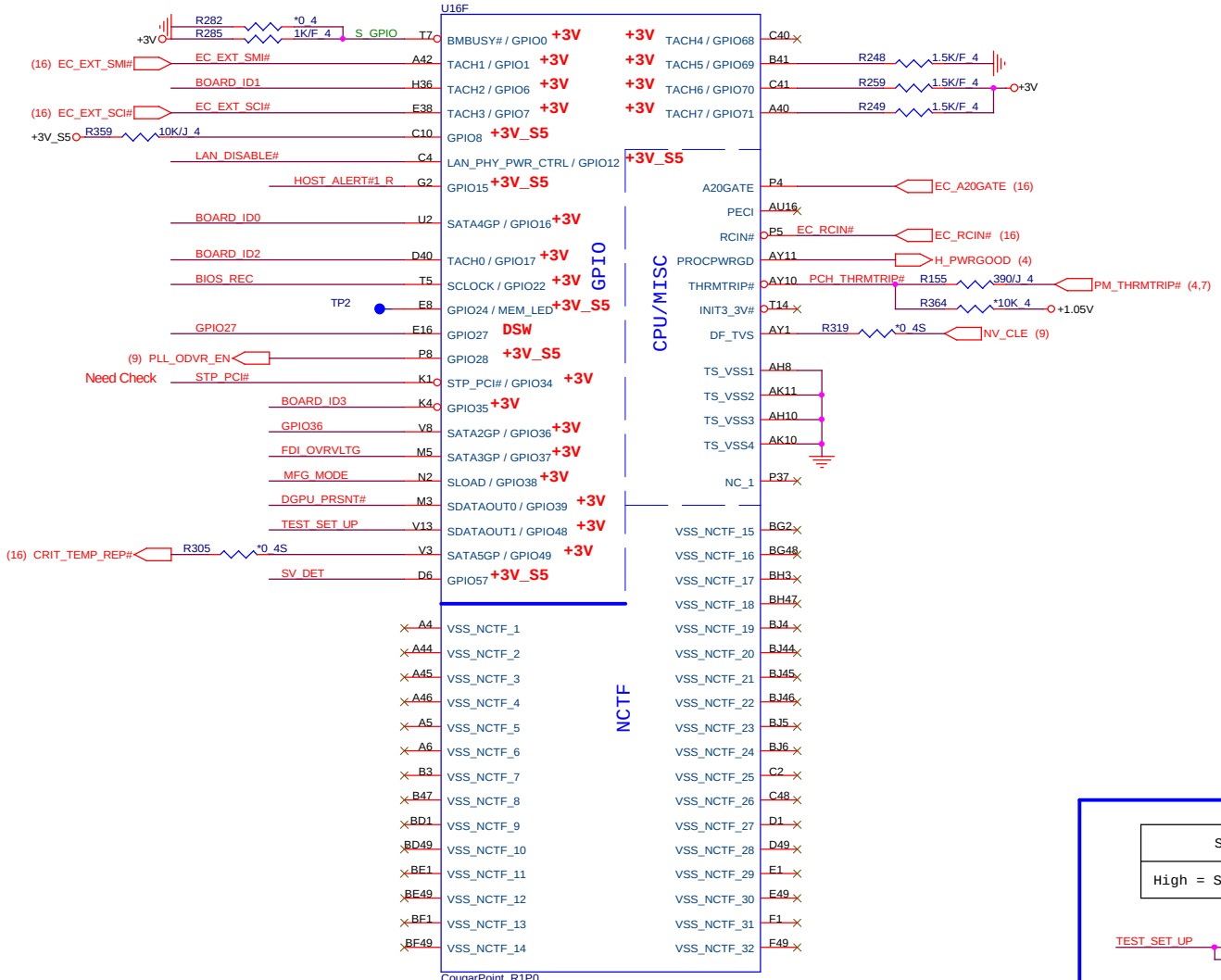

GPIO Pull-up/Pull-down(CLG)

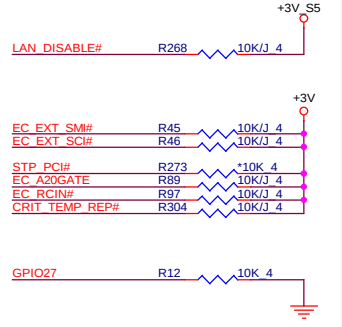

Board ID0 (N12M/N12P)	N12M	N12P
R294	Stuff	No Stuff
R297	No Stuff	Stuff

Board ID1 (VRAM Vendor)	Samaung	Hynix
R47	Stuff	No Stuff
R48	No Stuff	Stuff

Board ID2 (VRAM 1G/512M)	1G	512M
R39	Stuff	No Stuff
R27	No Stuff	Stuff

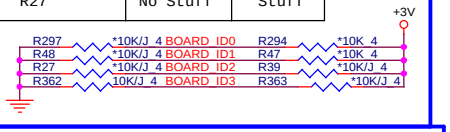

SV_SET_UP
High = Strong (Default)

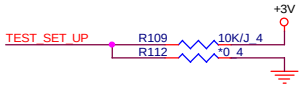

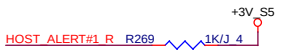

Intel ME Crypto Transport Layer Security (TLS) cipher suite
Low = Disable (Default)
High = Enable

PCBA SKU	Discrete	UMA
R277	Stuff	No Stuff
R275	No Stuff	Stuff

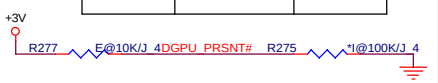

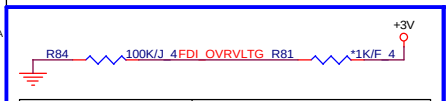

FDI TERMINATION VOLTAGE OVERRIDE	LOW - Tx, Rx terminated to same voltage

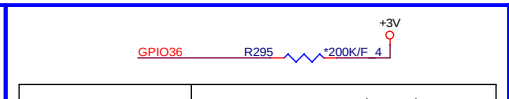

DMI TERMINATION VOLTAGE OVERRIDE	Low = Tx, Rx terminated to same voltage (DC Coupling Mode) (DEFAULT)

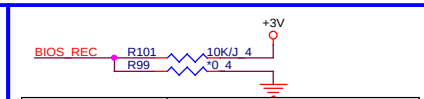

BIOS RECOVERY	High = Disable (Default) Low = Enable

MFG-TEST

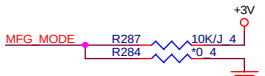

1.Level 1 Environment-related Substances Should Never be Used.
2.Recycled Resin and Coated Wire should be procured from Green Partners.

Quanta Computer Inc.
PROJECT :Huron River

Size	Document Number	Rev
	Cougar Point 4/6	1A

Date: Tuesday, April 05, 2011 Sheet 11 of 39

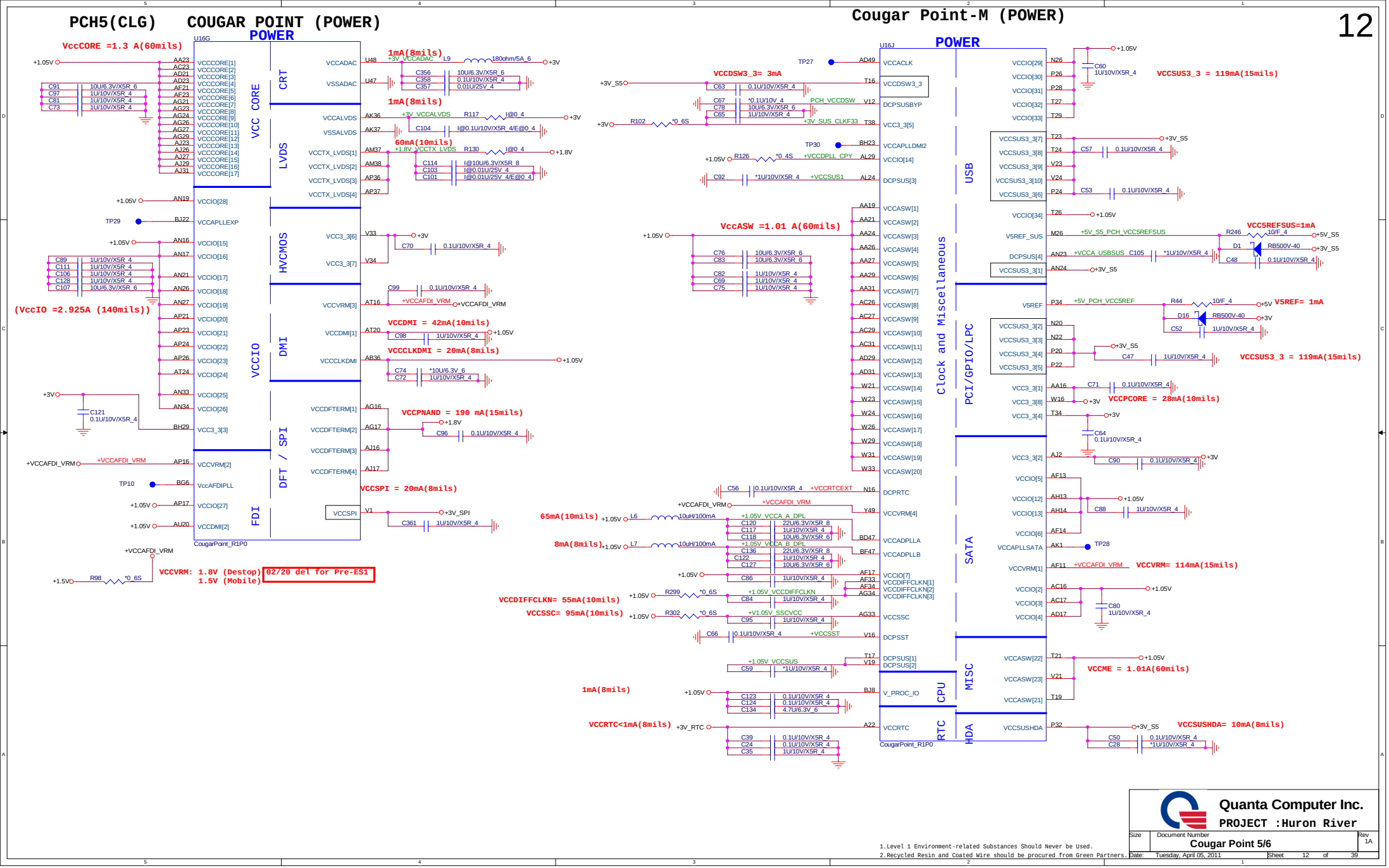
PCH5(CLG) COUGAR POINT (POWER)
Cougar Point-M (POWER)
12
POWER
U16G
U16J
VccCORE =1.3 A(60mils)
VCC CORE
CRT
LVDS
HVCMOS
DMI
VCCIO
DFT / SPI
FDI
1mA(8mils)
60mA(10mils)
(VccIO =2.925A (140mils))
VCCDMI = 42mA(10mils)
VCCCLKDMI = 20mA(8mils)
VCCPNAND = 190 mA(15mils)
VCCSPI = 20mA(8mils)
VCCVRM: 1.8V (Destop) 1.5V (Mobile)
02/20 del for Pre-ES1
VCCDSW3_3= 3mA
VccASW =1.01 A(60mils)
Clock and Miscellaneous
USB
PCI/GPIO/LPC
SATA
MISC
CPU
RTC
HDA
VCCSUS3_3 = 119mA(15mils)
VCC5REFSUS=1mA
V5REF= 1mA
VCCPCORE = 28mA(10mils)
VCCVRM= 114mA(15mils)
VCCME = 1.01A(60mils)
VCCSUSHDA= 10mA(8mils)
65mA(10mils)
8mA(8mils)
VCCDIFFCLKN= 55mA(10mils)
VCCSSC= 95mA(10mils)
1mA(8mils)
VCCRTC<1mA(8mils)
CougarPoint_R1P0
1.Level 1 Environment-related Substances Should Never be Used.
2.Recycled Resin and Coated Wire should be procured from Green Partners.
Quanta Computer Inc.
PROJECT :Huron River
Size
Document Number
Cougar Point 5/6
Rev
1A
Date: Tuesday, April 05, 2011
Sheet 12 of 39

PCH6(CLG) IBEX PEAK-M (GND)

1.Level 1 Environment-related Substances Should Never be Used.
2.Recycled Resin and Coated Wire should be procured from Green Partners.

Quanta Computer Inc.
PROJECT :Huron River

Size	Document Number	Rev
	Cougar Point 6/6	1A
Date: Monday, February 21, 2011	Sheet 13 of 39	

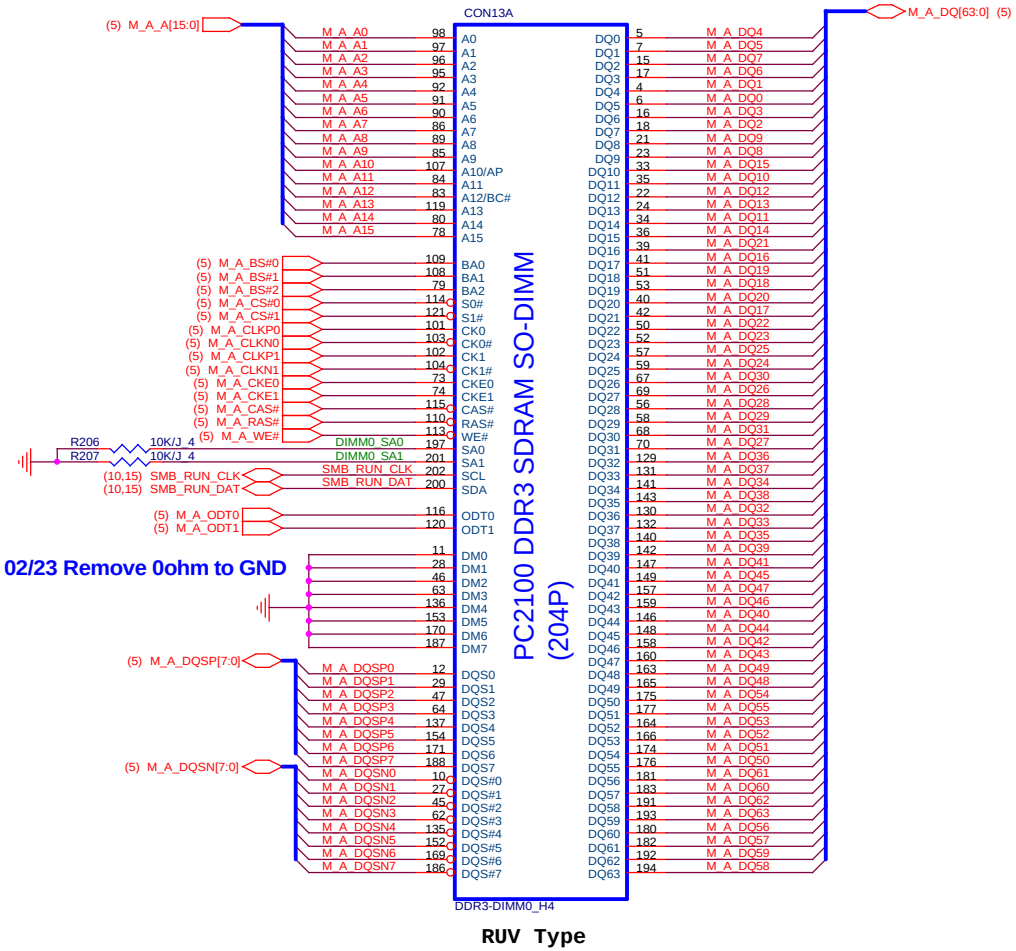

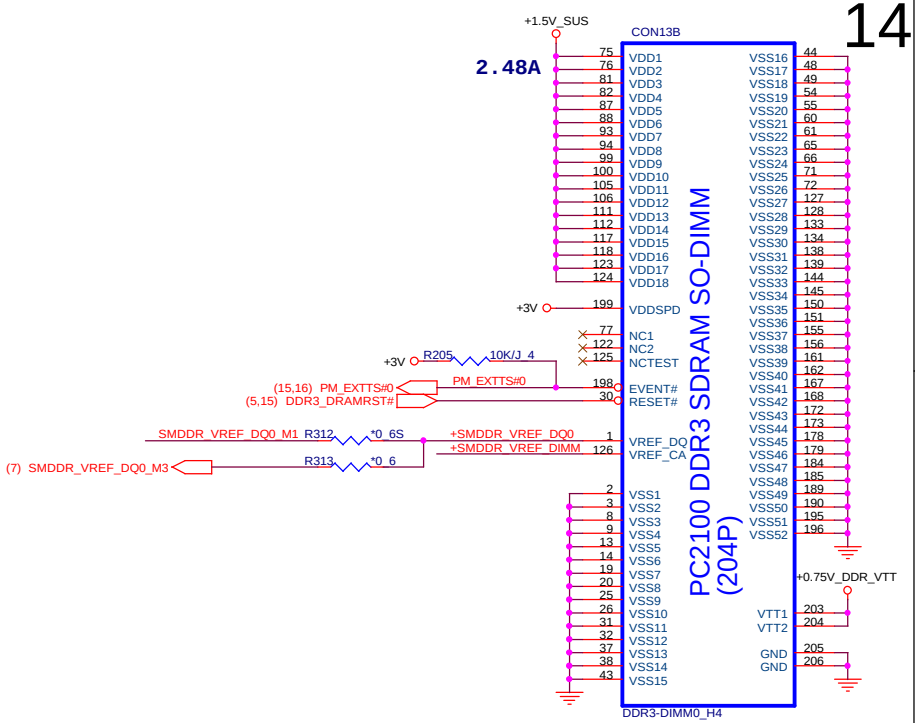

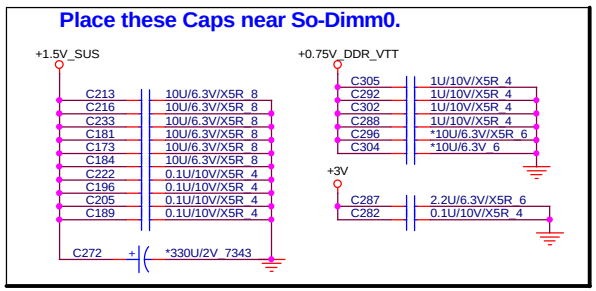

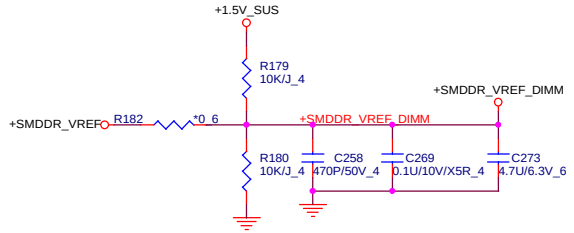

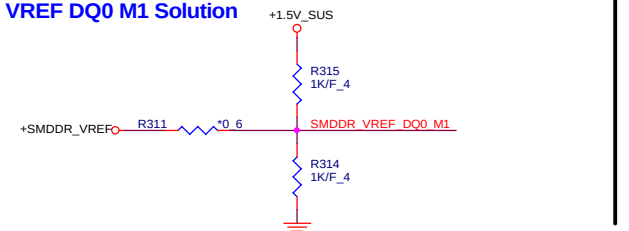

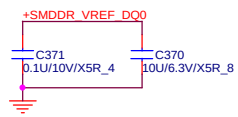

1.Level 1 Environment-related Substances Should Never be Used.
2.Recycled Resin and Coated Wire should be procured from Green Partners.

Quanta Computer Inc.
PROJECT :Huron River

Size	Document Number	Rev
	DDRIII SO-DIMM-0	1A
Date: Tuesday, April 05, 2011	Sheet 14 of 39	

DDR_RVS(DDR)

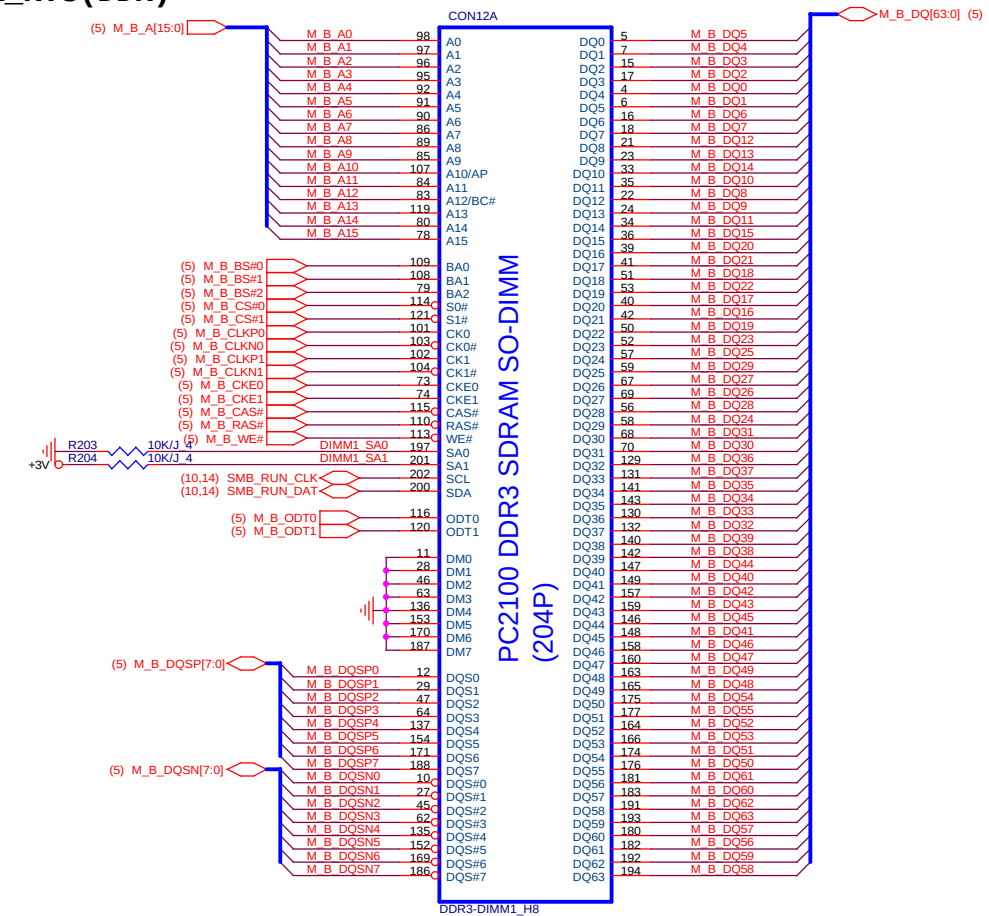

RUV Type

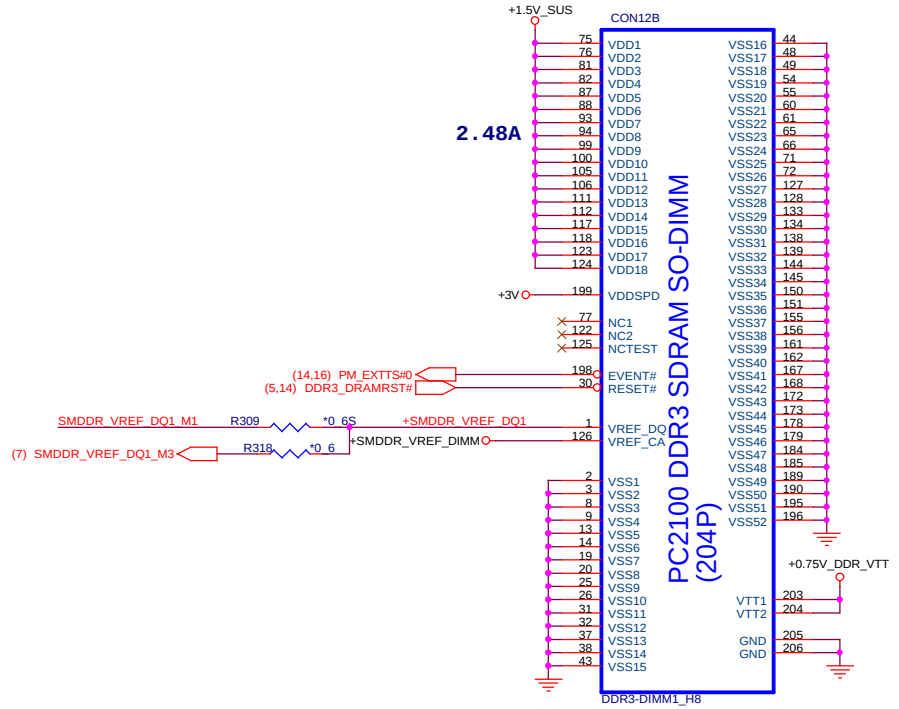

RUV Type

VREF DQ1 M1 Solution

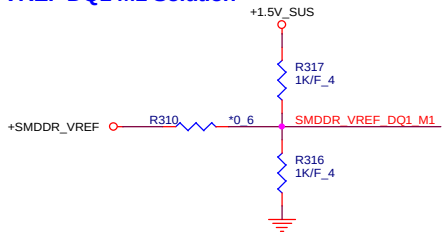

Place these Caps near So-Dimm1.

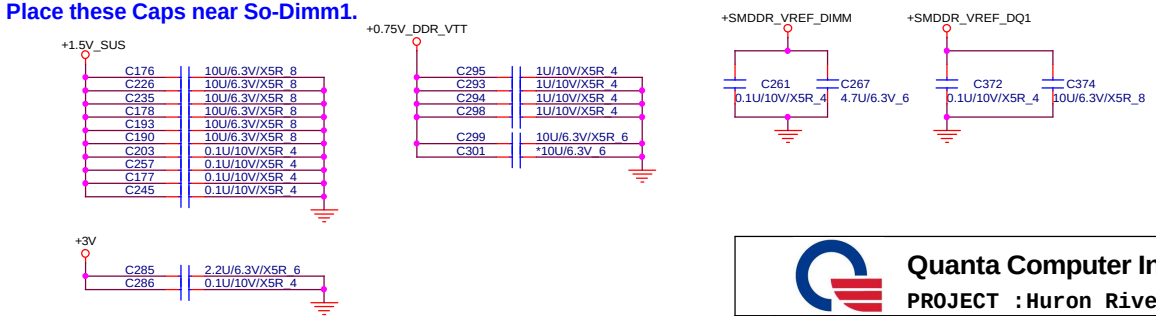

1.Level 1 Environment-related Substances Should Never be Used.
2.Recycled Resin and Coated Wire should be procured from Green Partners.

Quanta Computer Inc.
PROJECT :Huron River

Size	Document Number	Rev
	DDRIII SO-DIMM-1	1A
Date: Tuesday, April 05, 2011	Sheet 15 of 39	

**** Straping Pin,Can not pull low.**
Note the input leakage current to the strap pins must be less than 10uA.

Since ECSCI is OD, no need for a back-drive protection diode on this signal. But note there is internal PU in chipset at default

35001

16

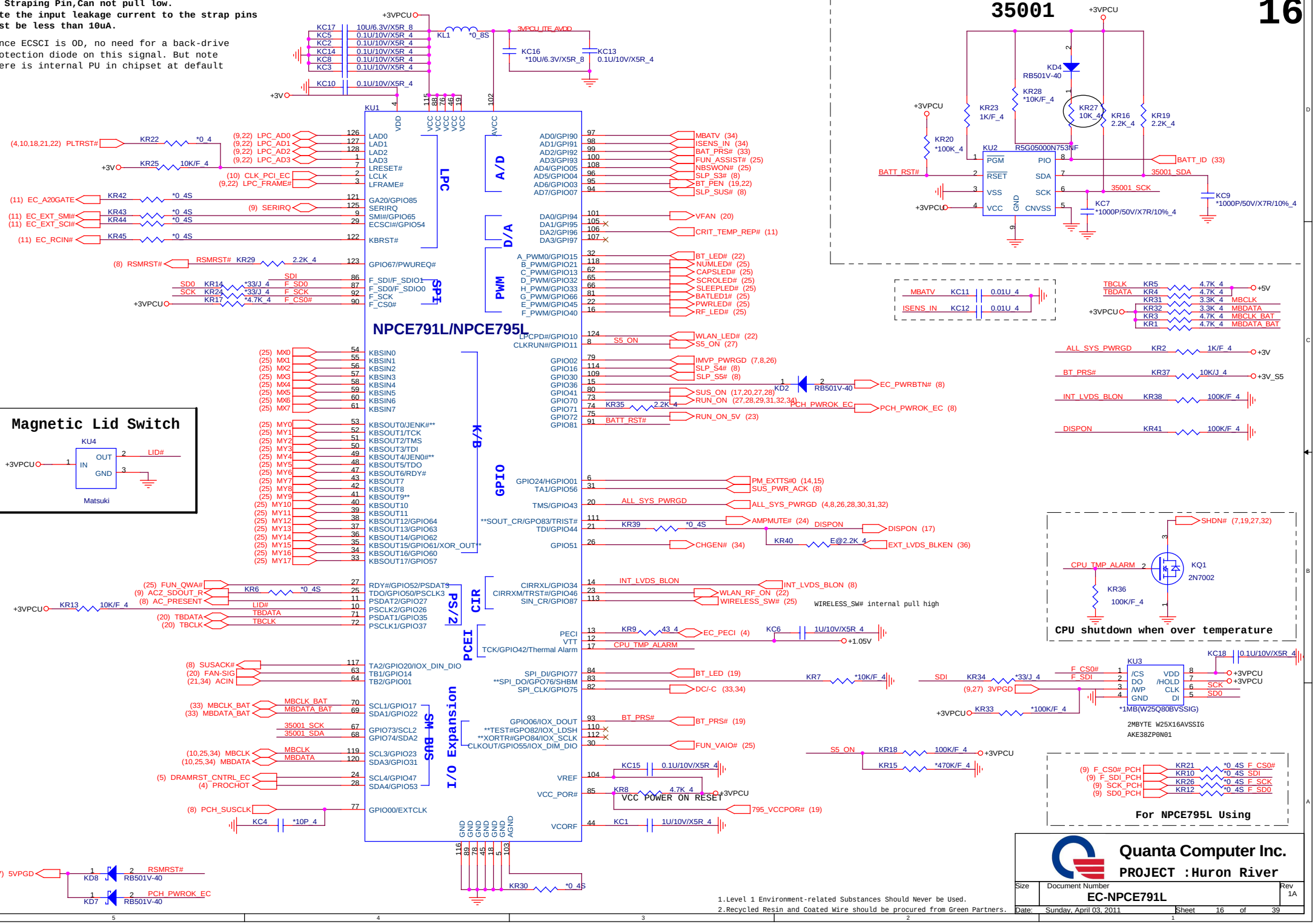

1.Level 1 Environment-related Substances Should Never be Used.
2.Recycled Resin and Coated Wire should be procured from Green Partners.

Quanta Computer Inc.
PROJECT :Huron River

Size	Document Number	Rev
	EC-NPCE791L	1A
Date: Sunday, April 03, 2011	Sheet 16 of 39	

CRT

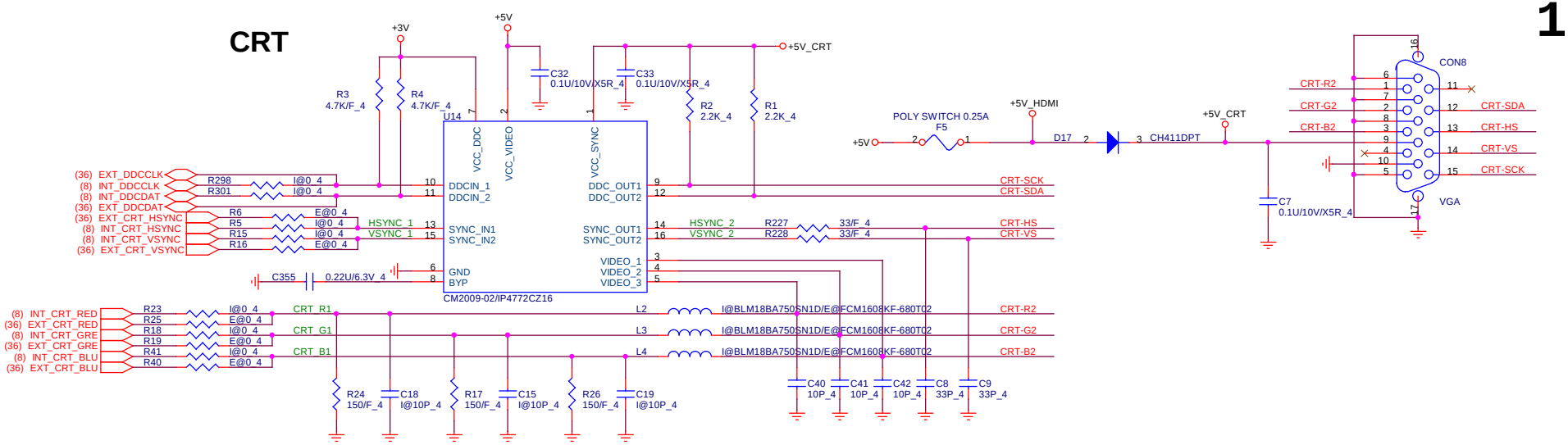

USB Camera Power

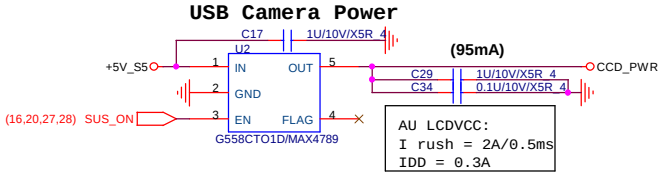

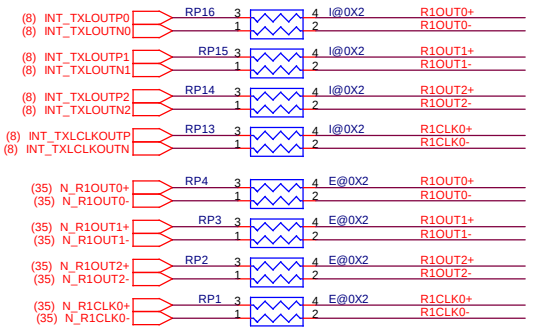

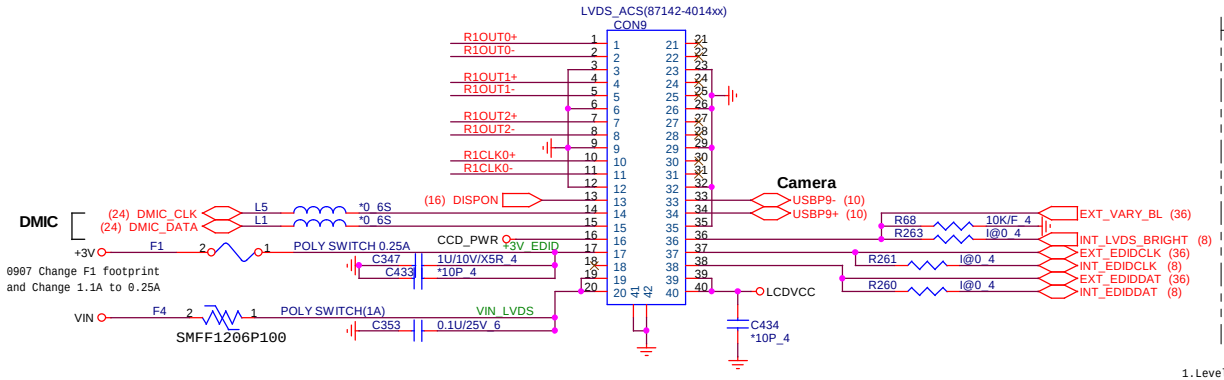

NB LVDS enable

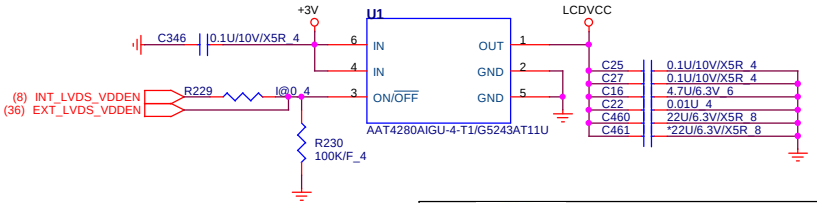

1.Level 1 Environment-related Substances Should Never be Used.
2.Recycled Resin and Coated Wire should be procured from Green Partners.

Quanta Computer Inc.
PROJECT :Huron River

Size	Document Number	Rev
	CRT/LVDS	1A
Date: Tuesday, April 05, 2011	Sheet 17 of 39	

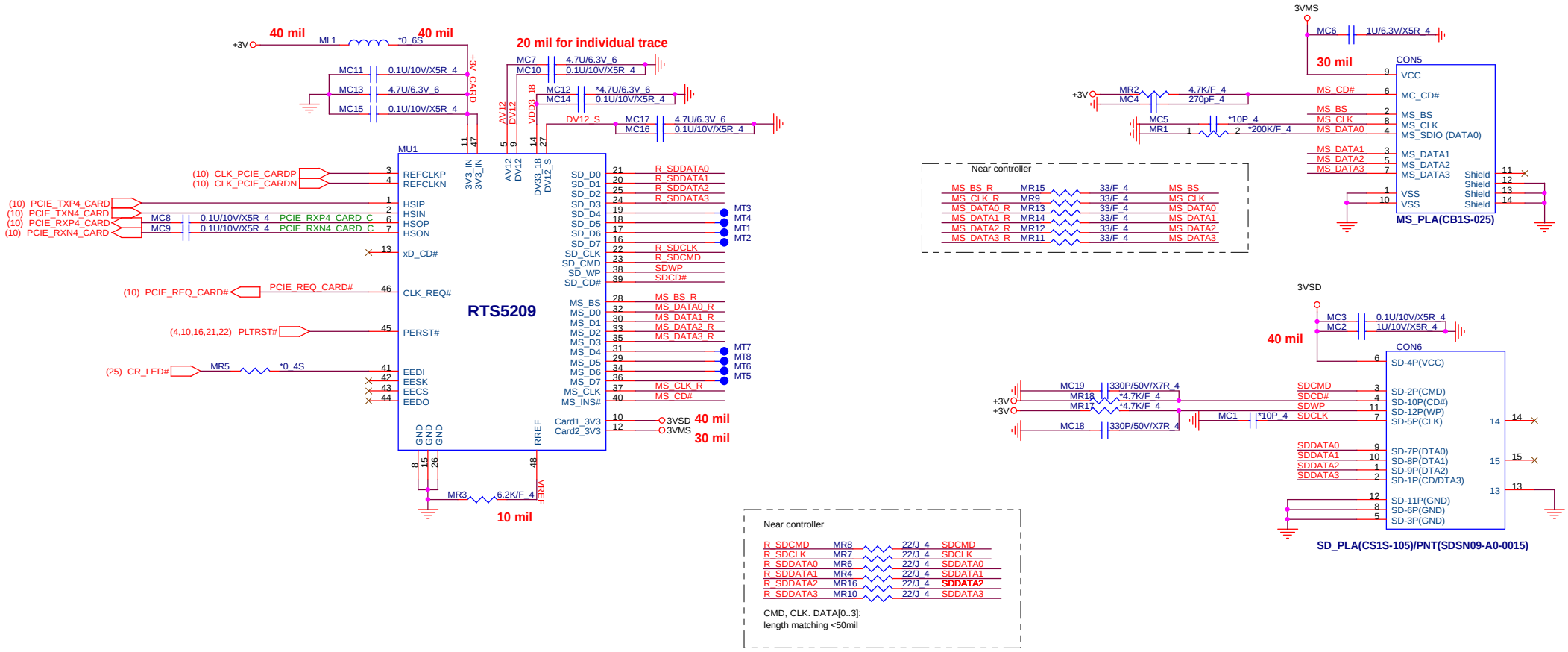

1.Level 1 Environment-related Substances Should Never be Used.
2.Recycled Resin and Coated Wire should be procured from Green Partners.

Quanta Computer Inc.
PROJECT :Huron River

Size	Document Number	Rev
	CARD	1A
Date: Monday, February 21, 2011	Sheet 18 of 39	

HDMI

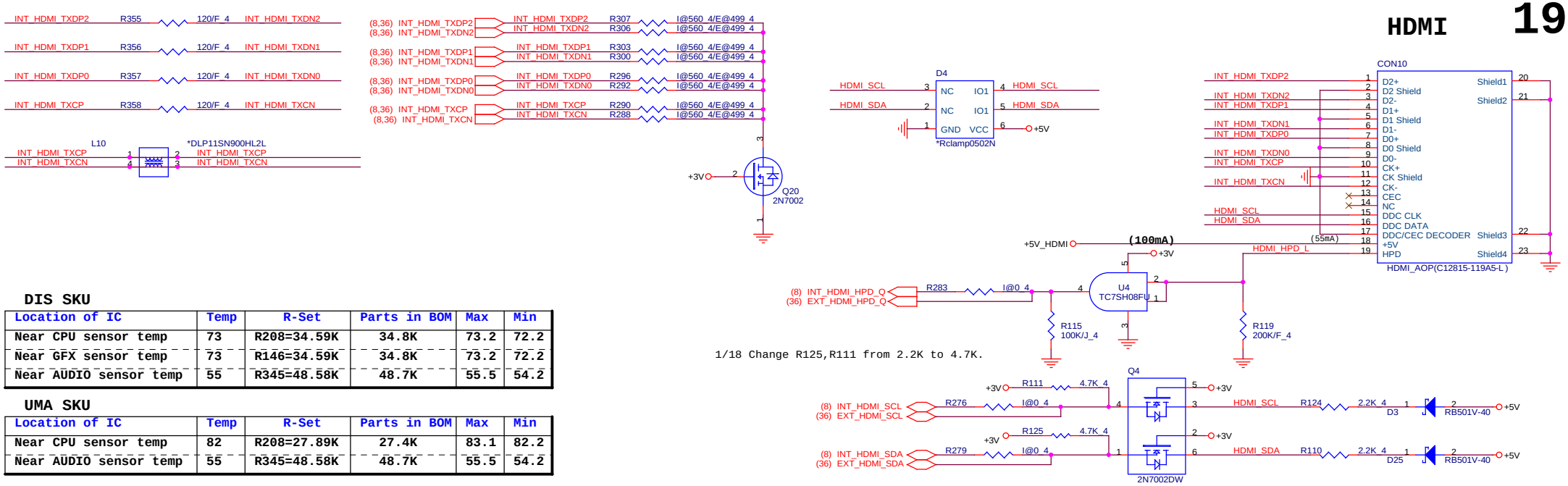

DIS SKU

Location of IC	Temp	R-Set	Parts in BOM	Max	Min
Near CPU sensor temp	73	R208=34.59K	34.8K	73.2	72.2
Near GFX sensor temp	73	R146=34.59K	34.8K	73.2	72.2
Near AUDIO sensor temp	55	R345=48.58K	48.7K	55.5	54.2

UMA SKU

Location of IC	Temp	R-Set	Parts in BOM	Max	Min
Near CPU sensor temp	82	R208=27.89K	27.4K	83.1	82.2
Near AUDIO sensor temp	55	R345=48.58K	48.7K	55.5	54.2

H/W Thermal Protect

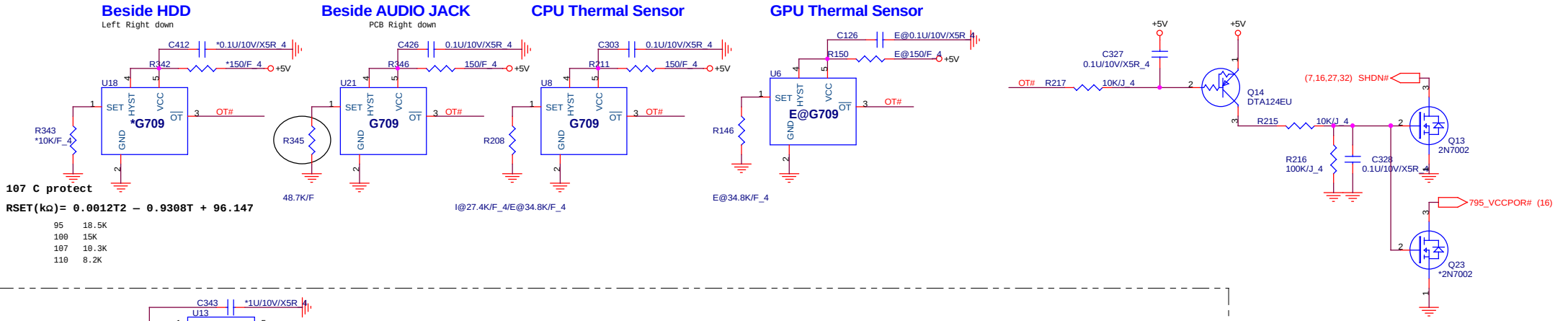

Bluetooth

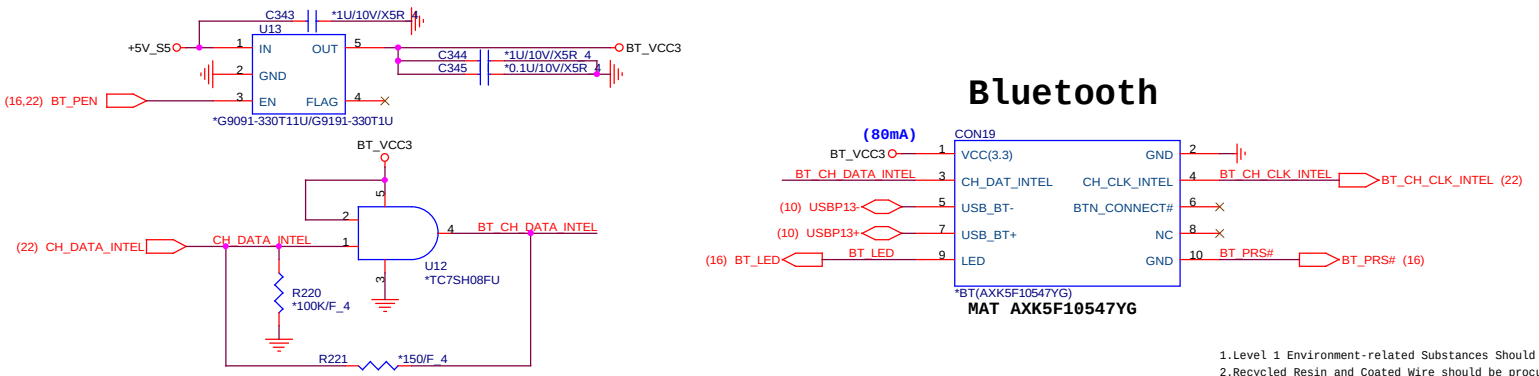

1.Level 1 Environment-related Substances Should Never be Used.
2.Recycled Resin and Coated Wire should be procured from Green Partners.

Quanta Computer Inc.
PROJECT :Huron River

Size	Document Number	Rev
	HDMI/Bluetooth/Thermal IC	3A
Date: Wednesday, April 06, 2011	Sheet 19 of 39	

MB to USB board

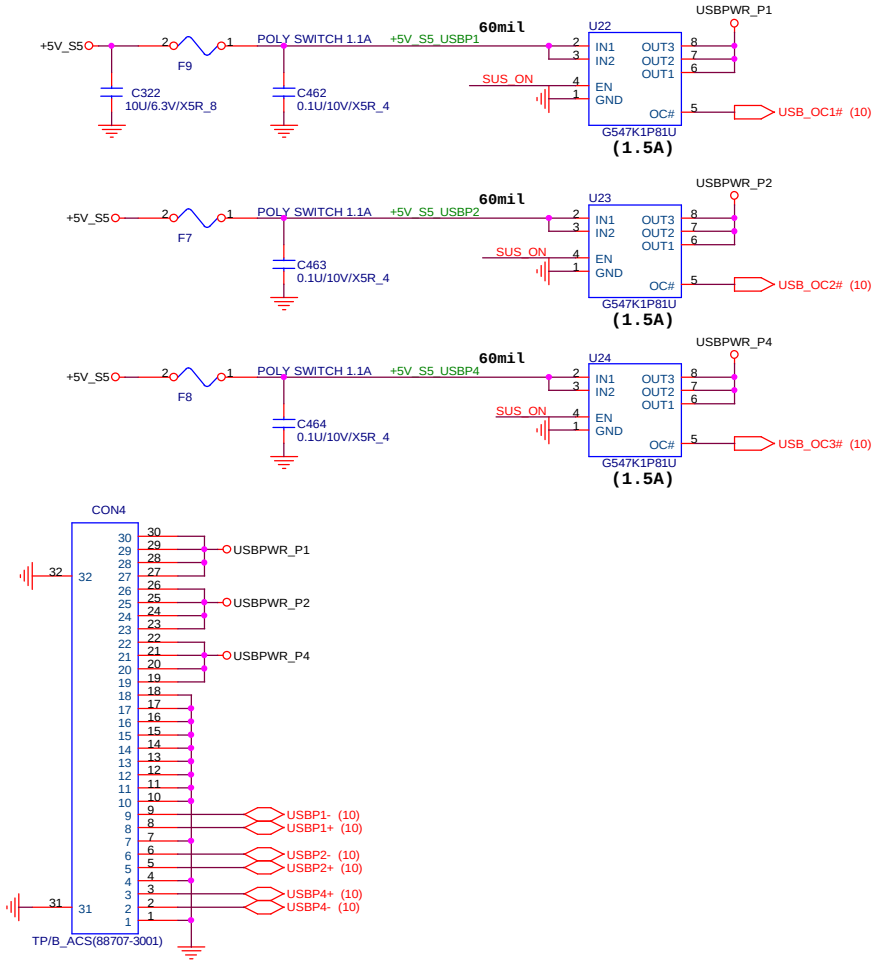

USB PORT 0

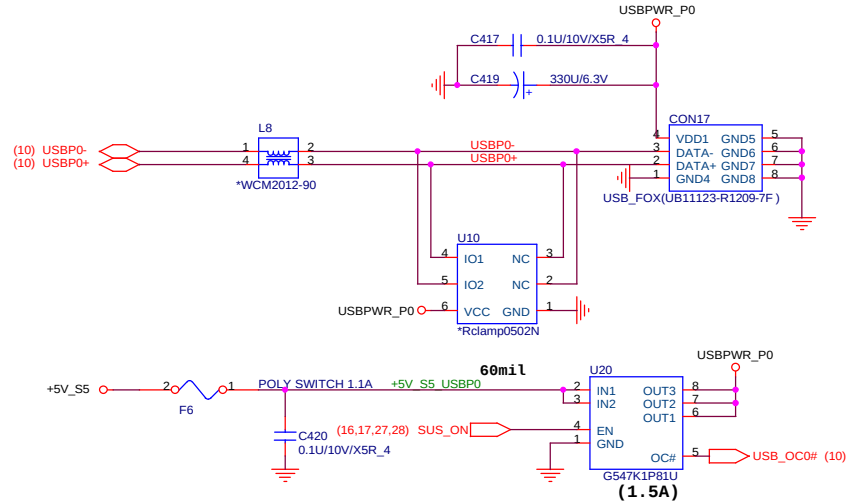

T/P Board to T/P

9/13 change F2 P/N from 0.12A to 0.25A

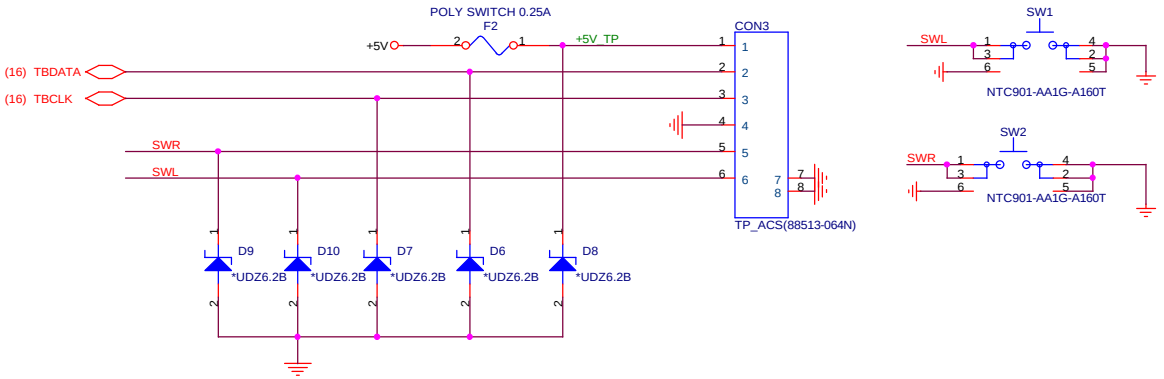

FAN

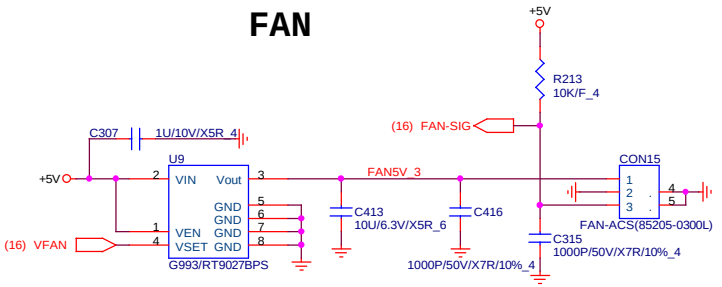

1.Level 1 Environment-related Substances Should Never be Used.
2.Recycled Resin and Coated Wire should be procured from Green Partners.

Quanta Computer Inc.
PROJECT :Huron River

Size	Document Number	Rev
	USB/TP/FAN	1A
Date: Monday, February 21, 2011	Sheet 20 of 39	

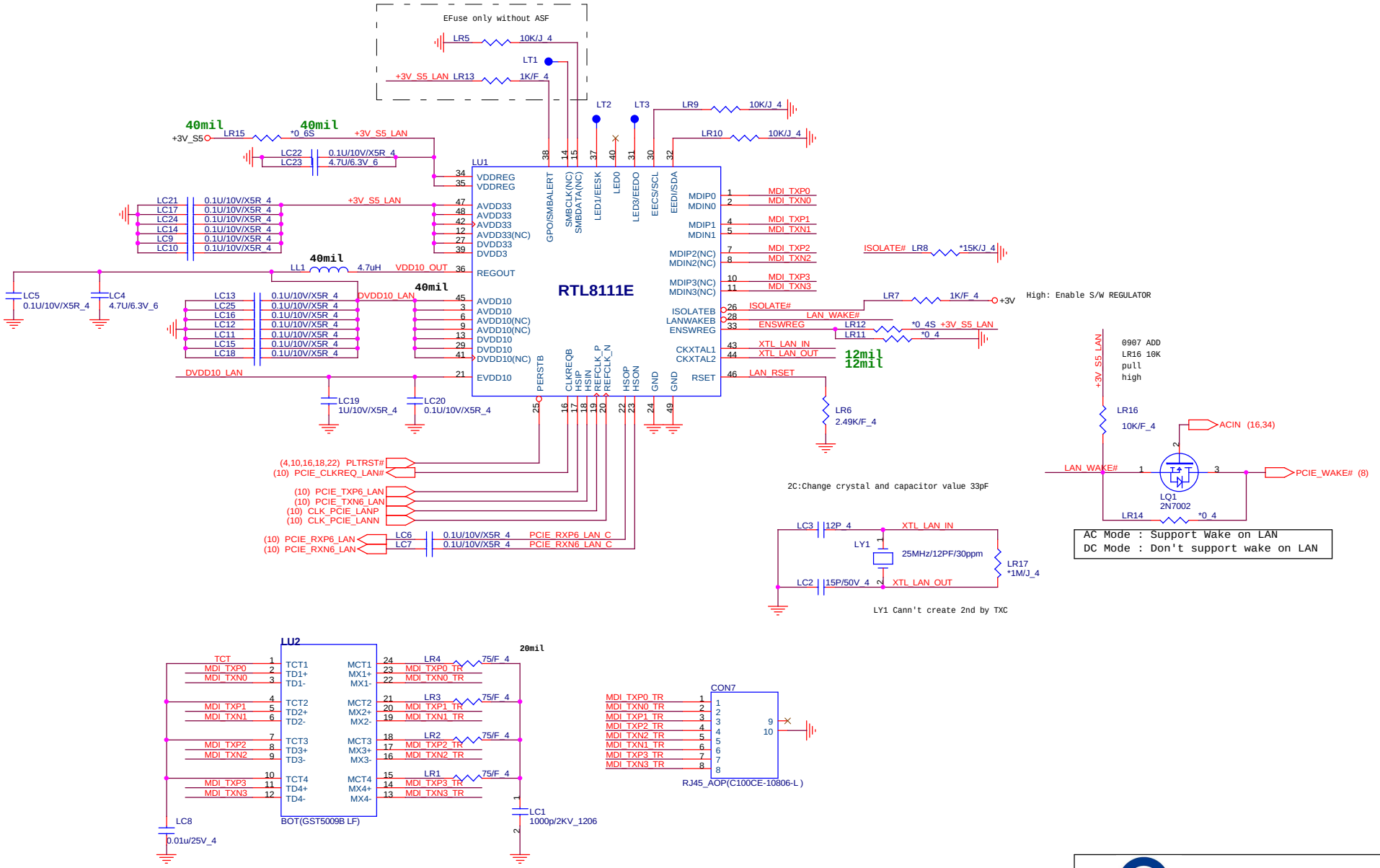

1.Level 1 Environment-related Substances Should Never be Used.
2.Recycled Resin and Coated Wire should be procured from Green Partners.

Quanta Computer Inc.
PROJECT : Huron River

Size	Document Number	Rev
	LAN RTL8111E	1A
Date: Tuesday, April 05, 2011	Sheet 21 of 39	

WLAN/WIMAX/WIDI

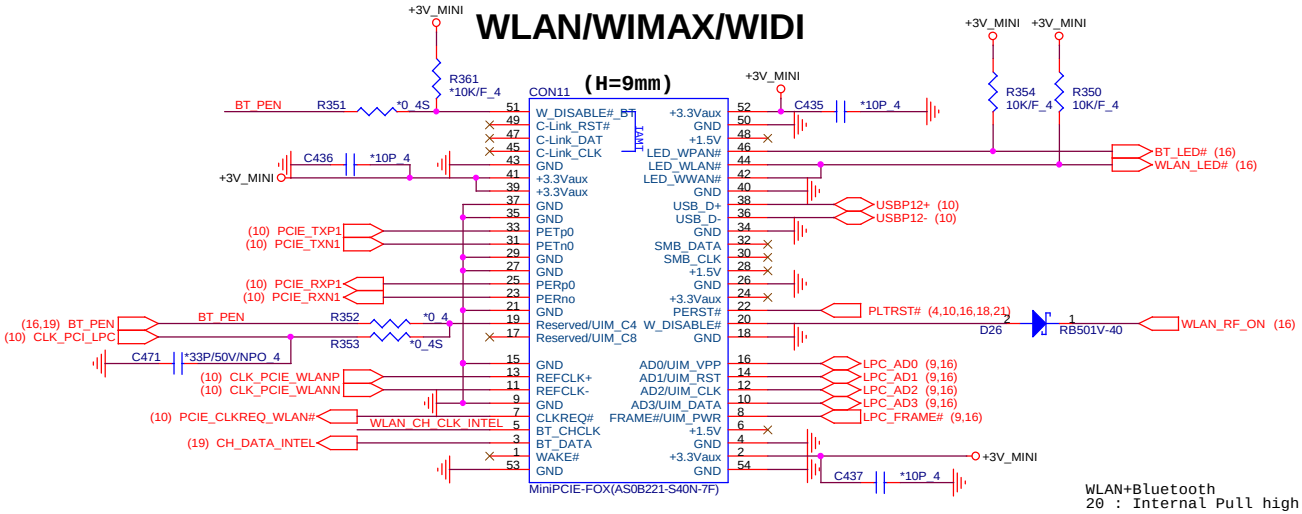

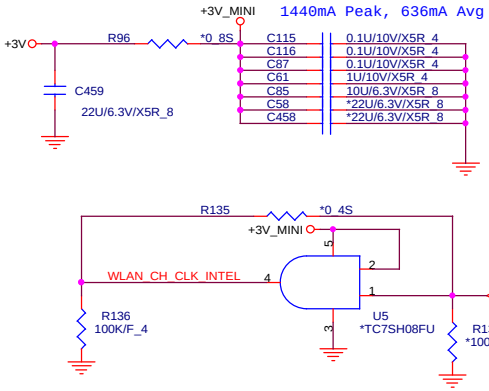

WLAN+Bluetooth
20 : Internal Pull high 25K ~ 58K

HOLE

WLAN

H8 H-C197D158P2

BT

H22 H-C157D102PB

H1 *O-HK1-1

H10 *O-HK1-3 H19 *O-HK1-3 H16 *O-HK1-3 H18 *O-HK1-4 H23 *O-HK1-5

H25 *O-HK1-6 H9 *O-HK1-10 H24 *O-HK1-7 H15 *O-HK1-8 H11 *O-HK1-9 H4 *O-HK1-11 H7 *O-HK1-12

H6 h-tc197bsd157p2 H28 h-tc197bsd157p2 H27 H-C197D158P2 H26 *H-C197D158P2 H14 *O-HK1-16 H12 *O-HK1-15 H3 *H-C177D91PT H2 *H-C177D91PT H20 *O-HK1-14 H17 *O-HK1-13 H21 *SPAD-RE106X371 H29 *SPAD-HK1-0915 H37 *spad-daom-1np H34 *HG-TSBSD102P2

H38 *spad-daom-2np H13 *O-HK1-17

H30 *SPAD-RE177X79 H31 *SPAD-RE177X79 H32 *SPAD-RE177X79 H33 *SPAD-RE177X79 H35 *SPAD-RE99X296NP H36 *SPAD-RE99X296NP

H39 *HK1-A H40 *HK1-B H41 *HK1-C H42 *HK1-D H43 *HK1-E H44 *HK1-F H45 *HK1-G H46 *HK1-H H47 *HK1-I H48 *HK1-J H49 *HK1-K H50 *HK1-L H51 *HK1-M H52 *HK1-N H53 *HK1-N H54 *HK1-N H55 *HK1-N

1.Level 1 Environment-related Substances Should Never be Used.
2.Recycled Resin and Coated Wire should be procured from Green Partners.

Quanta Computer Inc.
PROJECT :Huron River

Size	Document Number	Rev
	WLAN/WIMAX/WIDI	1A

Date: Tuesday, April 05, 2011 Sheet 22 of 39

ODD CONNECTOR

8/18 Change HDD 2nd source connector patt number

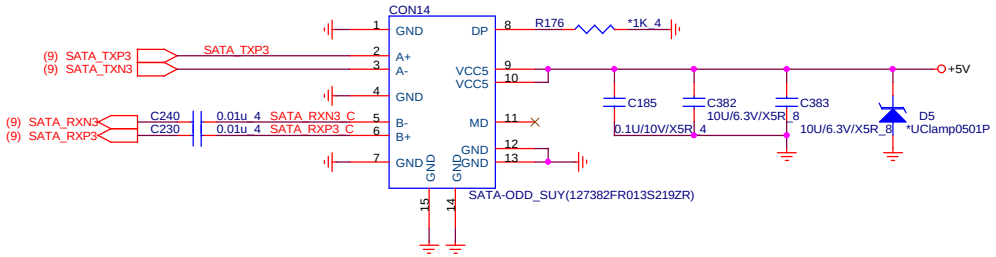

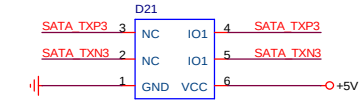

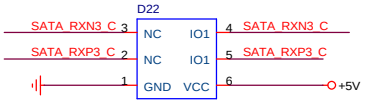

9/13 Add ESD prptection D21,D22 IC for ODD

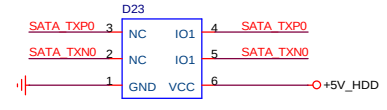

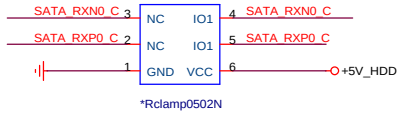

9/13 Add ESD prptection D23,D24 IC for HDD

HDD CONNECTOR

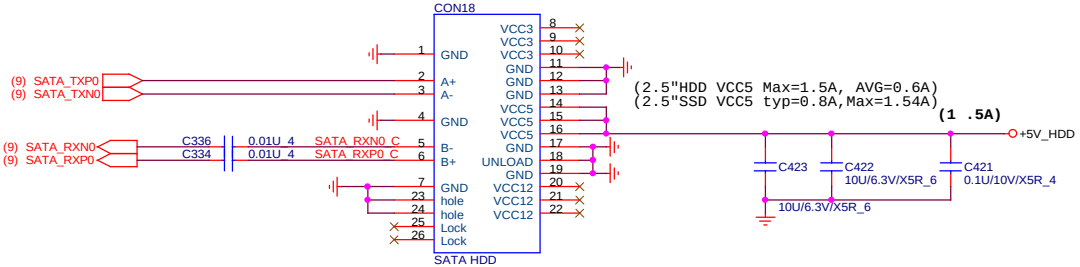

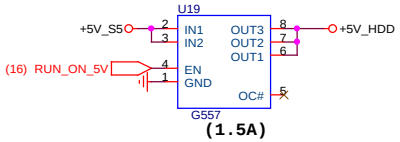

1/18 Change U19 from G547 to G557.

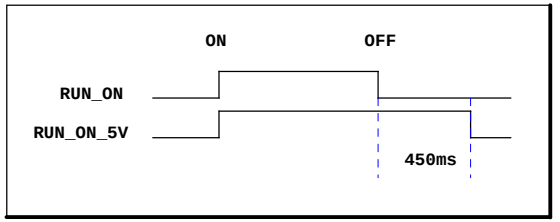

EMI

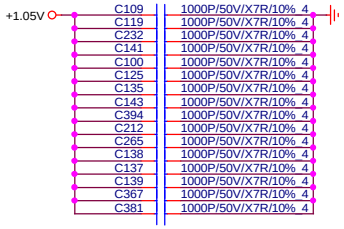

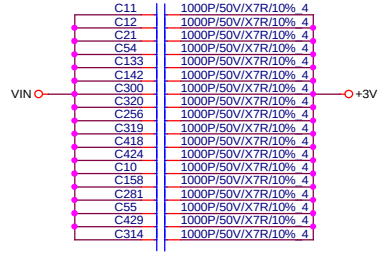

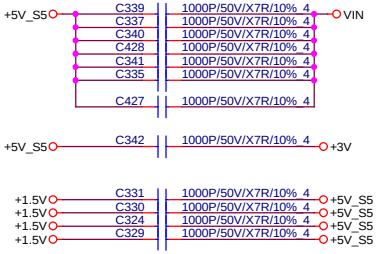

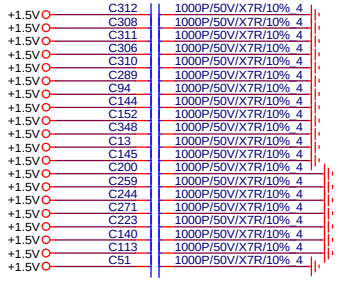

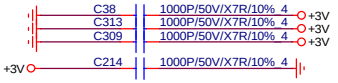

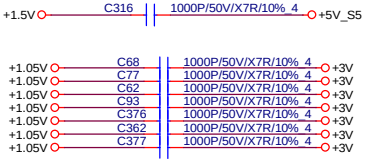

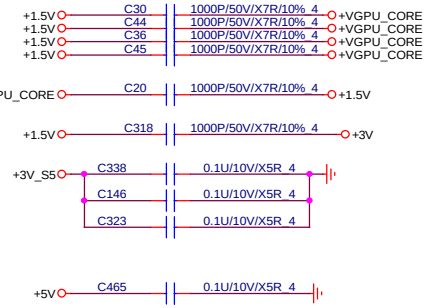

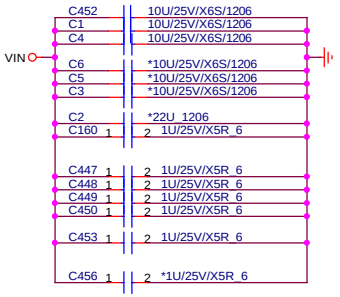

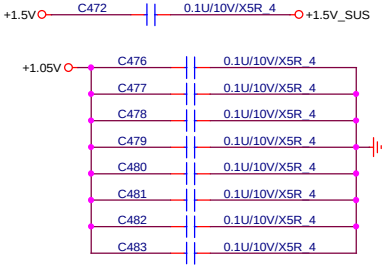

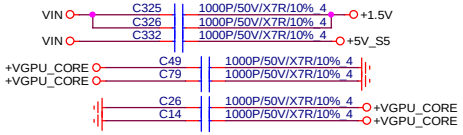

1.Level 1 Environment-related Substances Should Never be Used.
2.Recycled Resin and Coated Wire should be procured from Green Partners.

Quanta Computer Inc.
PROJECT :Huron River

Size	Document Number	Rev
	HDD/ODD	1A
Date: Monday, February 21, 2011	Sheet 23 of 39	

AVDD_3.3 pin is output of internal LDO. Do NOT connect to external supply.
Layout Note: Path from +5V to LPWR_5.0 and RPWR_5.0 must be very low resistance (<0.01 ohms).

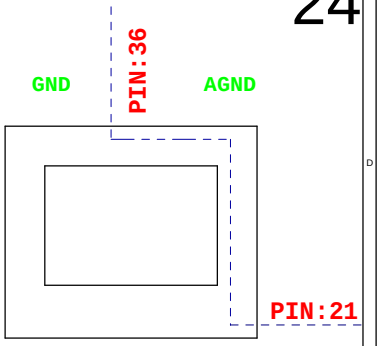

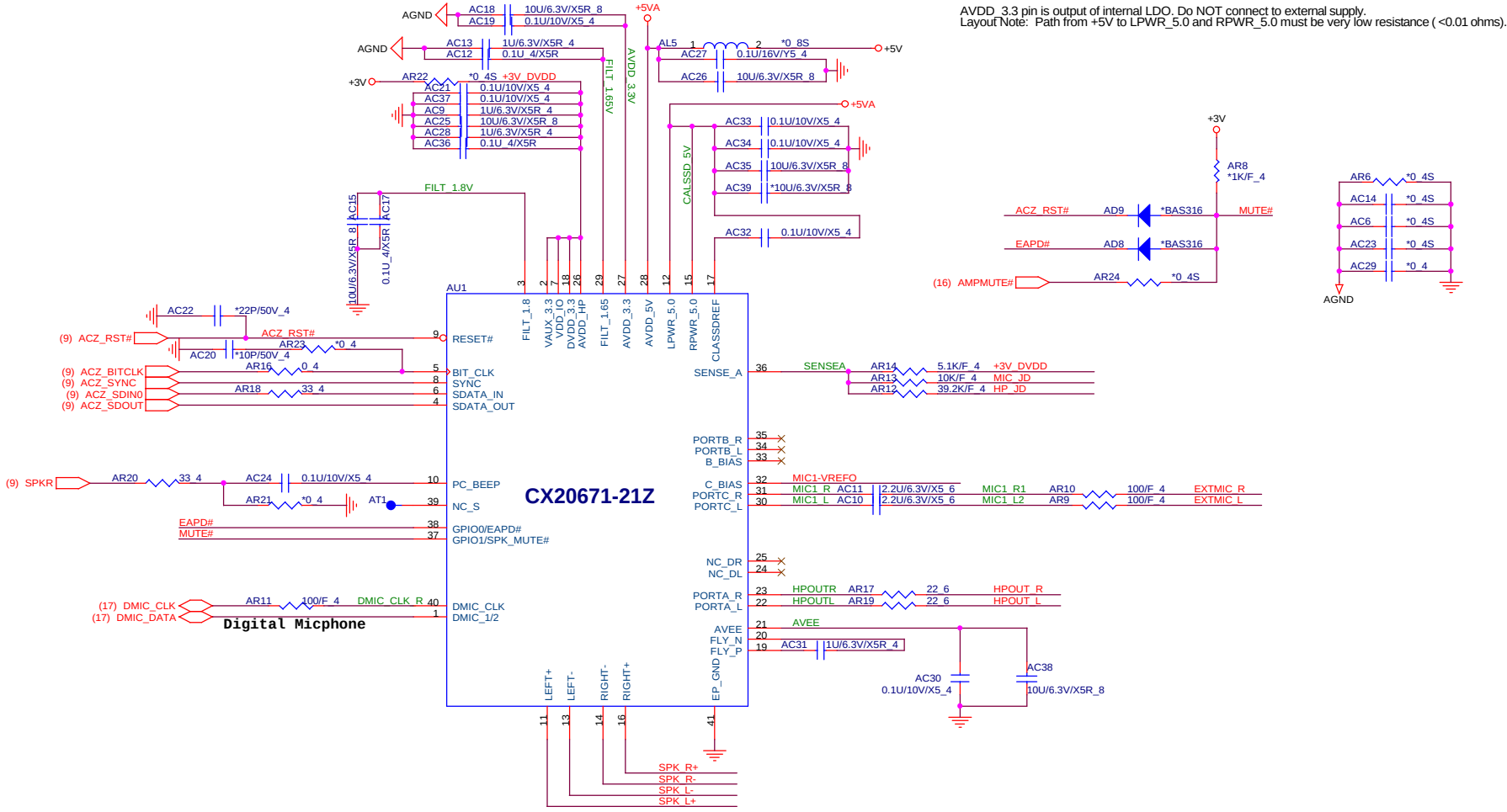

1/18 Change AL1,AL2,AL3,AL4 from 0ohm to short pad.

1/18 Change AL1~AL4 footprint from 0ohm to short pad

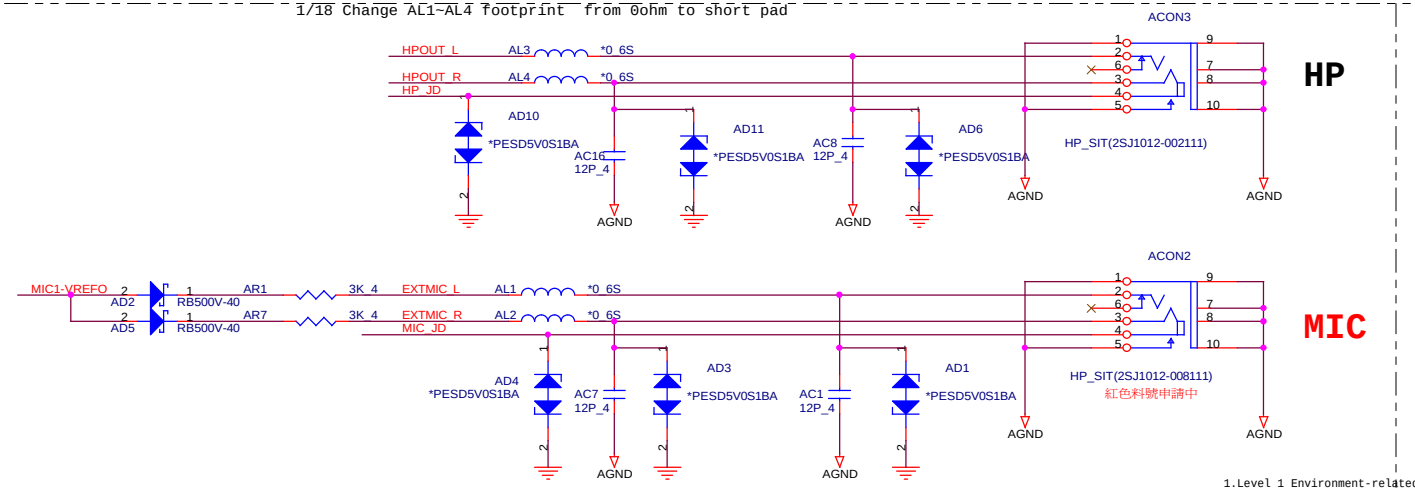

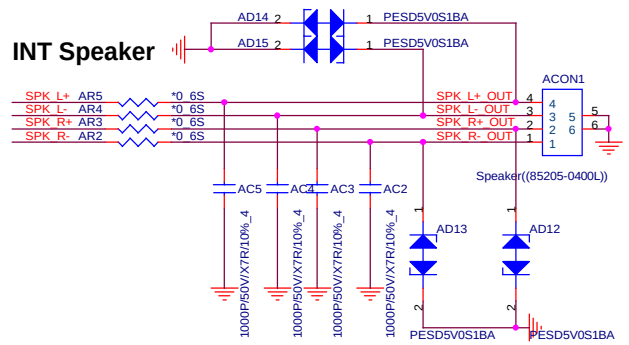

1.Level 1 Environment-related Substances Should Never be Used.
2.Recycled Resin and Coated Wire should be procured from Green Partners.

Quanta Computer Inc.
PROJECT : Huron River

Size	Document Number	Rev
	Audio Codec CX20671	1A
Date: Tuesday, April 05, 2011	Sheet 24 of 39	

WIRELESS/Bluetooth SWITCH

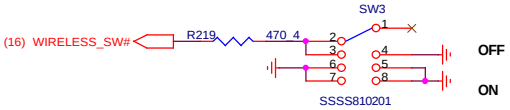

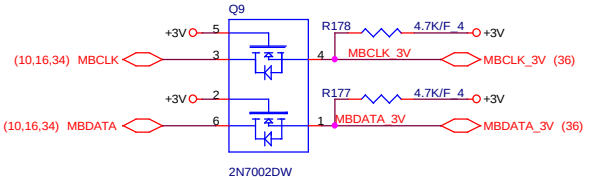

RF LED

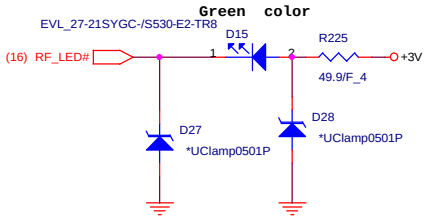

SATA LED

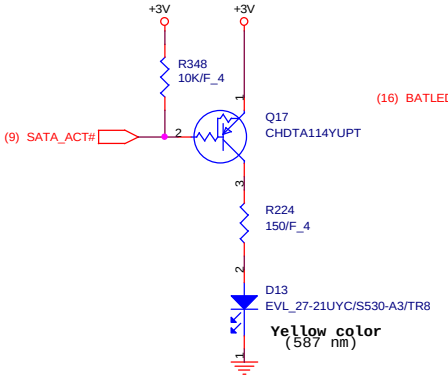

BATTERY LED

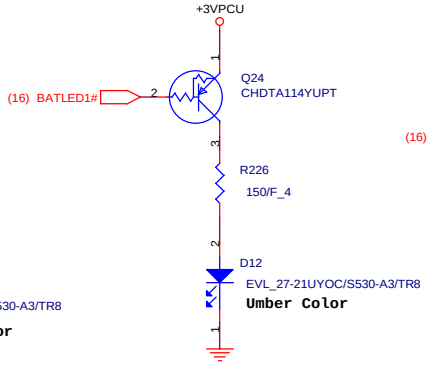

Power/Sleep LED

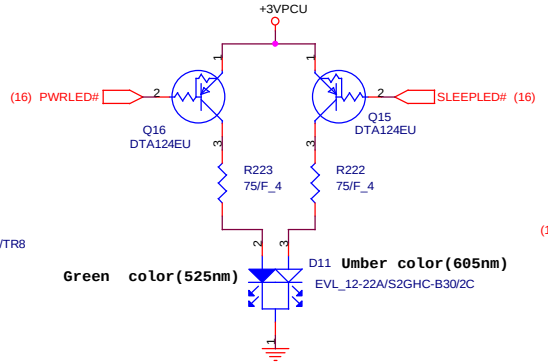

CARD LED

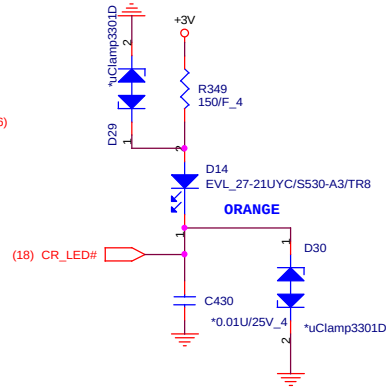

KEY BOARD Connector

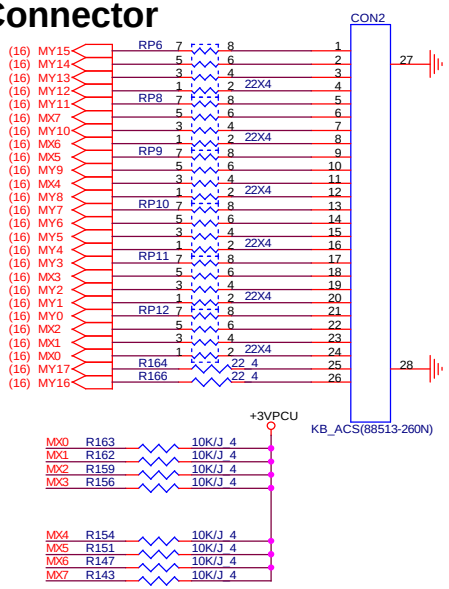

Power SW Board Connector

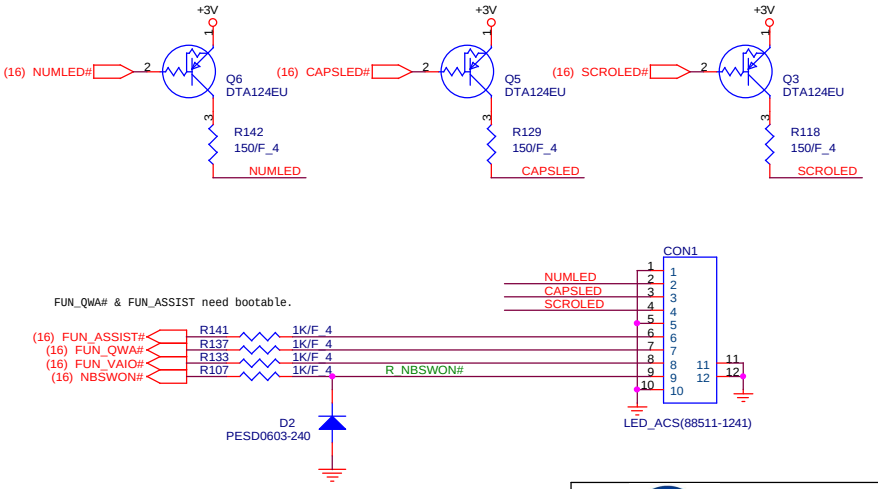

1.Level 1 Environment-related Substances Should Never be Used.
2.Recycled Resin and Coated Wire should be procured from Green Partners.

Quanta Computer Inc.
PROJECT :Huron River

Size	Document Number	Rev
	LED/RF/KB/PS	1A
Date:	Wednesday, April 06, 2011	Sheet 25 of 39

GFX_CORE LL: -3.9mV/A (OCP40A, PR142: 2.49K) - GT2

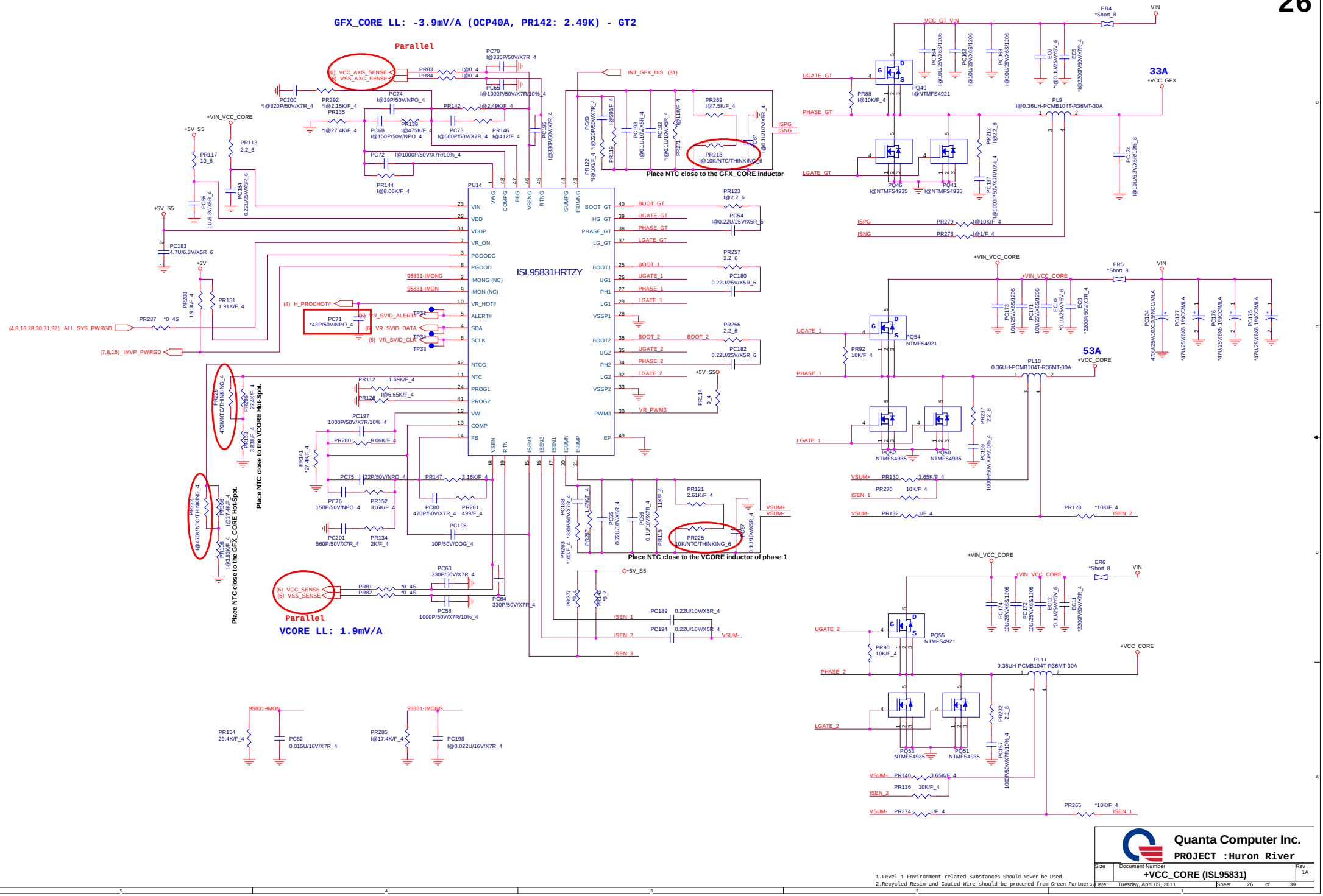

1.Level 1 Environment-related Substances Should Never be Used.
2.Recycled Resin and Coated Wire should be procured from Green Partners.

Quanta Computer Inc.
PROJECT :Huron River

Size	Document Number	Rev
	+VCC_CORE (ISL95831)	1A
Date: Tuesday, April 05, 2011	Sheet 26 of 39	

3.3V & 5V

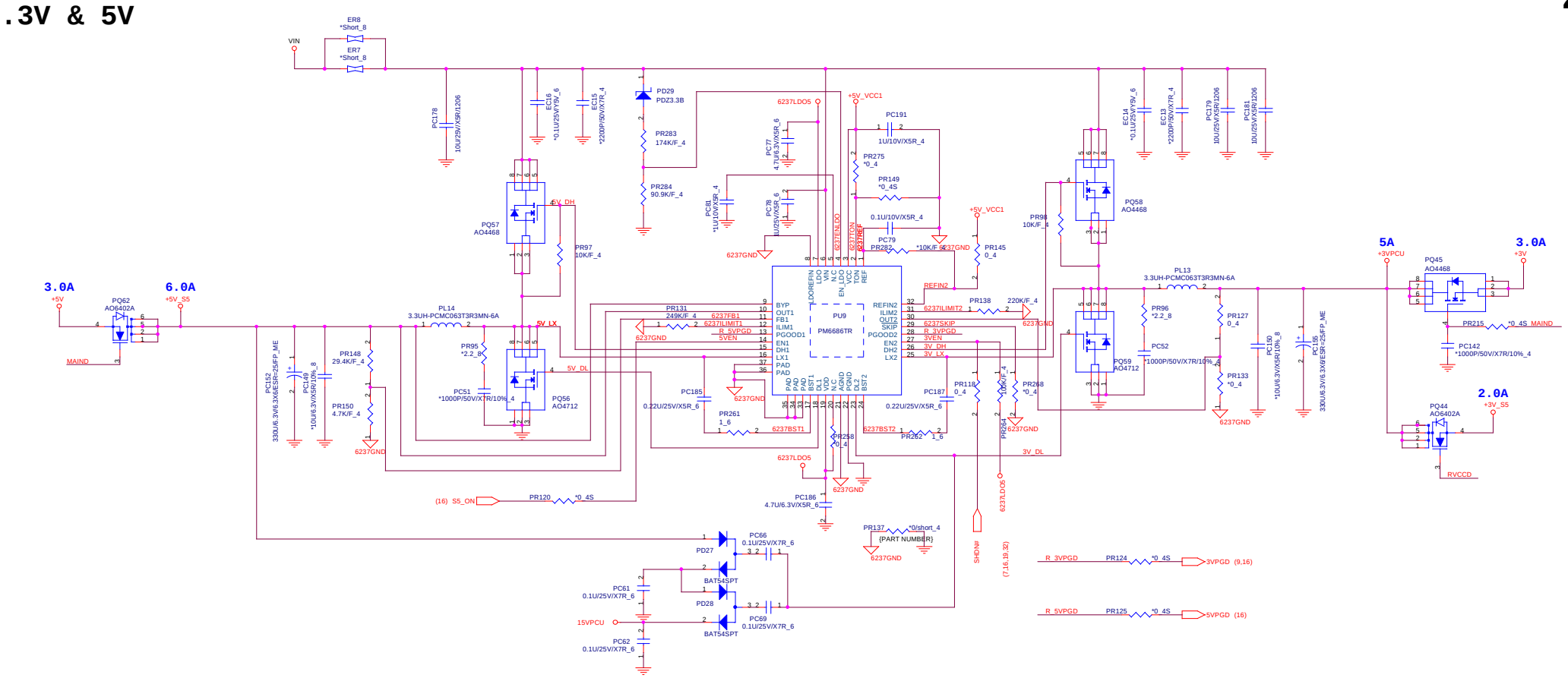

1.Level 1 Environment-related Substances Should Never be Used.
2.Recycled Resin and Coated Wire should be procured from Green Partners.

Quanta Computer Inc.
PROJECT : Huron River

Size	Document Number	Rev
	3VPCU&5VPCU(PM6686)	1A
Date: Tuesday, April 05, 2011	Sheet 27 of 39	

1.5VSUS & VTT_MEM

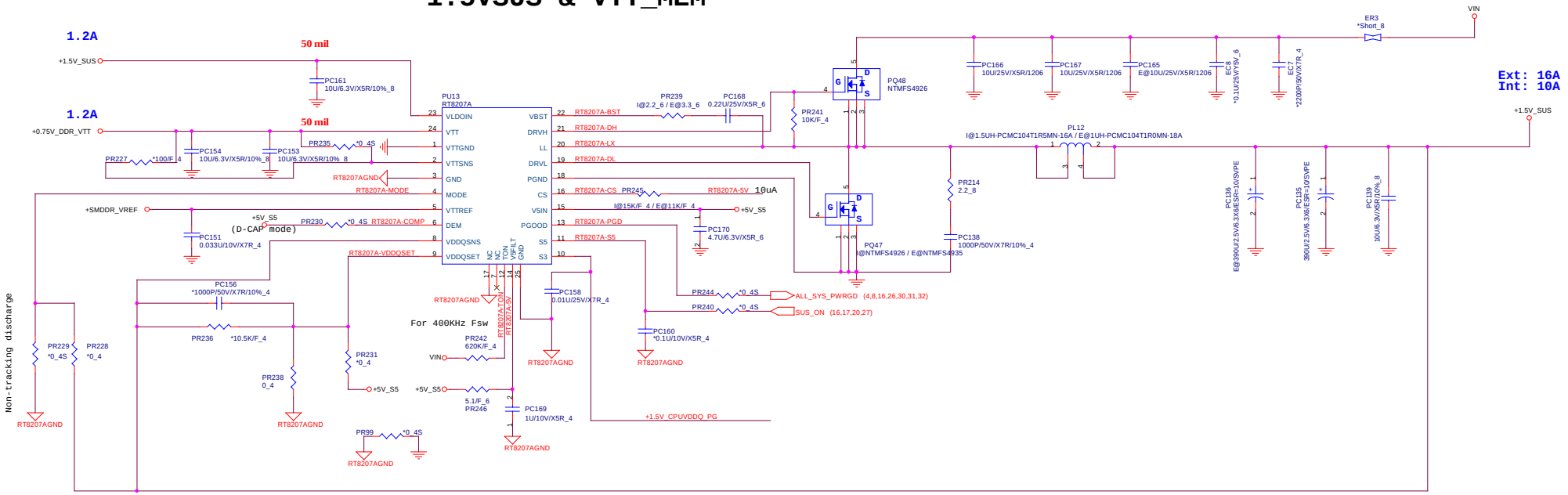

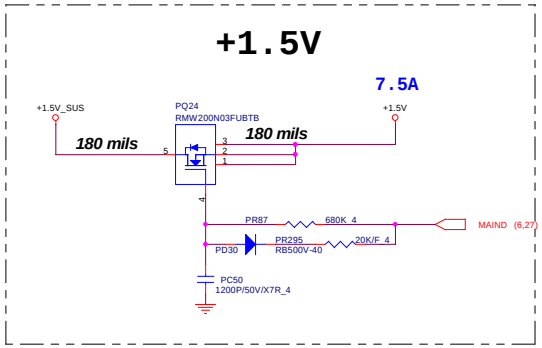

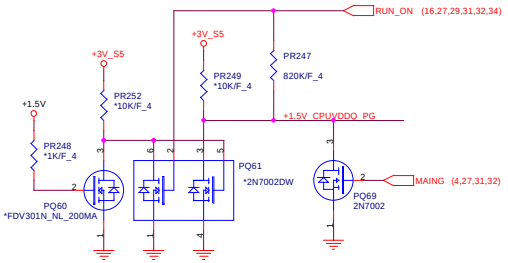

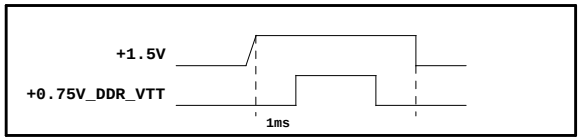

MODE	DISCHARGE MODE
+5V	No discharge
+1.5V	Tracking discharge
GND	Non-tracking discharge

VDDQSET	VDDQ(V)	VTTREF & VTT	NOTE
GND	1.5 fixed	VDDQSNS/2	DDR3
5V	1.8 fixed	VDDQSNS/2	DDR2
FB-Resistor	Adjustable	VDDQSNS/2	1.5V<VDDQ<3V

VTT = VTTREF = VDDQSNS/2 = 0.75V

STATE	S3	S5	1.5VSUS	VTTREF	VTT
S0	1	1	on	on	on
S3	0	1	on	on	off
S4/S5	0	0	off	off	off

1.Level 1 Environment-related Substances Should Never be Used.
2.Recycled Resin and Coated Wire should be procured from Green Partners.

Quanta Computer Inc.
PROJECT : Huron River

Size	Document Number	Rev
	1.5VSUS/VTT_MEM	1A
Date: Tuesday, April 05, 2011	Sheet 28 of 39	

+1.05V / 15.0A

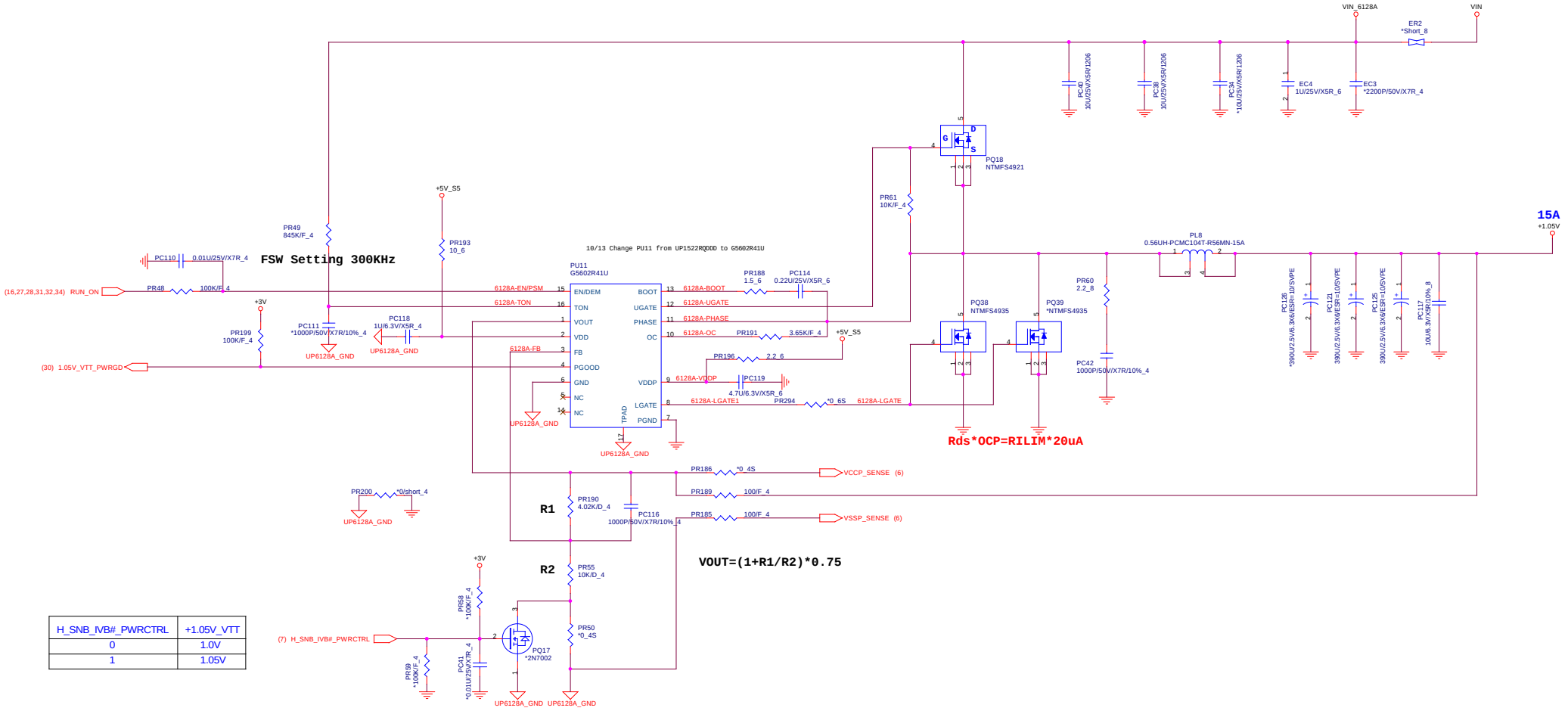

H_SNB_IVB#_PWRCTRL	+1.05V_VTT
0	1.0V
1	1.05V

1.Level 1 Environment-related Substances Should Never be Used.
2.Recycled Resin and Coated Wire should be procured from Green Partners.

Quanta Computer Inc.
PROJECT : Huron River

Size	Document Number	Rev
	+1.05V (UP1522RQDD)-15A	1A

Date: Tuesday, April 05, 2011 Sheet 29 of 39

+0.85V

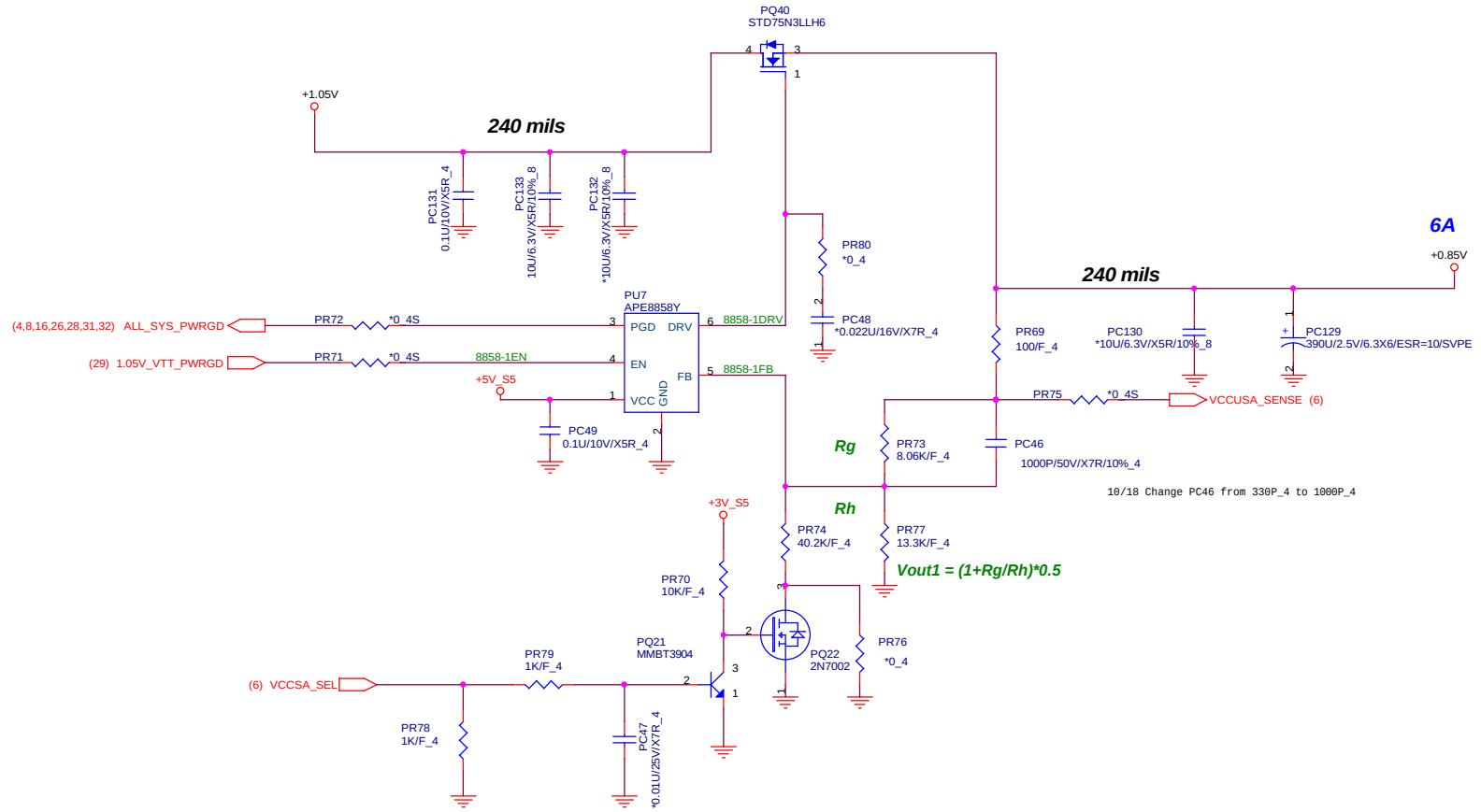

VID 0	VCCSA_SEL	+0.85V
0	0	0.9V
0	1	0.8V
1	0	0.75V
1	1	0.65V

1.Level 1 Environment-related Substances Should Never be Used.
2.Recycled Resin and Coated Wire should be procured from Green Partners.

Quanta Computer Inc.
PROJECT : Huron River

Size	Document Number	Rev
	+0.85V(OZ8116LN)	1A
Date: Tuesday, April 05, 2011	Sheet 30 of 39	

VGA_CORE /16.2A

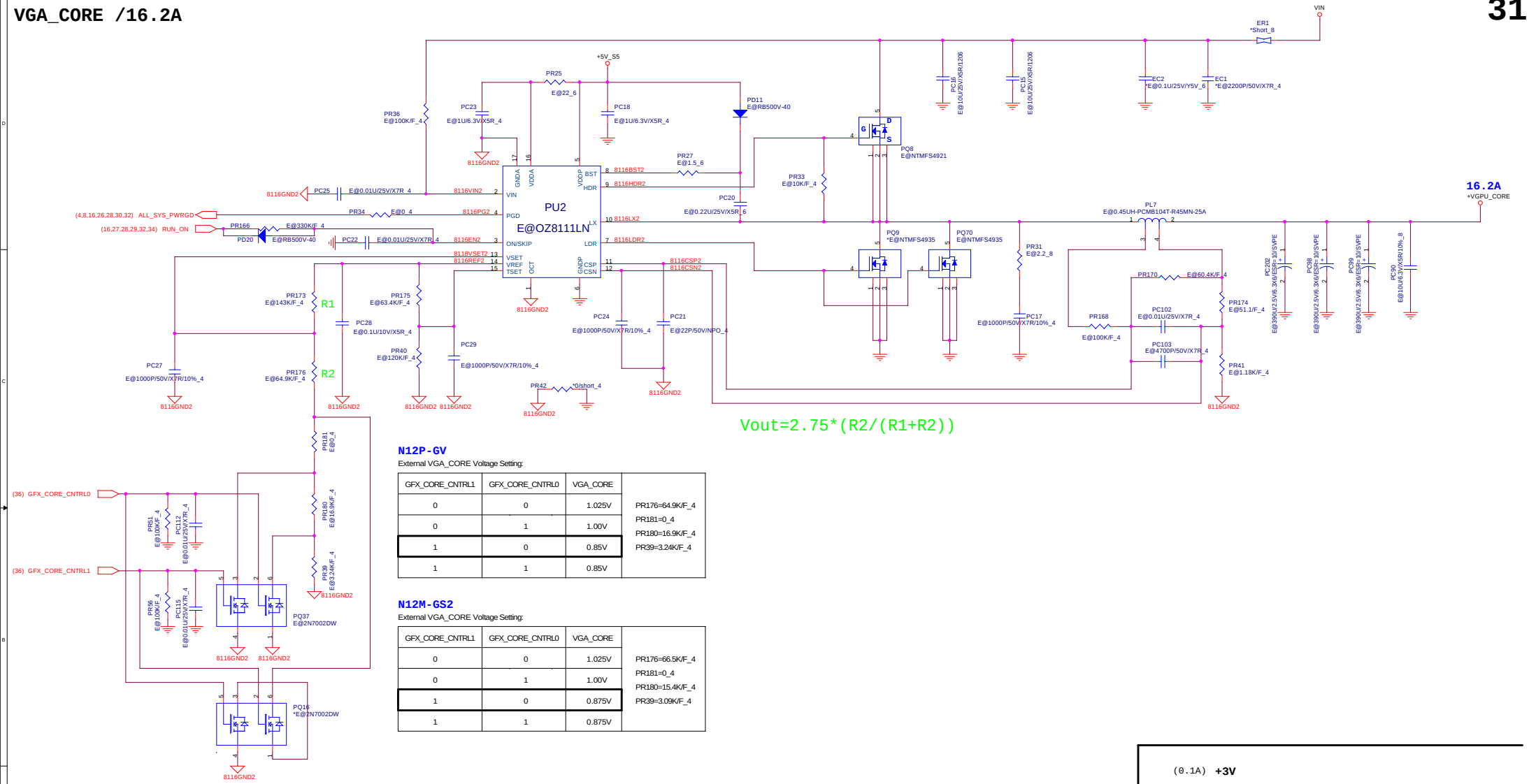

Vout=2.75*(R2/(R1+R2))

N12P-GV

External VGA_CORE Voltage Setting:

GFX_CORE_CNTRL1	GFX_CORE_CNTRL0	VGA_CORE	
0	0	1.025V	PR176=64.9K/F_4
0	1	1.00V	PR181=0_4
1	0	0.85V	PR180=16.9K/F_4
1	1	0.85V	PR39=3.24K/F_4

N12M-GS2

External VGA_CORE Voltage Setting:

GFX_CORE_CNTRL1	GFX_CORE_CNTRL0	VGA_CORE	
0	0	1.025V	PR176=66.5K/F_4
0	1	1.00V	PR181=0_4
1	0	0.875V	PR180=15.4K/F_4
1	1	0.875V	PR39=3.09K/F_4

Dis-charge

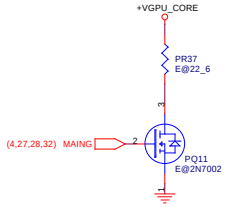

UMA_GFX_DISABLE

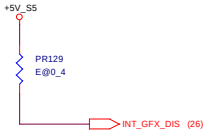

(0.1A) **+3V**

(2A) **+1.05V**

(6A) **+1.5V**

1.Level 1 Environment-related Substances Should Never be Used.
2.Recycled Resin and Coated Wire should be procured from Green Partners.

Quanta Computer Inc.
PROJECT : Huron River

Size	Document Number	Rev
	VGA_CORE(OZ8111)-15A	1A

Date: Tuesday, April 05, 2011 Sheet 31 of 39

VCC1.8

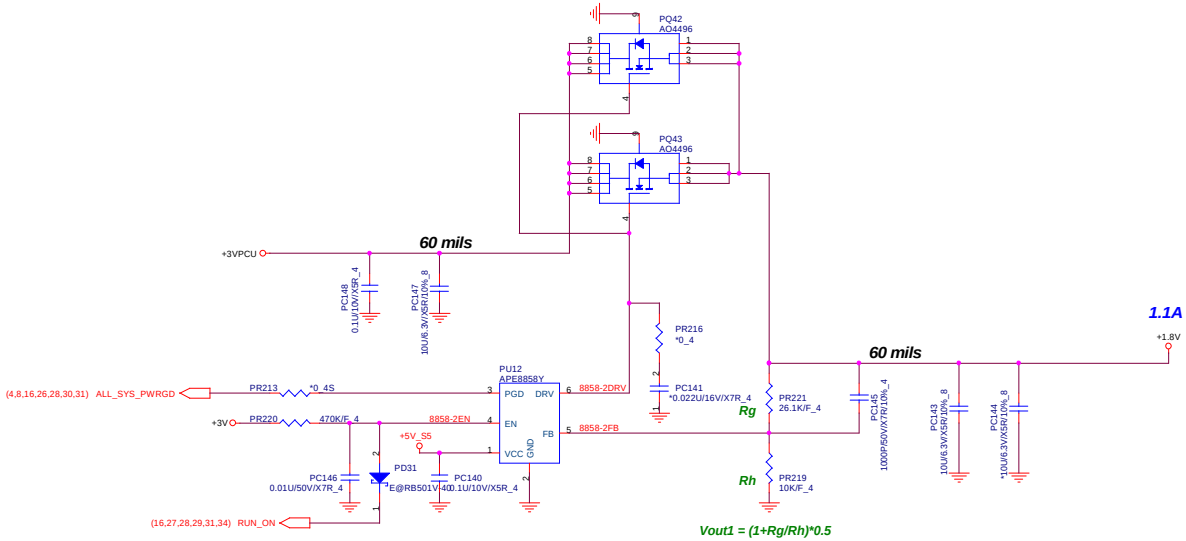

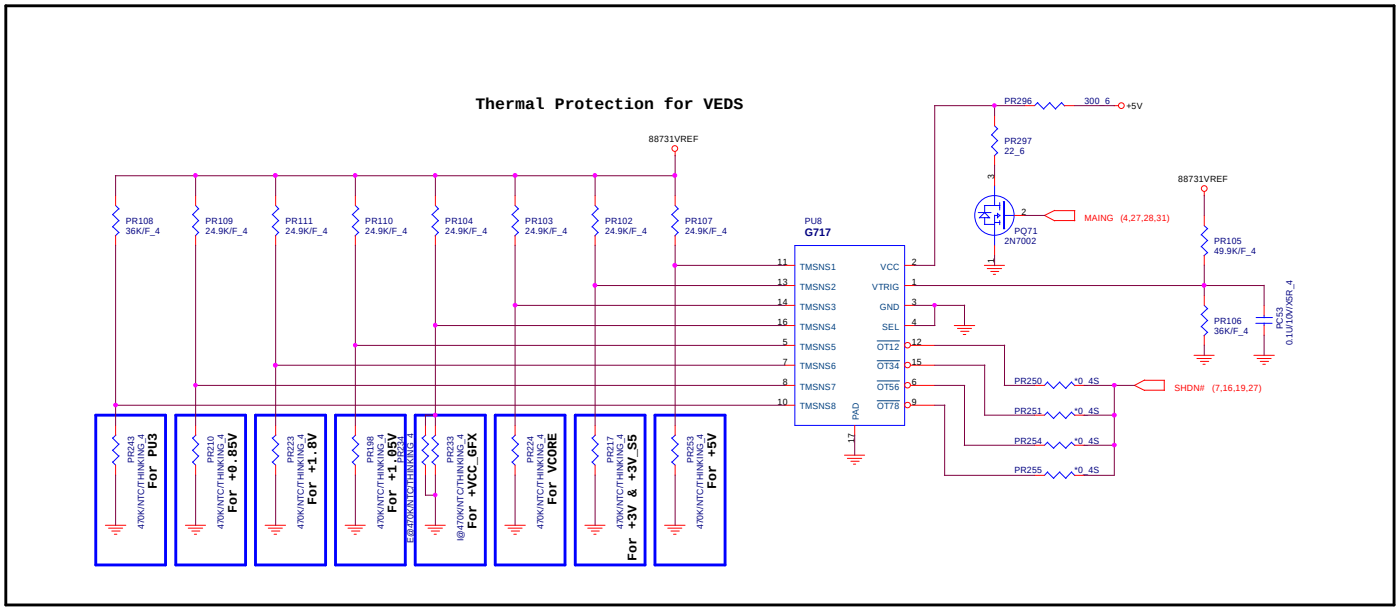

1.Level 1 Environment-related Substances Should Never be Used.
2.Recycled Resin and Coated Wire should be procured from Green Partners.

Quanta Computer Inc.
PROJECT : Huron River

Size	Document Number	Rev
	VCC1.8	1A
Date: Tuesday, April 05, 2011	Sheet 32 of 39	

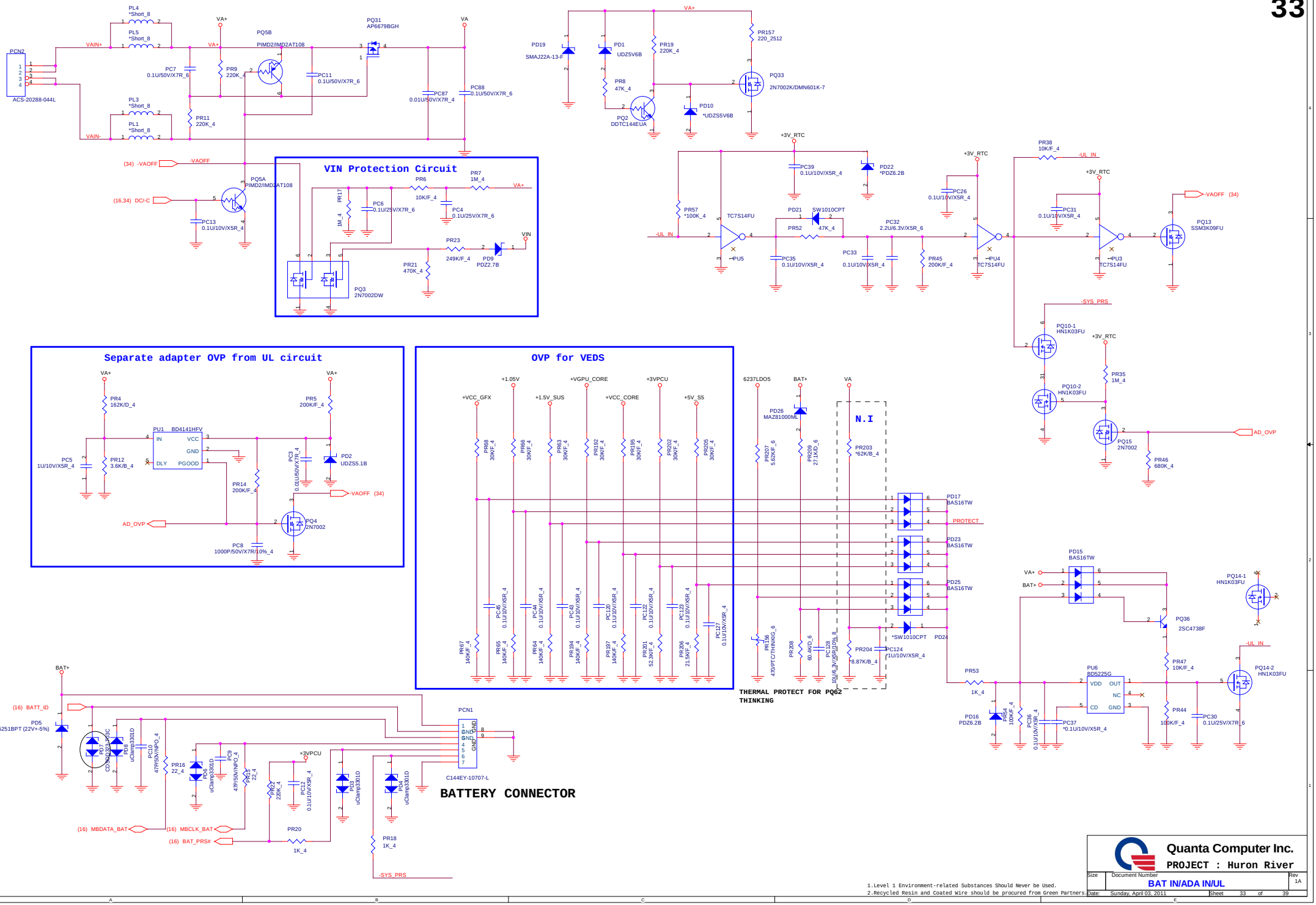

Quanta Computer Inc.			
PROJECT : Huron River			
Size	Document Number		Rev
	BAT IN/ADA IN/UL		1A
Date: Sunday, April 03, 2011		Sheet 33 of 39	

1.Level 1 Environment-related Substances Should Never be Used.
2.Recycled Resin and Coated Wire should be procured from Green Partners.

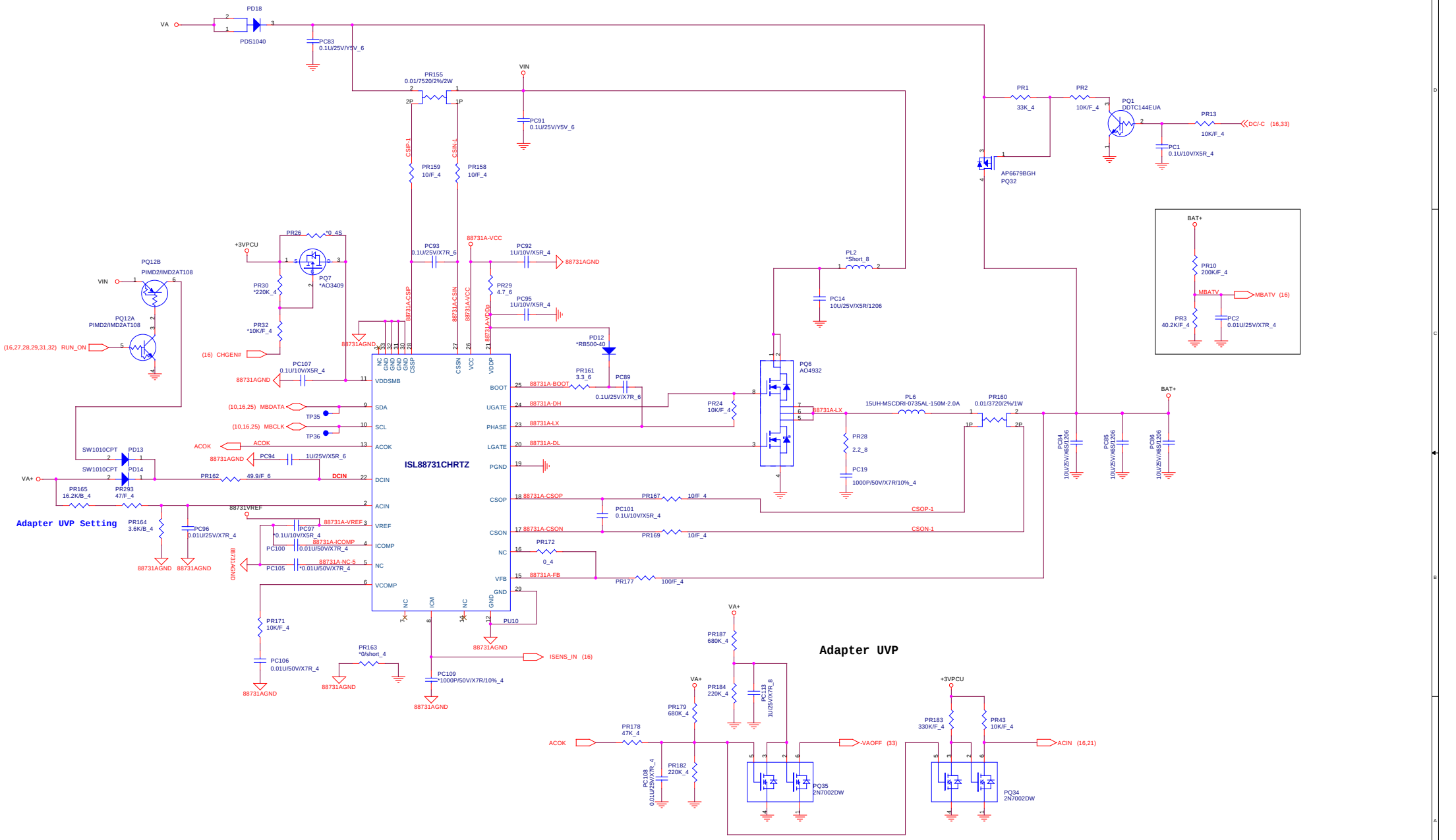

1.Level 1 Environment-related Substances Should Never be Used.
2.Recycled Resin and Coated Wire should be procured from Green Partners.

Quanta Computer Inc.
PROJECT : Huron River

Size	Document Number	Rev
	CHARGER(ISL88731A)	1A
Date: Tuesday, April 05, 2011	Sheet 34 of 39	

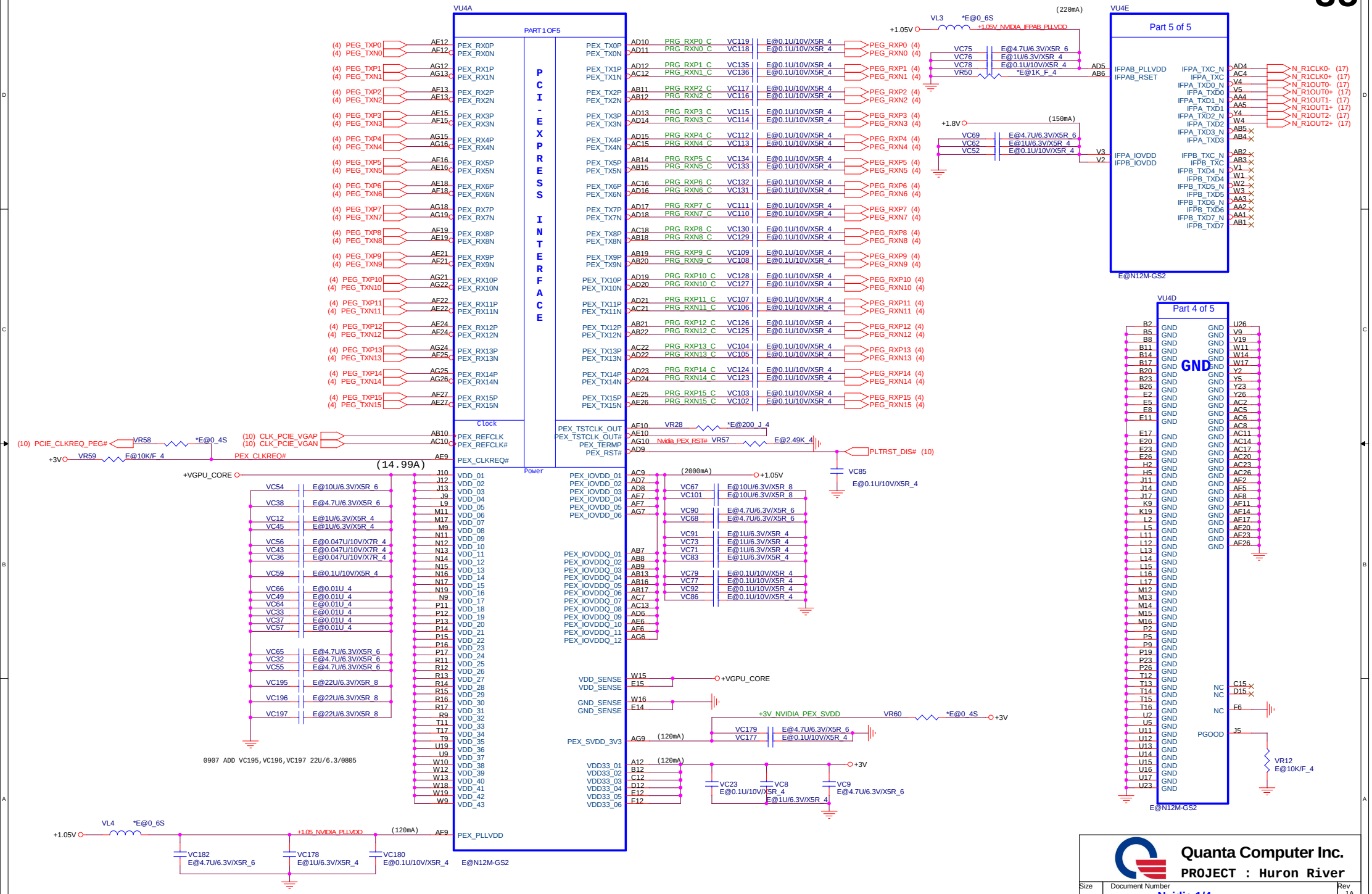
VU4A
PART 1 OF 5
PCI-EXPRESS INTERFACE
PEX_RX0P
PEX_RX0N
PEX_RX1P
PEX_RX1N
PEX_RX2P
PEX_RX2N
PEX_RX3P
PEX_RX3N
PEX_RX4P
PEX_RX4N
PEX_RX5P
PEX_RX5N
PEX_RX6P
PEX_RX6N
PEX_RX7P
PEX_RX7N
PEX_RX8P
PEX_RX8N
PEX_RX9P
PEX_RX9N
PEX_RX10P
PEX_RX10N
PEX_RX11P
PEX_RX11N
PEX_RX12P
PEX_RX12N
PEX_RX13P
PEX_RX13N
PEX_RX14P
PEX_RX14N
PEX_RX15P
PEX_RX15N
Clock
PEX_REFCLK
PEX_REFCLK#
PEX_CLKREQ#
Power
PEX_TX0P
PEX_TX0N
PEX_TX1P
PEX_TX1N
PEX_TX2P
PEX_TX2N
PEX_TX3P
PEX_TX3N
PEX_TX4P
PEX_TX4N
PEX_TX5P
PEX_TX5N
PEX_TX6P
PEX_TX6N
PEX_TX7P
PEX_TX7N
PEX_TX8P
PEX_TX8N
PEX_TX9P
PEX_TX9N
PEX_TX10P
PEX_TX10N
PEX_TX11P
PEX_TX11N
PEX_TX12P
PEX_TX12N
PEX_TX13P
PEX_TX13N
PEX_TX14P
PEX_TX14N
PEX_TX15P
PEX_TX15N
PEX_TSTCLK_OUT
PEX_TSTCLK_OUT#
PEX_TERMP
PEX_RST#
PEX_PLLVDD
E@N12M-GS2
VU4E
Part 5 of 5
IFPAB_PLLVDD
IFPAB_RSET
IFPA_IOVDD
IFPB_IOVDD
IFPA_TXC_N
IFPA_TXC
IFPA_TXD0_N
IFPA_TXD0
IFPA_TXD1_N
IFPA_TXD1
IFPA_TXD2_N
IFPA_TXD2
IFPA_TXD3_N
IFPA_TXD3
IFPB_TXC_N
IFPB_TXC
IFPB_TXD4_N
IFPB_TXD4
IFPB_TXD5_N
IFPB_TXD5
IFPB_TXD6_N
IFPB_TXD6
IFPB_TXD7_N
IFPB_TXD7
E@N12M-GS2
VU4D
Part 4 of 5
GND
E@N12M-GS2
VDD_01
VDD_02
VDD_03
VDD_04
VDD_05
VDD_06
VDD_07
VDD_08
VDD_09
VDD_10
VDD_11
VDD_12
VDD_13
VDD_14
VDD_15
VDD_16
VDD_17
VDD_18
VDD_19
VDD_20
VDD_21
VDD_22
VDD_23
VDD_24
VDD_25
VDD_26
VDD_27
VDD_28
VDD_29
VDD_30
VDD_31
VDD_32
VDD_33
VDD_34
VDD_35
VDD_36
VDD_37
VDD_38
VDD_39
VDD_40
VDD_41
VDD_42
VDD_43
PEX_IOVDD_01
PEX_IOVDD_02
PEX_IOVDD_03
PEX_IOVDD_04
PEX_IOVDD_05
PEX_IOVDD_06
PEX_IOVDDQ_01
PEX_IOVDDQ_02
PEX_IOVDDQ_03
PEX_IOVDDQ_04
PEX_IOVDDQ_05
PEX_IOVDDQ_06
PEX_IOVDDQ_07
PEX_IOVDDQ_08
PEX_IOVDDQ_09
PEX_IOVDDQ_10
PEX_IOVDDQ_11
PEX_IOVDDQ_12
PEX_SVDD_3V3
VDD33_01
VDD33_02
VDD33_03
VDD33_04
VDD33_05
VDD33_06
VDD_SENSE
GND_SENSE
NC
PGOOD
+VGPU_CORE
+1.05V
+1.8V
+3V
+3V_NVIDIA_PEX_SVDD
+1.05V_NVIDIA_PLLVDD
PCIE_CLKREQ_PEG#
CLK_PCIE_VGAP
CLK_PCIE_VGAN
PLTRST_DIS#
Nvidia_PEX_RST#
0907 ADD VC195,VC196,VC197 22U/6.3/0805
1.Level 1 Environment-related Substances Should Never be Used.
2.Recycled Resin and Coated Wire should be procured from Green Partners.

N12P-GV

External VGA_CORE Voltage Setting:

GFX_CORE_CNTRL1	GFX_CORE_CNTRL0	VGA_CORE	
0	0	1.025V	PR176=64.9K/F_4
0	1	1.00V	PR181=0_4
1	0	0.85V	PR180=16.9K/F_4
1	1	0.85V	PR39=3.24K/F_4

N12M-GS2

External VGA_CORE Voltage Setting:

GFX_CORE_CNTRL1	GFX_CORE_CNTRL0	VGA_CORE	
0	0	1.025V	PR176=66.5K/F_4
0	1	1.00V	PR181=0_4
1	0	0.875V	PR180=15.4K/F_4
1	1	0.875V	PR39=3.09K/F_4

Logical Strap Bit Mapping

Resister Value	Pull to VDD	Pull to GND
5K	1000	0000
10K	1001	0001
15K	1010	0010
20K	1011	0011
25K	1100	0100
30K	1101	0101
35K	1110	0110
45K	1111	0111

N12M Strap Bit Define

Straps	Bit 3	Bit 2	Bit 1	Bit 0
ROM_SO	FB[1]	FB[1]	SMB_ALT_ADDR	VGA_DEVICE
ROM_SCLK	PCI_DEVID[4]	SUB_VENDOR	PCI_DEVID[5]	PEX_PLL_EN_TERM
ROM_SI	RAMCFG[3]	RAMCFG[2]	RAMCFG[1]	RAMCFG[0]
STRAP2	PCI_DEVID[3]	PCI_DEVID[2]	PCI_DEVID[1]	PCI_DEVID[0]
STRAP1	3GIO_PADCFG [3]	3GIO_PADCFG [2]	3GIO_PADCFG [1]	3GIO_PADCFG [0]
STRAP0	USER[3]	USER[2]	USER[1]	USER[0]
STRAP3	SOR3_EXPOSED	SOR2_EXPOSED	SOR1_EXPOSED	SOR0_EXPOSED
STRAP4	RESERVED	RESERVED	PCIE_MAX_SPEED	DP_PLL_VDD33

for device ID

For N12P VR3 pull high 4.99K VR65 NC VR36 Pull down 4.99K

For N12M VR3 pull high 4.99K VR65 NC VR36 Pull down 30K

	VRAM Capacity	VRAM Vender	ID	VR35	P/N	P/N
N12M	64Mx16 DDR3	Hynix	0010	PD15K	H5TQ1G63DFR-12C	
		Samsung	0011	PD20K	K4W1G1646G-BC12	
	128Mx16 DDR3	Hynix	0110	PD35K	H5TQ2G63BFR-12C	
		Samsung	0111	PD45K	K4W2G1646C-HC12	

1/18 Change VC5,VC6 from 18P to 27P.

1/18 Change N12M and N12P device ID

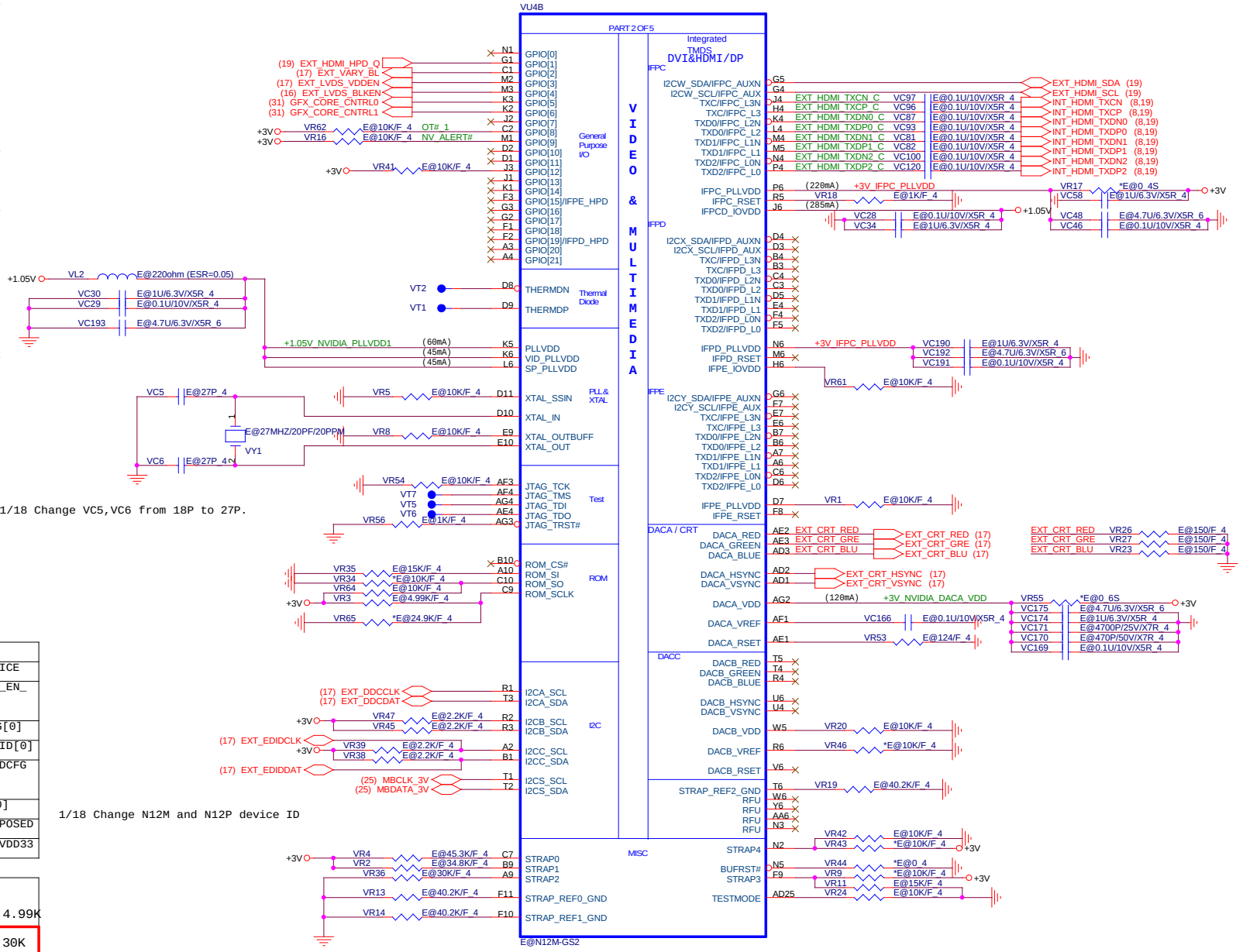

1.Level 1 Environment-related Substances Should Never be Used.
2.Recycled Resin and Coated Wire should be procured from Green Partners.

Quanta Computer Inc.
PROJECT : Huron River

Size	Document Number	Rev
	Nvidia 2/4	2A

Date: Tuesday, April 05, 2011 Sheet 36 of 39

Down Side VRAM TOP/BOT

TOP

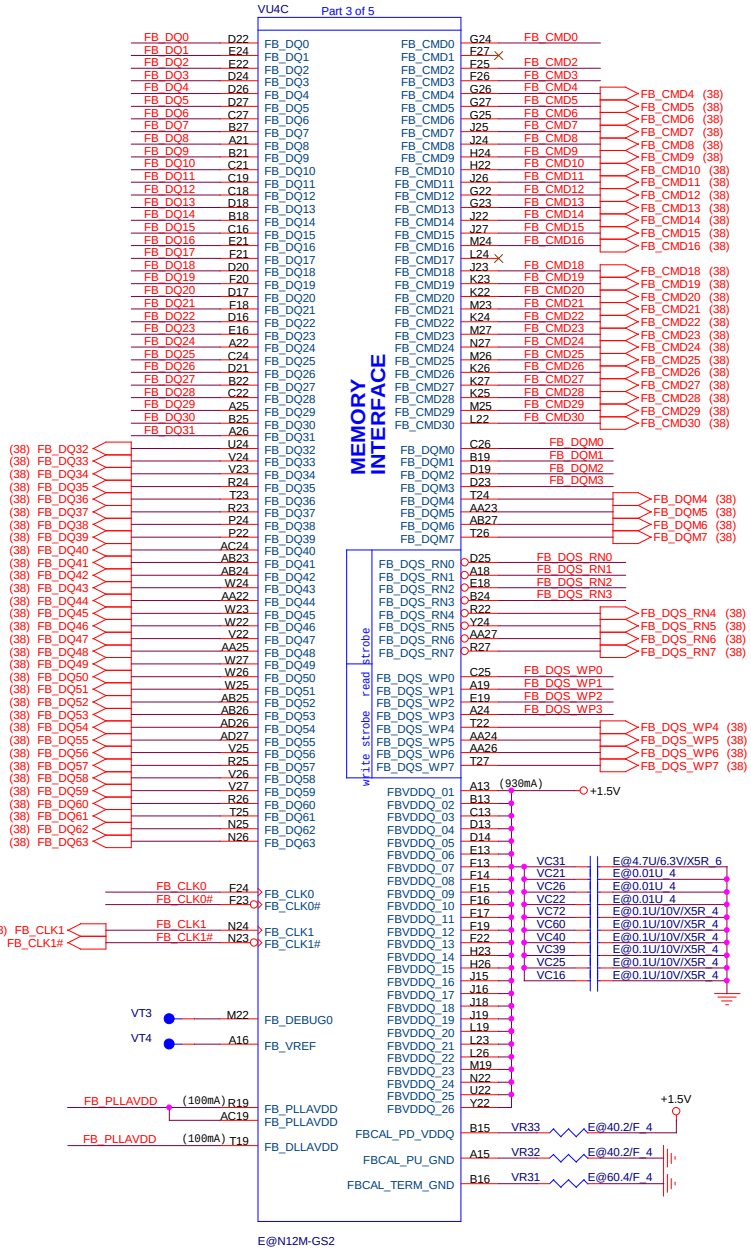

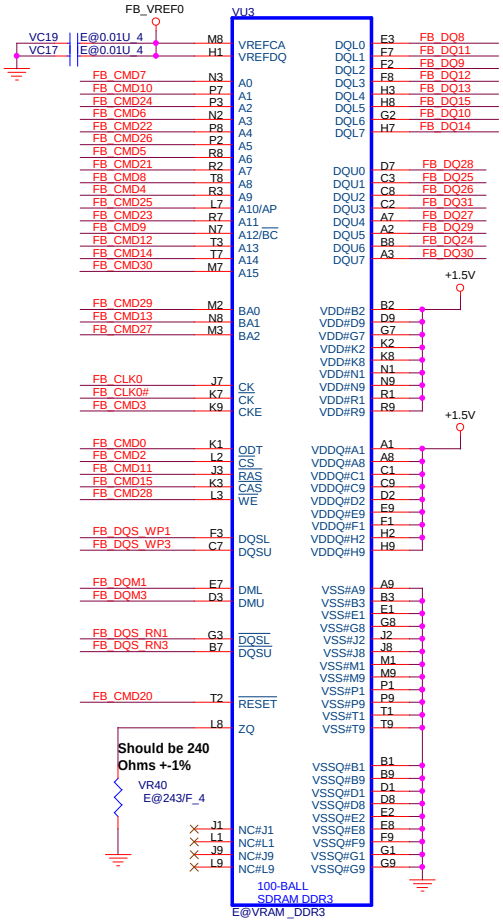

BOT

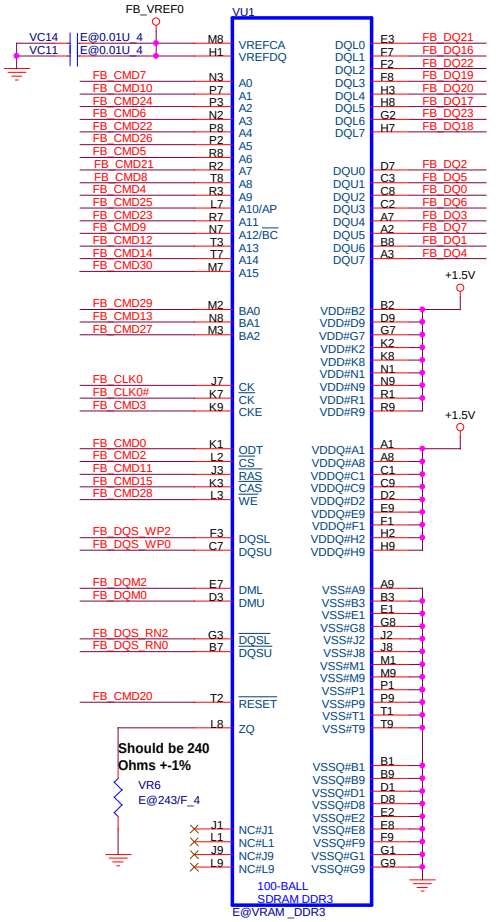

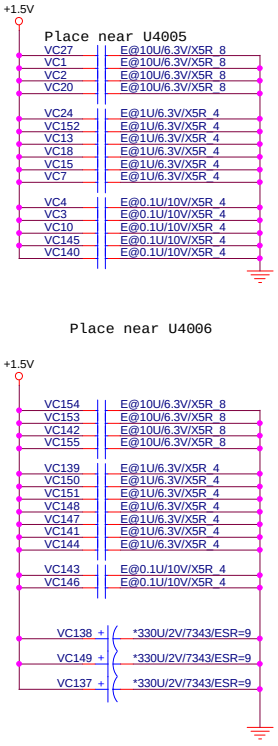

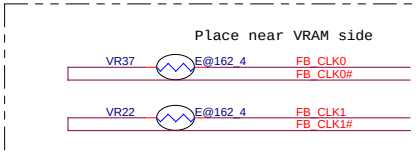

need find Bead 30 ohm@100Mhz ESR=0.01

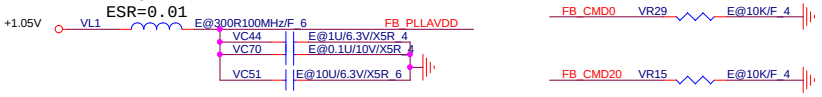

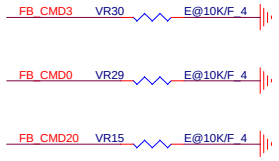

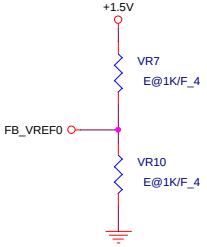

1.Level 1 Environment-related Substances Should Never be Used.
2.Recycled Resin and Coated Wire should be procured from Green Partners.

Quanta Computer Inc.
PROJECT : Huron River

Size	Document Number	Rev
	VRAM 3/4	2A

Date: Monday, February 21, 2011 Sheet 37 of 39

Up Side VRAM TOP/BOT

TOP

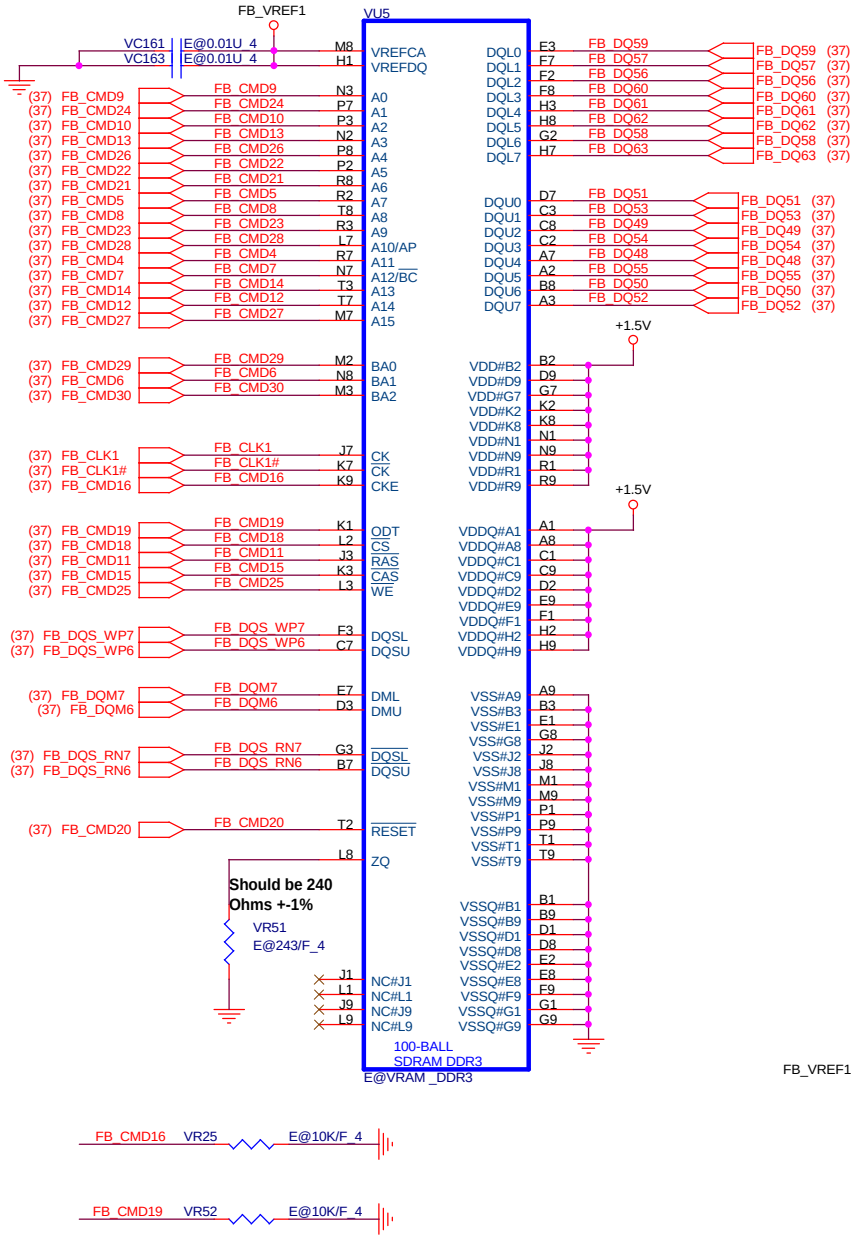

BOT

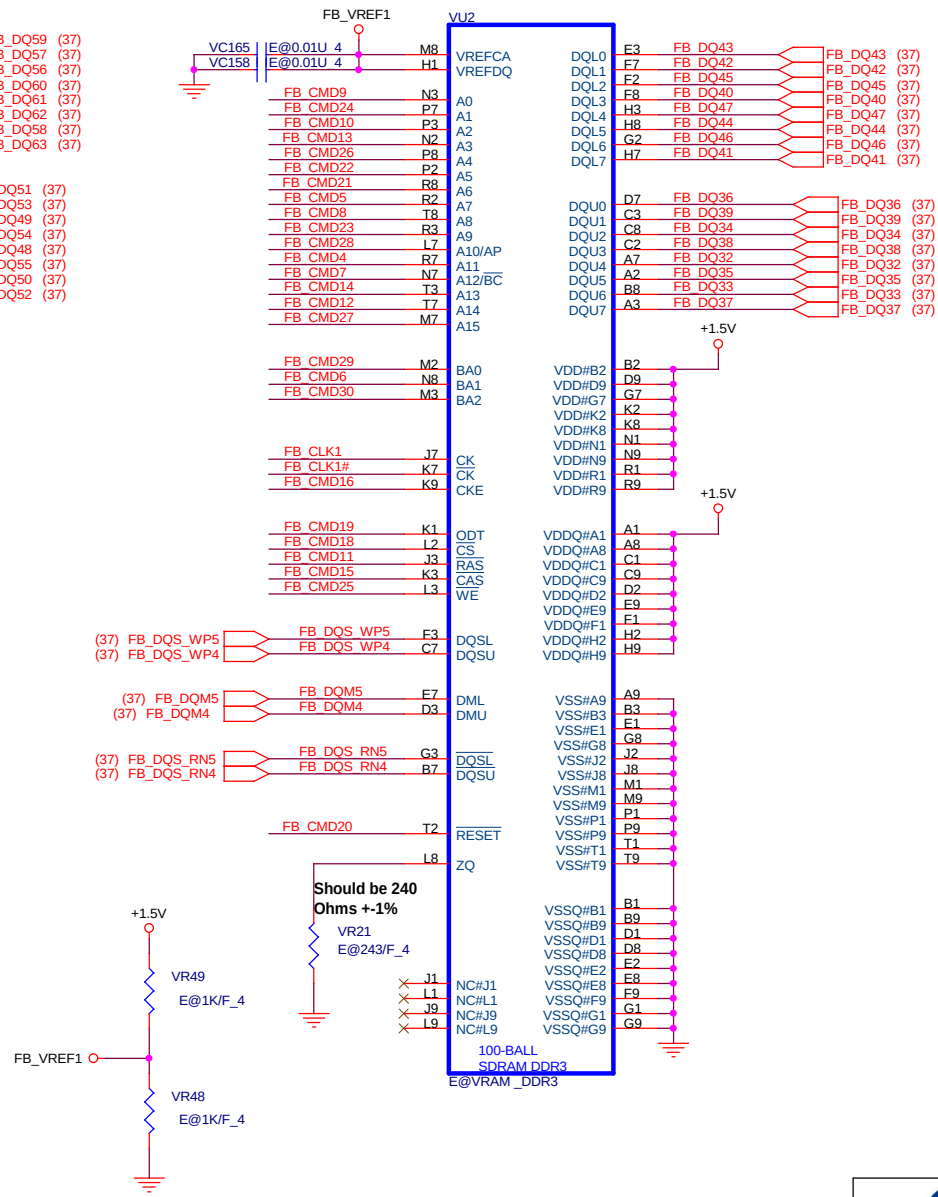

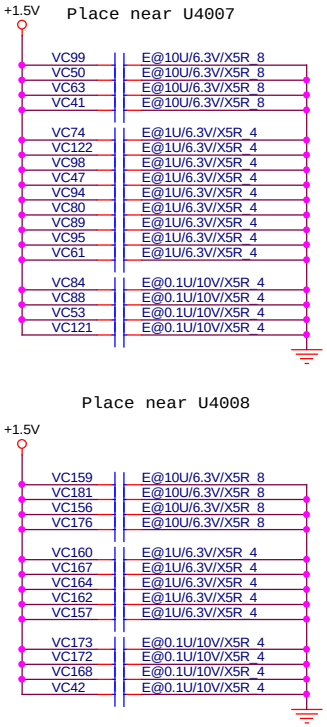

1.Level 1 Environment-related Substances Should Never be Used.
2.Recycled Resin and Coated Wire should be procured from Green Partners.

Quanta Computer Inc.
PROJECT : Huron River

Size	Document Number	Rev
	VRAM 4/4	1A
Date: Monday, February 21, 2011	Sheet 38 of 39	

USB PORT Architecture for EVT	
PORT 0	IO Port
PORT 1	IO Port
PORT 2	IO Port
PORT 3	N/A
PORT 4	IO Port
PORT 5	N/A
PORT 6	N/A
PORT 7	N/A
PORT 8	N/A
PORT 9	Camera
PORT 10	N/A
PORT 11	N/A
PORT 12	WiMax
PORT 13	BlueTooth

PCIE BUS	
PORT 1	WLAN Port
PORT 2	N/A
PORT 3	N/A
PORT 4	CARD READER
PORT 5	N/A
PORT 6	GLAN(RTL8111E)
PORT 7	N/A
PORT 8	N/A

SM BUS	MBCLK/MBDATA
ISL88731CHRTZ	0001 001X
NVIDIA	1001 111X

SATA BUS	
PORT 0	HDD
PORT 1	N/A
PORT 2	N/A
PORT 3	ODD
PORT 4	N/A

Board ID0 (N12M/N12P)	N12M	N12P
R294	Stuff	No Stuff
R297	No Stuff	Stuff

Board ID1 (VRAM Vendor)	Samaung	Hynix
R47	Stuff	No Stuff
R48	No Stuff	Stuff

Board ID2 (VRAM 1G/512M)	1G	512M
R39	Stuff	No Stuff
R27	No Stuff	Stuff

	DGPU_PRSNT#(GPIO39)	BOARD_ID0 (GPIO16)	BOARD_ID1(GPIO6)	BOARD_ID2(GPIO17)
UMA	0	0	0	0
N12M-GS2_SAM_512MB	1	1	1	0
N12M-GS2-SAM_1GB	1	1	1	1
N12M-GS2-HYN_512MB	1	1	0	0
N12M-GS2-HYN_1GB	1	1	0	1
N12P-GV_SAM_512MB	1	0	1	0
N12P-GV-SAM_1GB	1	0	1	1
N12P-GV-HYN_512MB	1	0	0	0
N12P-GV-HYN1_1GB	1	0	0	1

www.s-manuals.com