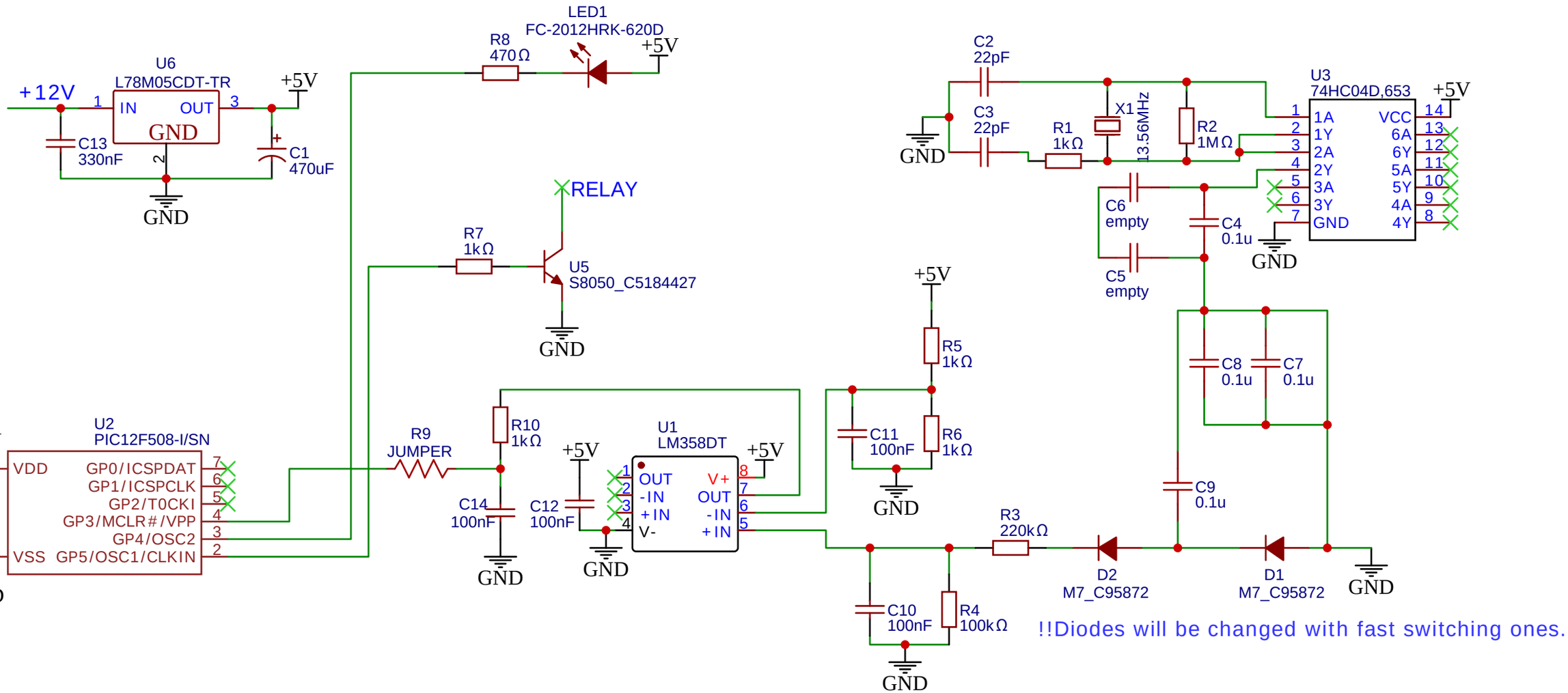

TITLE: Sheet_1	REV: 1.0
EasyEDA	Company: Your Company / Sheet: 1/1
	Date: 2024-03-08 / Drawn By: ASCII the Saint