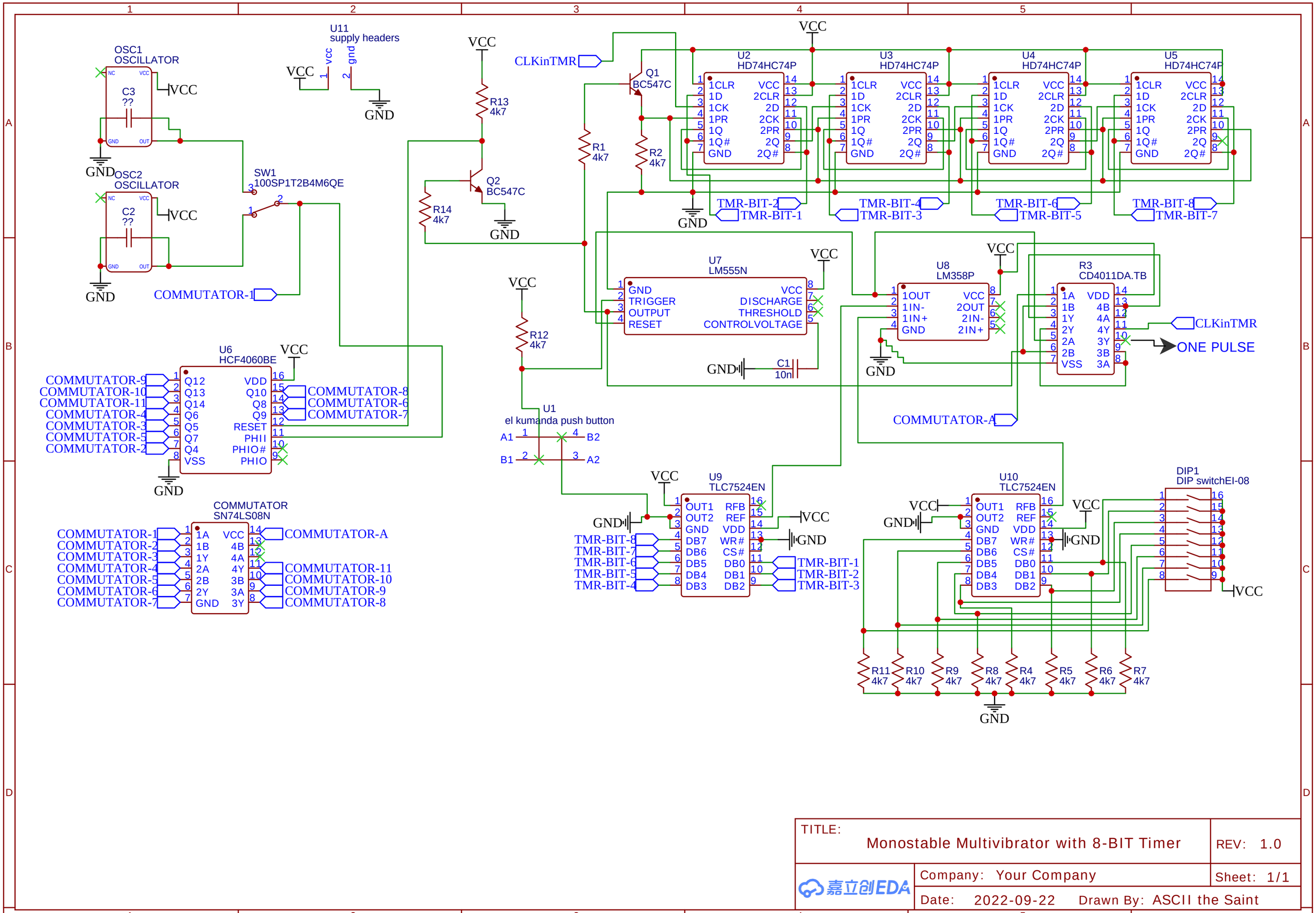

TITLE: Monostable Multivibrator with 8-BIT Timer		REV: 1.0
嘉立创EDA	Company: Your Company	Sheet: 1/1
	Date: 2022-09-22 Drawn By: ASCII the Saint	