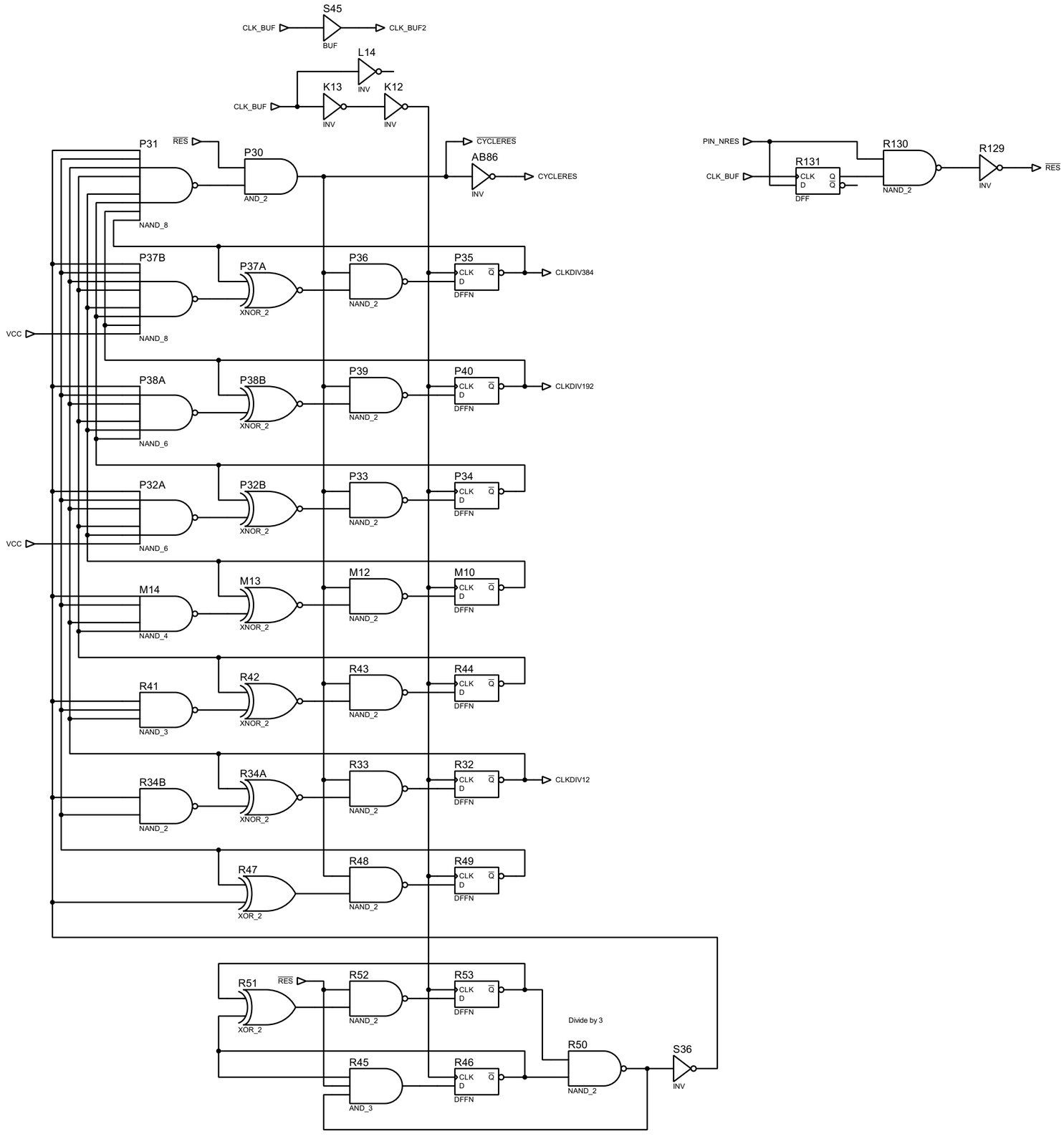

TITLE:	DATE:
Konami 054539 CLOCK DIV LOW	10/26/2025
BY: Sean Gonsalves REV: @REV	PAGE: 1/54

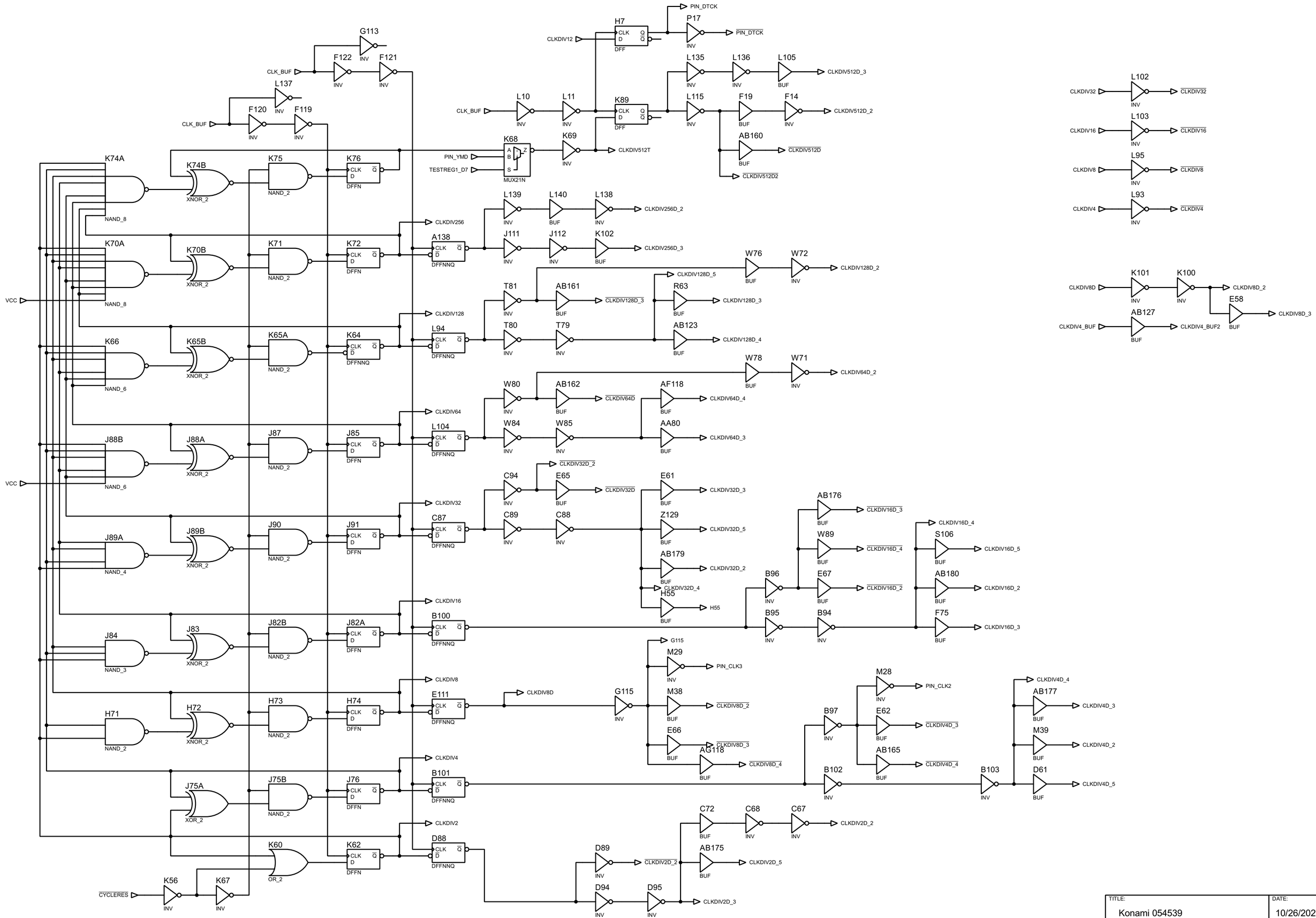

TITLE:	DATE:
Konami 054539 CLOCK DIV HIGH	10/26/2025
BY: Sean Gonsalves REV: @REV	PAGE: 2/54

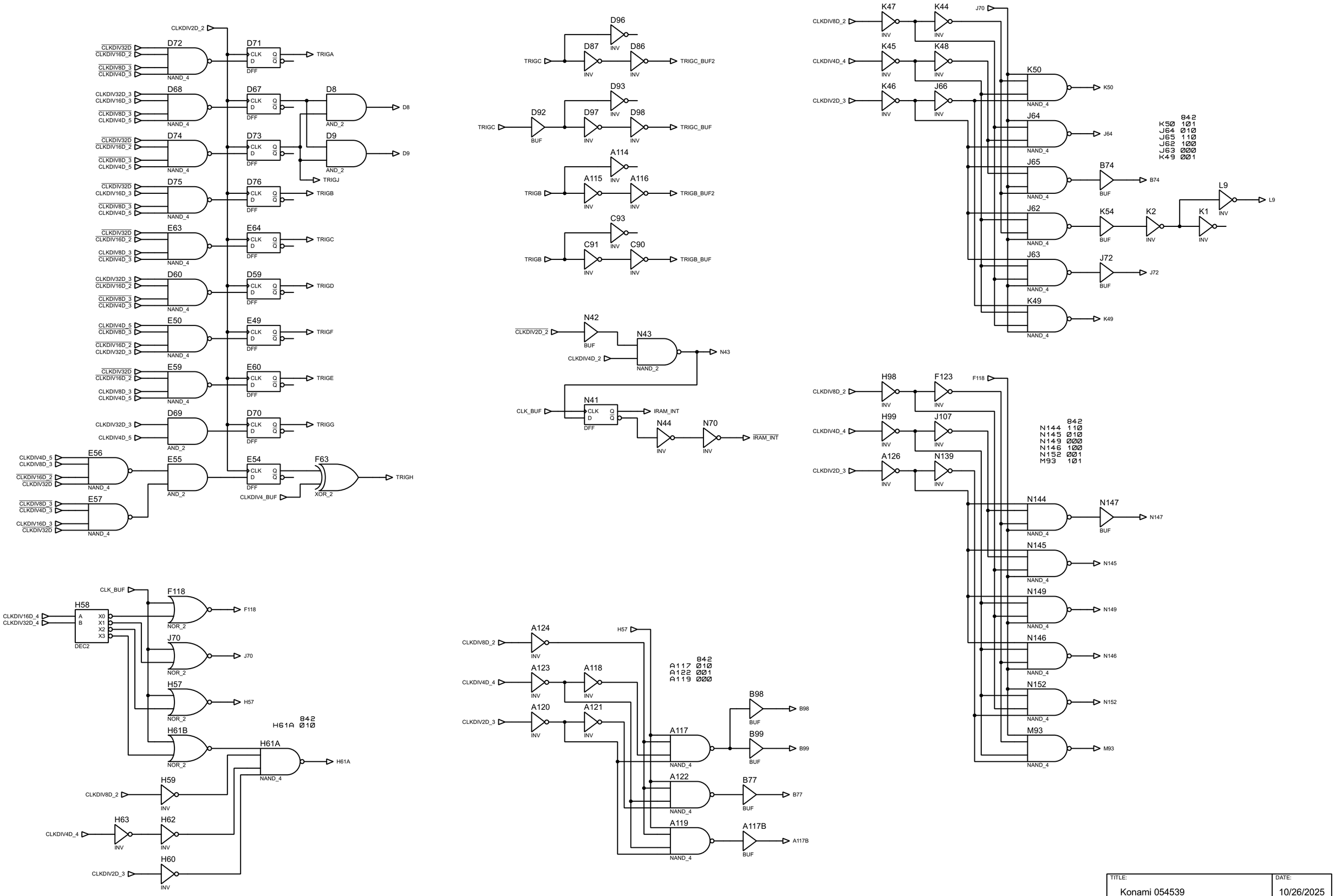

TITLE:	DATE:
Konami 054539 TRIGGERS	10/26/2025
BY: Sean Gonsalves REV: @REV	PAGE: 3/54

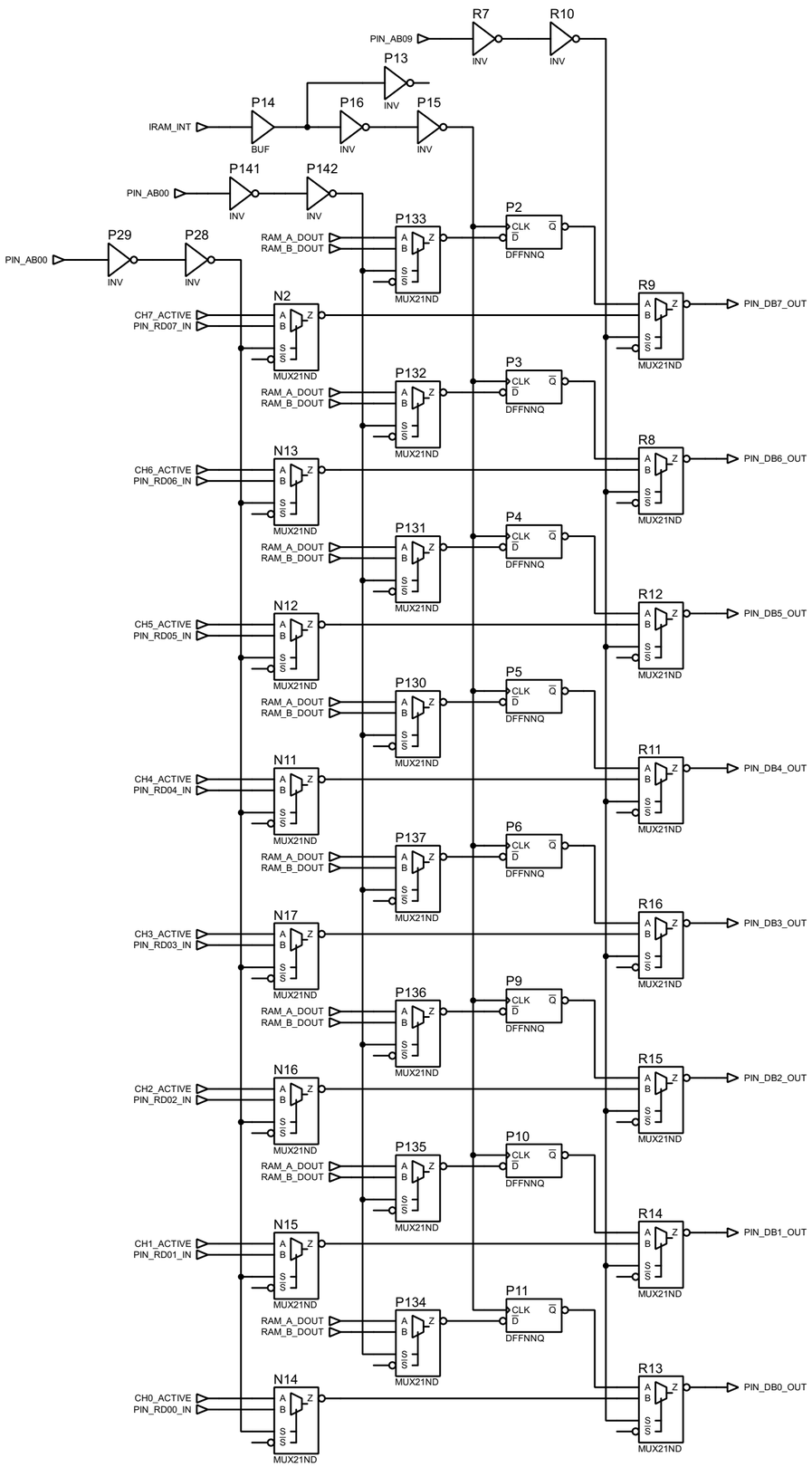

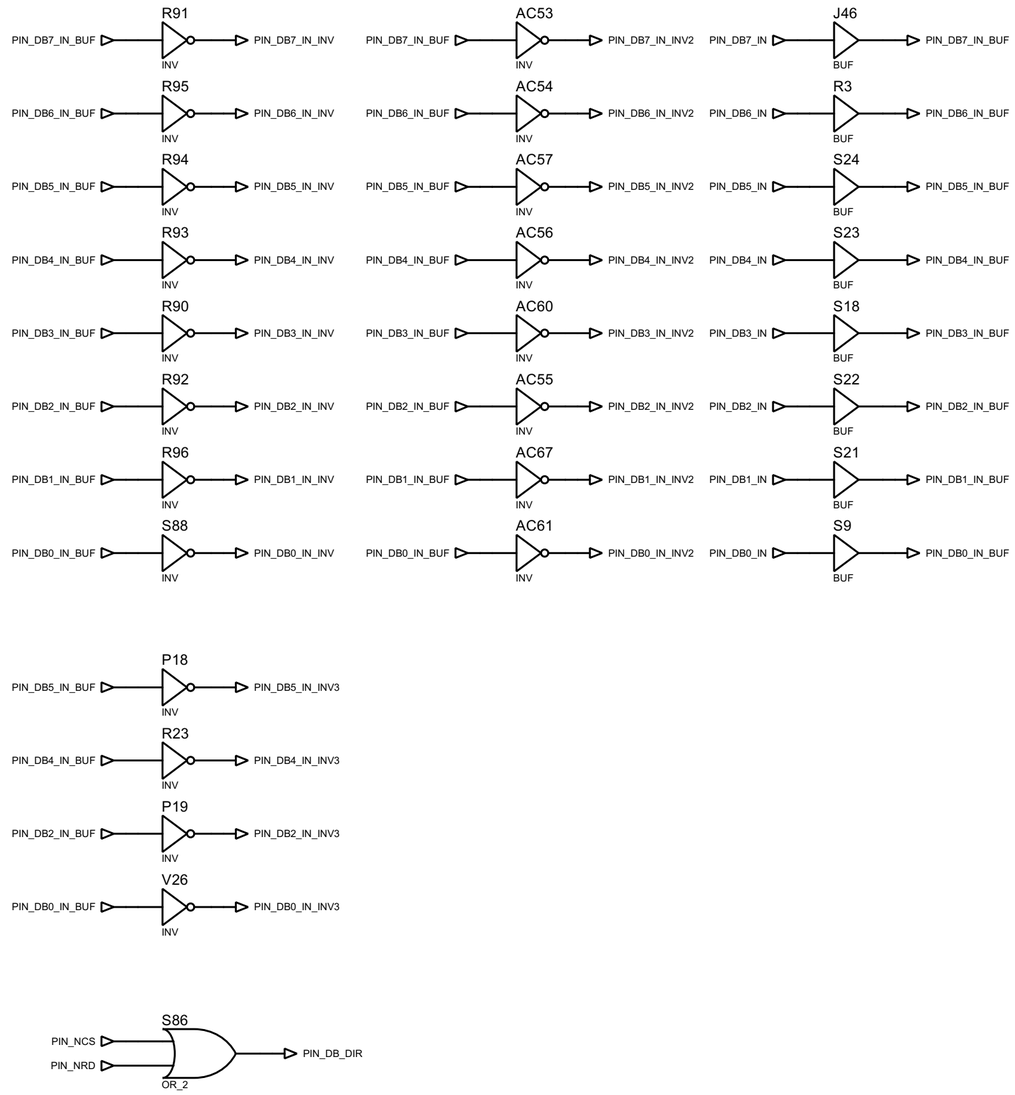

TITLE:	DATE:
Konami 054539 CPU DATA	10/26/2025
BY: Sean Gonsalves REV: @REV	PAGE: 4/54

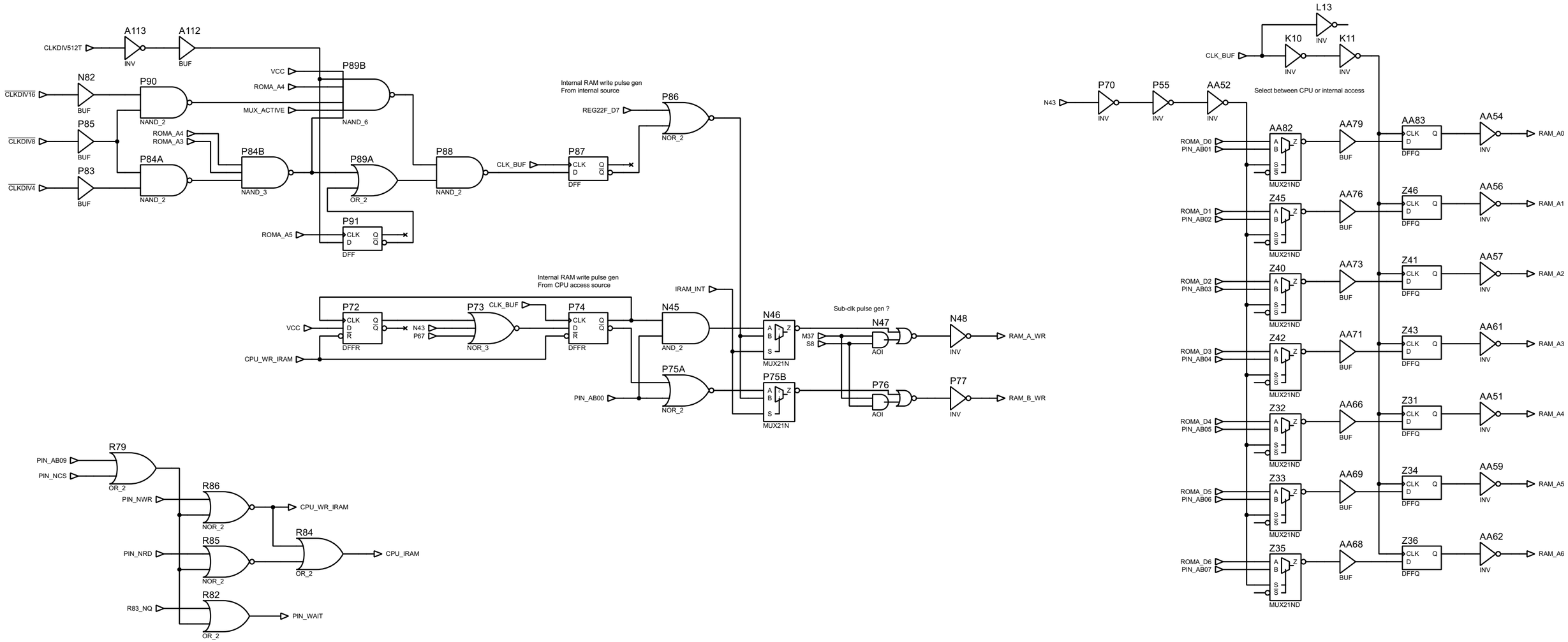

TITLE:	DATE:
Konami 054539 INTERNAL RAM	10/26/2025
BY: Sean Gonsalves REV: @REV	PAGE: 5/54

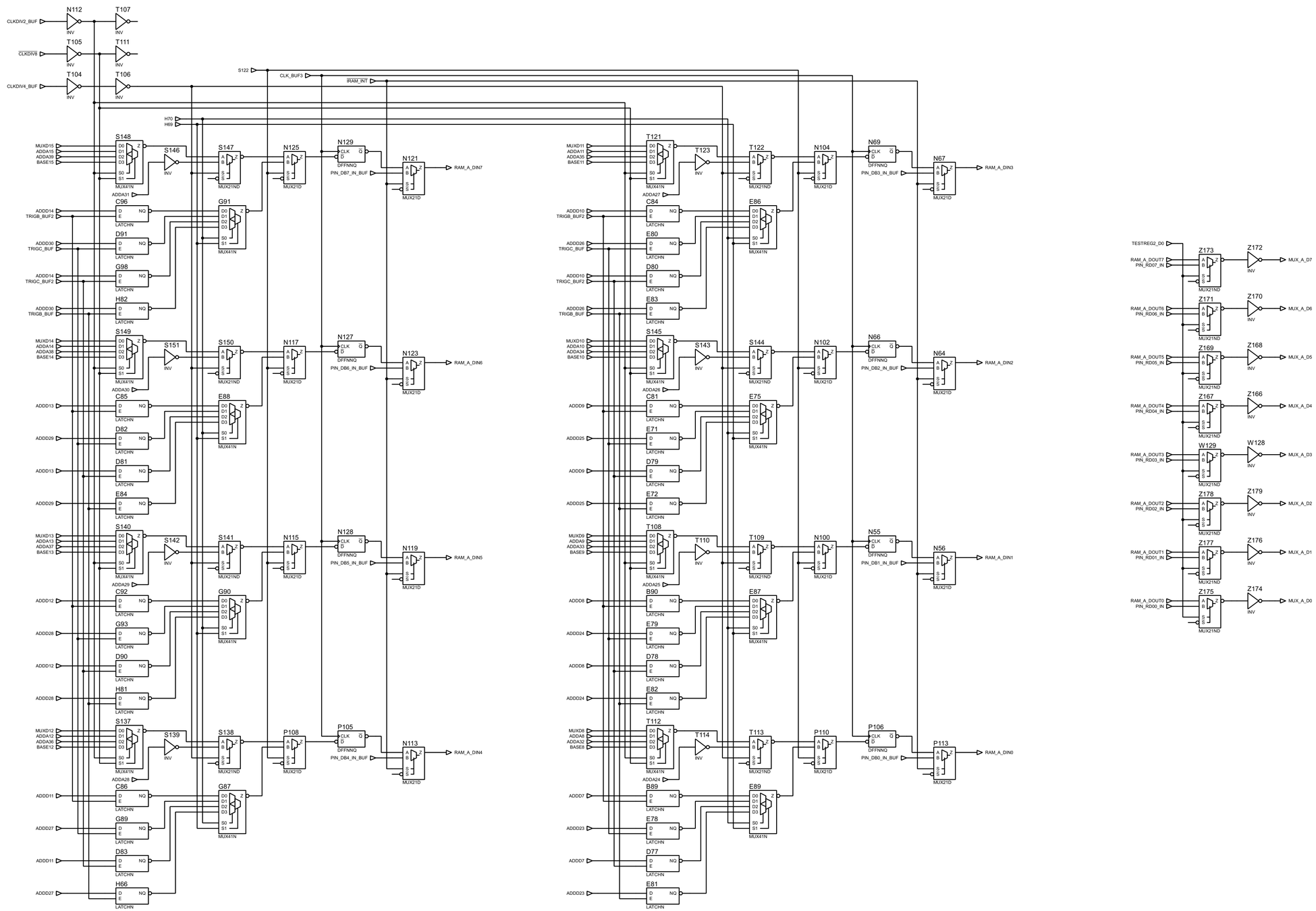

TITLE:	DATE:
Konami 054539 RAM A DATA	10/26/2025
BY: Sean Gonsalves REV: @REV	PAGE: 6/54

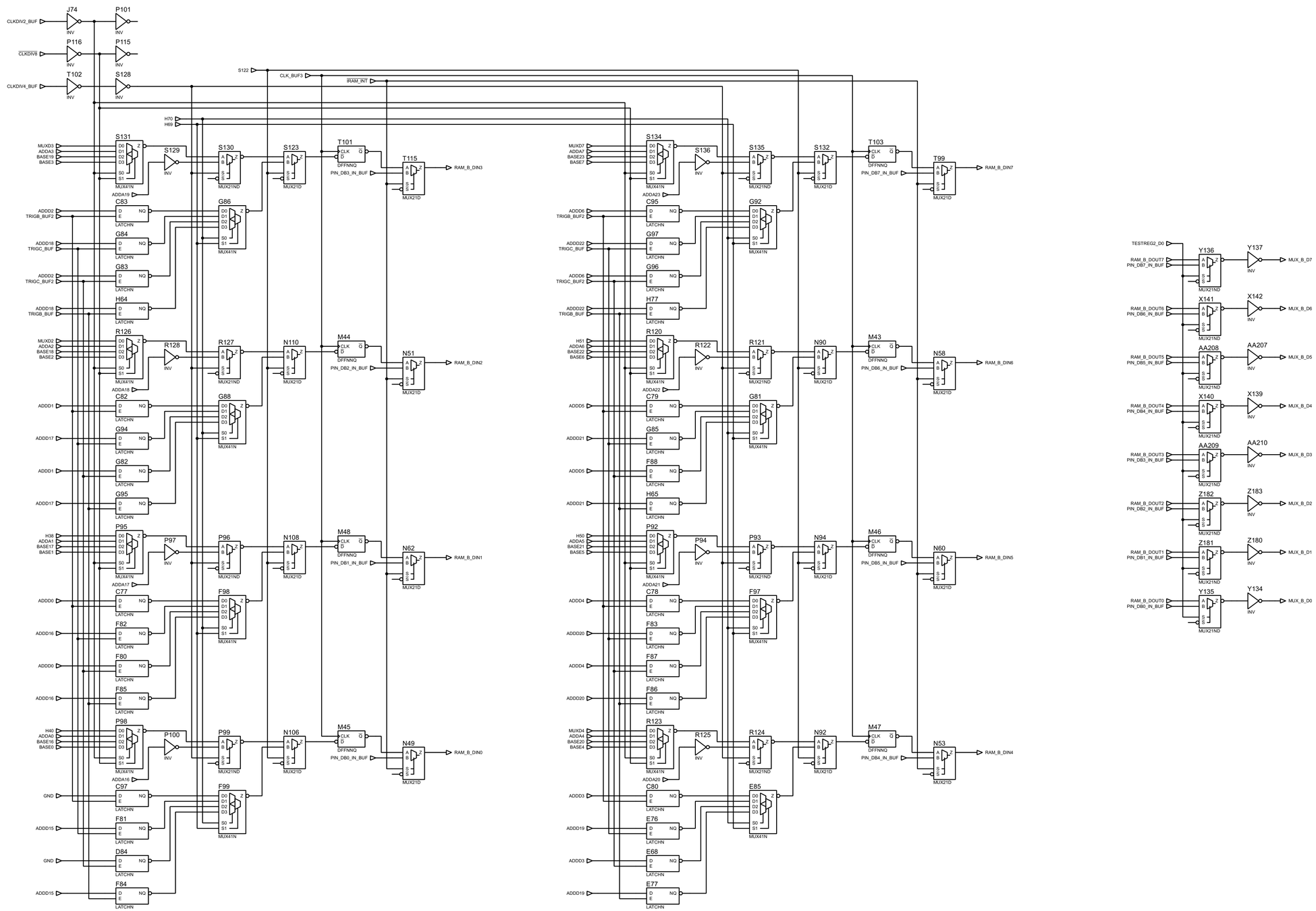

TITLE:	DATE:
Konami 054539 RAM B DATA	10/26/2025
BY: Sean Gonsalves REV: @REV	PAGE: 7/54

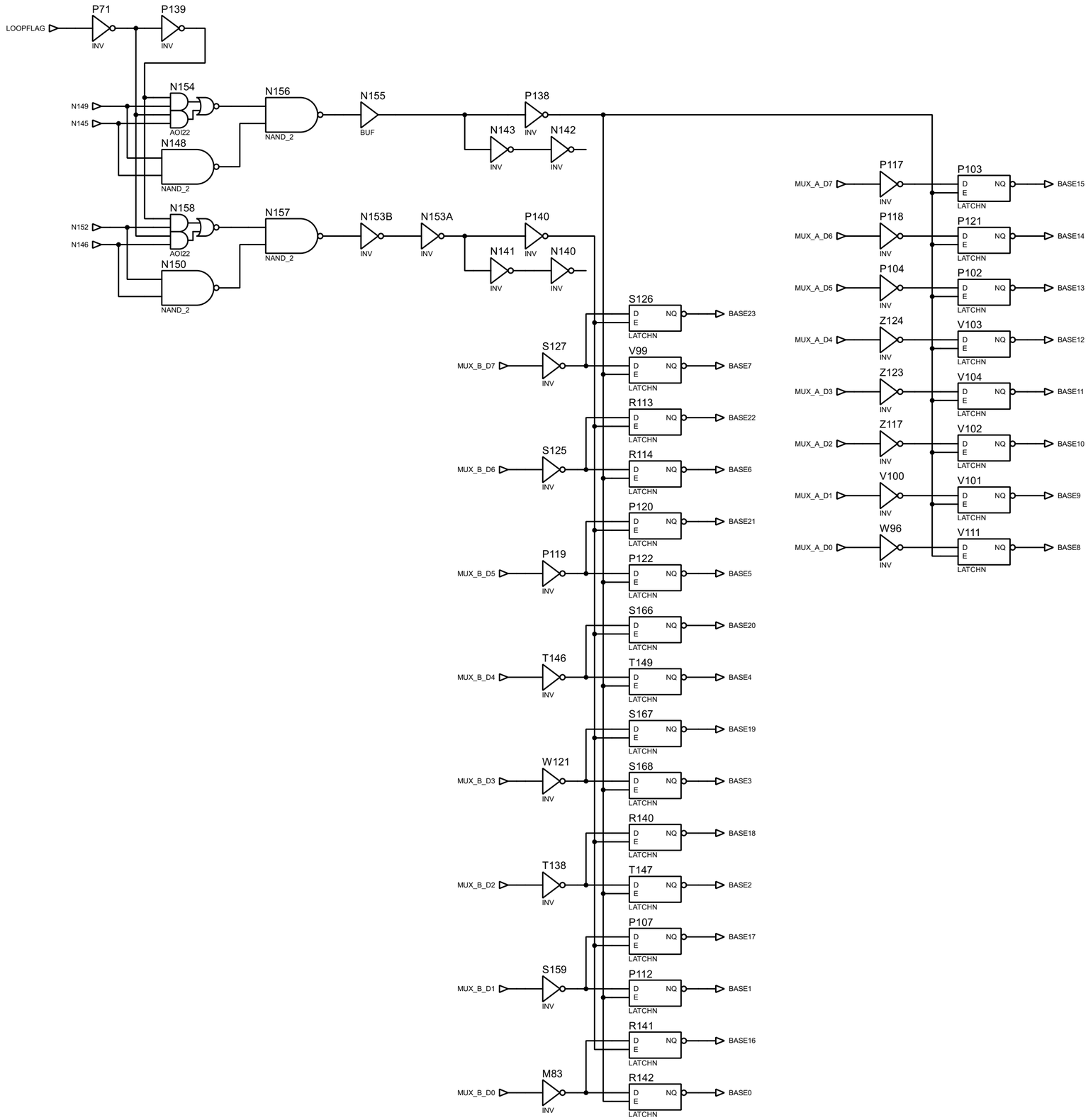

TITLE:	DATE:
Konami 054539 CH START/LOOP ADDR	10/26/2025
BY: Sean Gonsalves REV: @REV	PAGE: 8/54

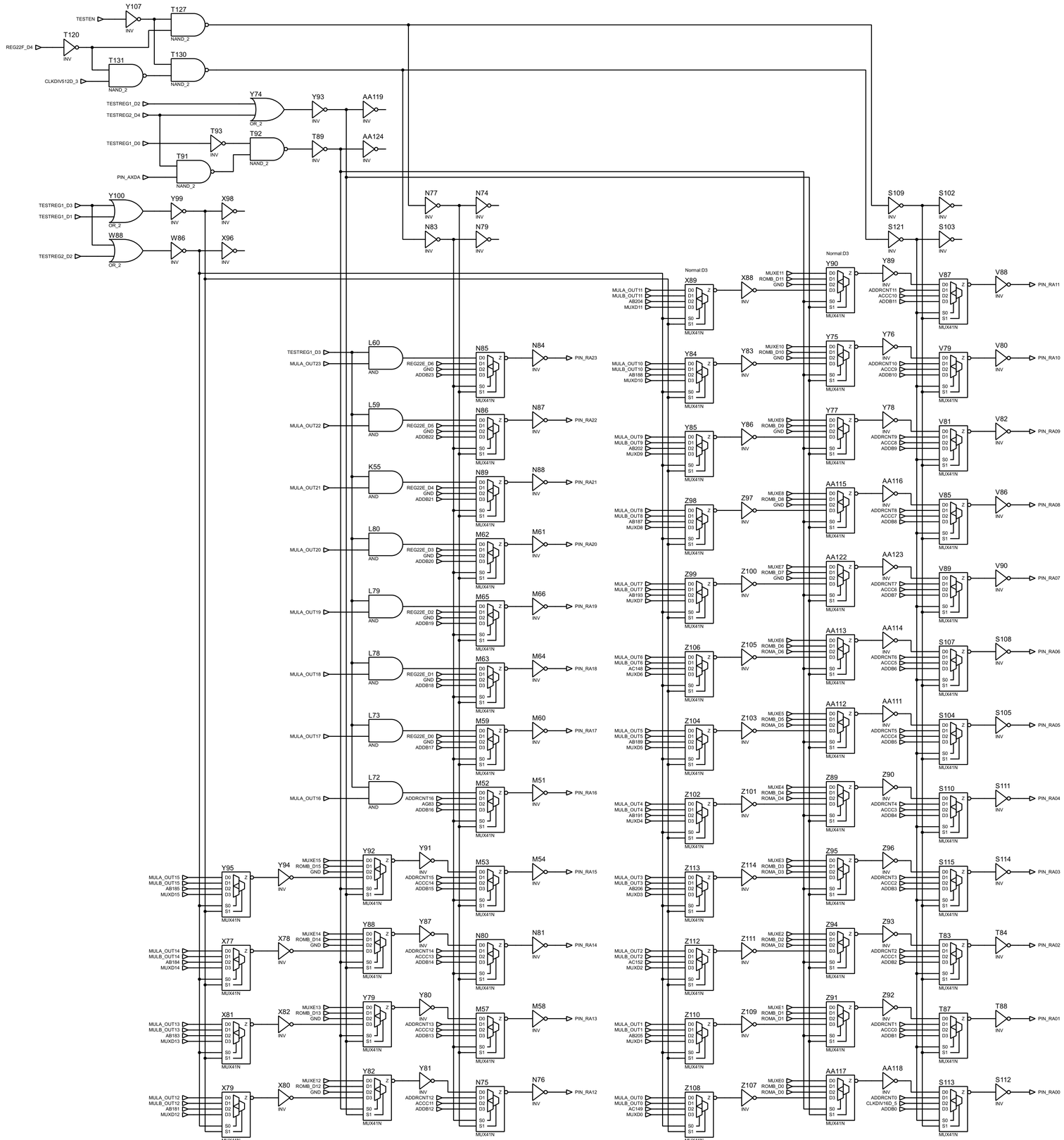

TITLE:	DATE:
Konami 054539 EXT MEM ADDRESS	10/26/2025
BY: Sean Gonsalves REV: @REV	PAGE: 9/54

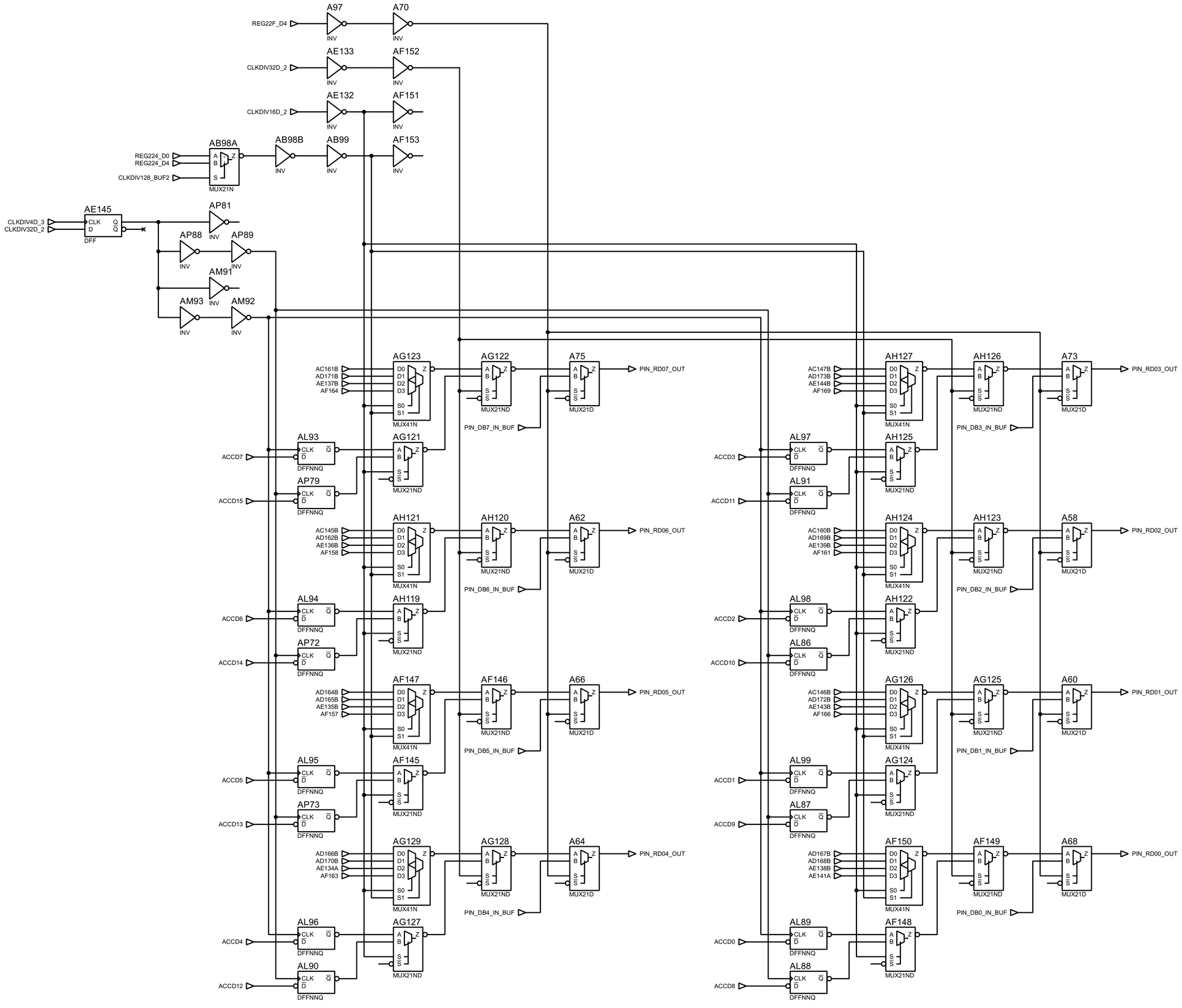

TITLE:	DATE:
Konami 054539 EXT MEM DATA	10/26/2025
BY: Sean Gonsalves REV: @REV	PAGE: 10/54

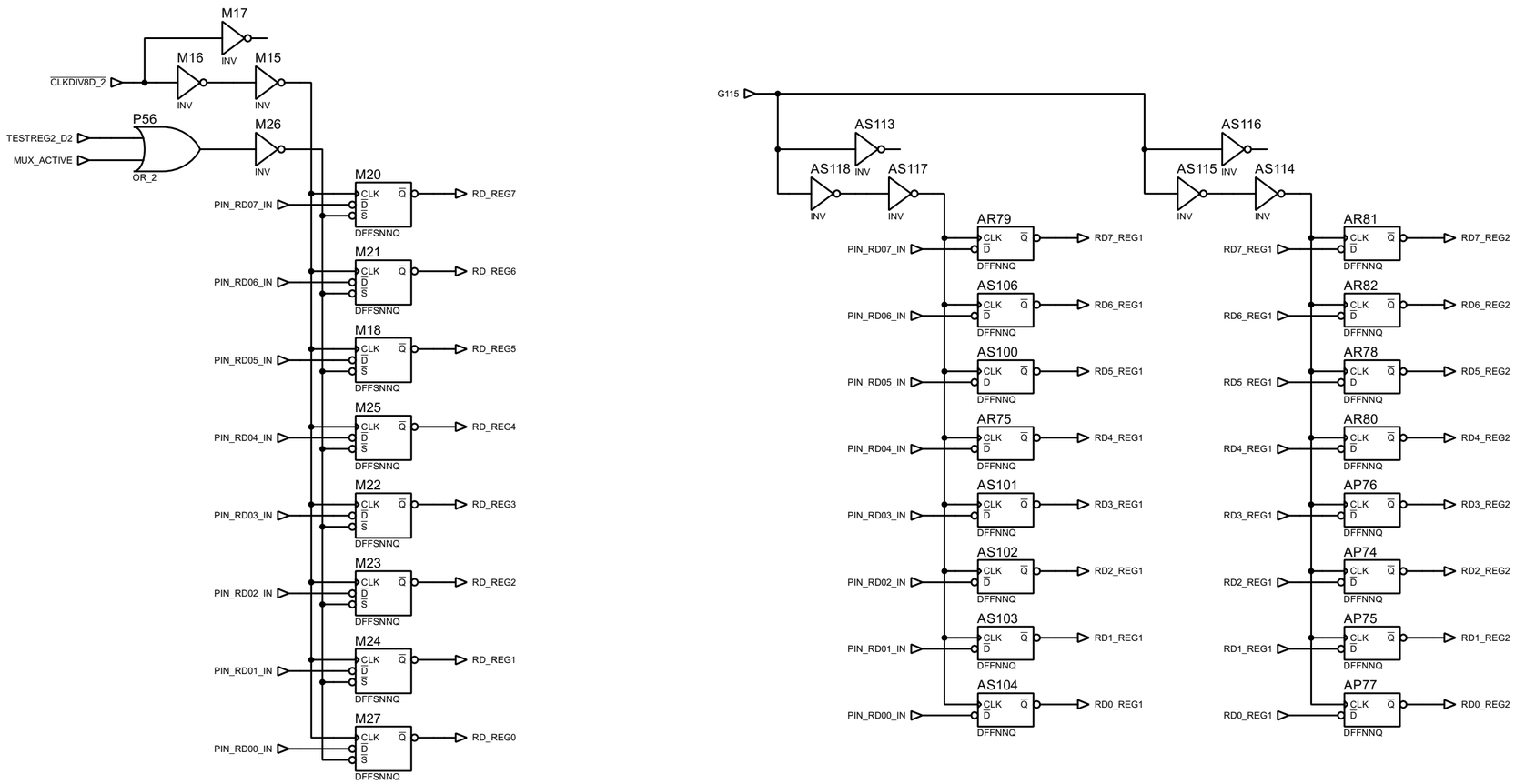

TITLE:	DATE:
Konami 054539 EXT DATA REGISTERS	10/26/2025
BY: Sean Gonsalves REV: @REV	PAGE: 11/54

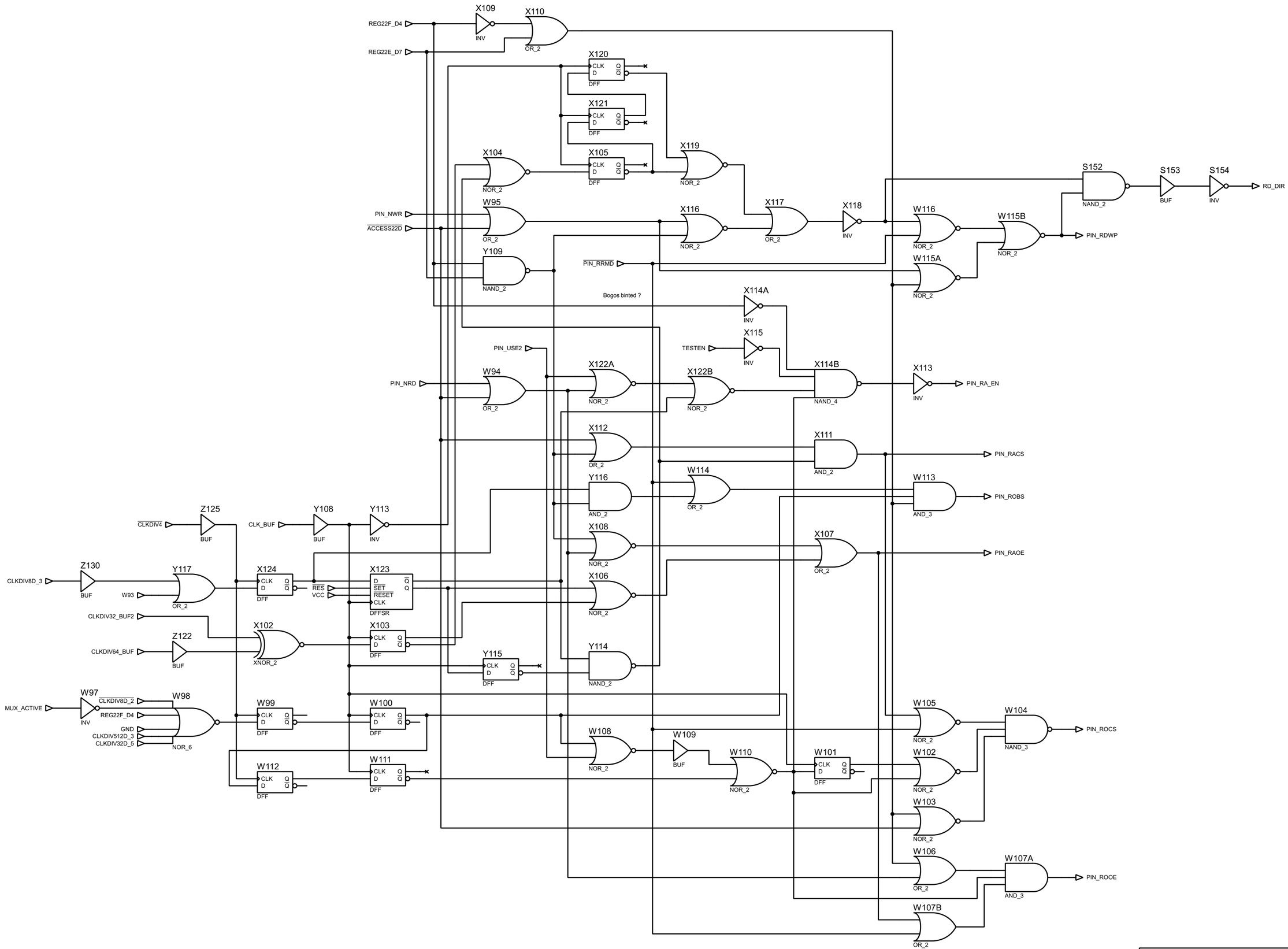

TITLE:	DATE:
Konami 054539 EXT MEM CONTROL	10/26/2025
BY: Sean Gonsalves REV: @REV	PAGE: 12/54

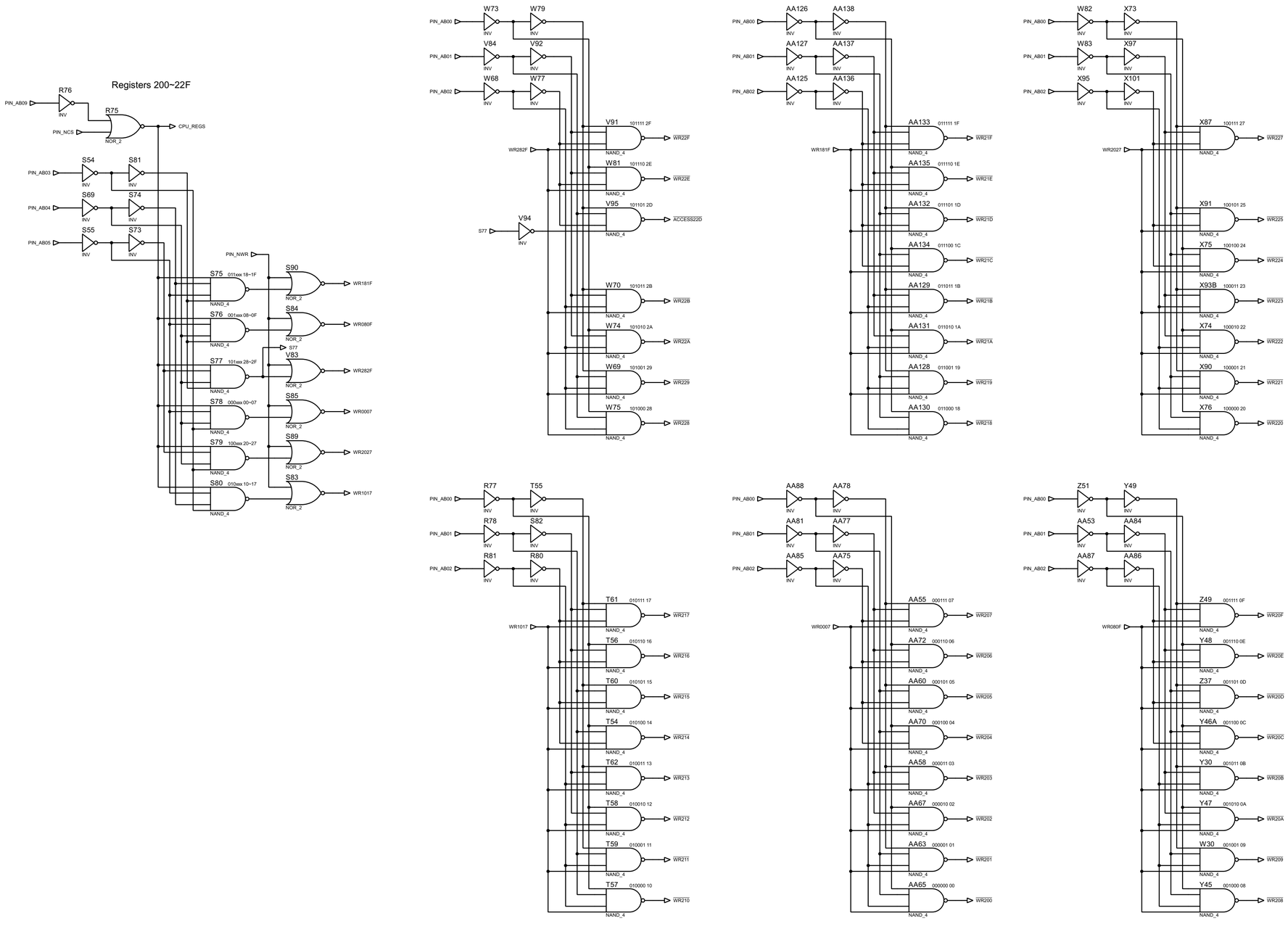

TITLE: Konami 054539 REG DECODE	DATE: 10/26/2025
BY: Sean Gonsalves REV: @REV	PAGE: 13/54

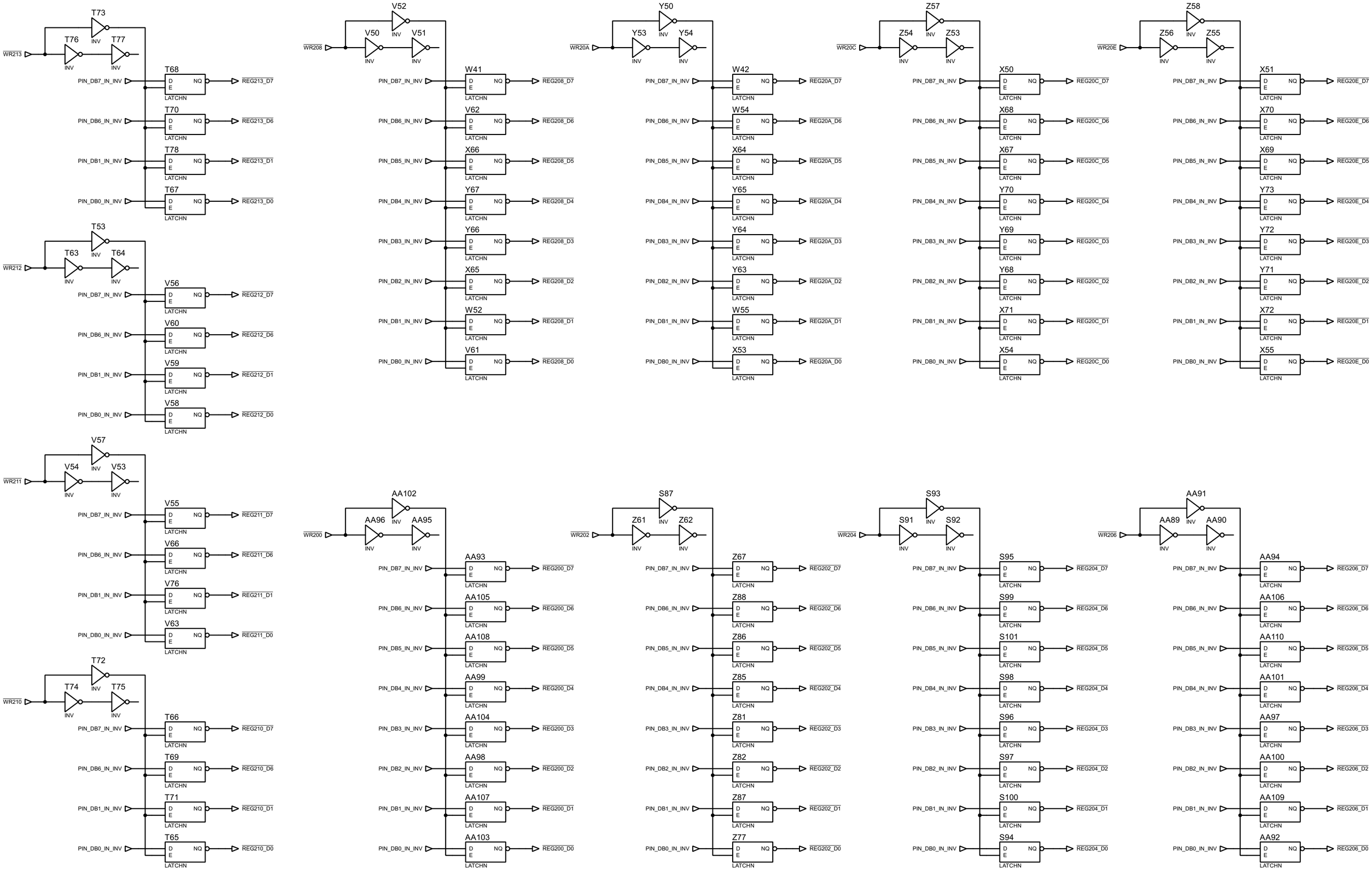

TITLE:	DATE:
Konami 054539 REGS 200~20F EVEN	10/26/2025
BY: Sean Gonsalves REV: @REV	PAGE: 14/54

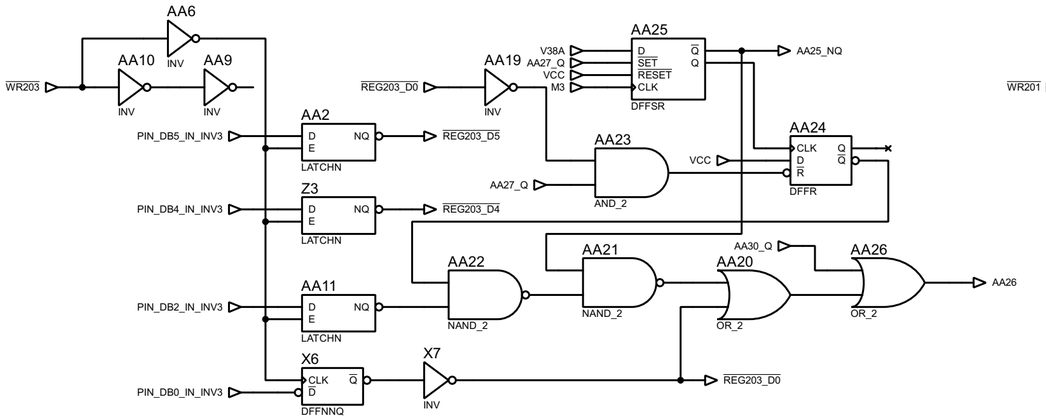

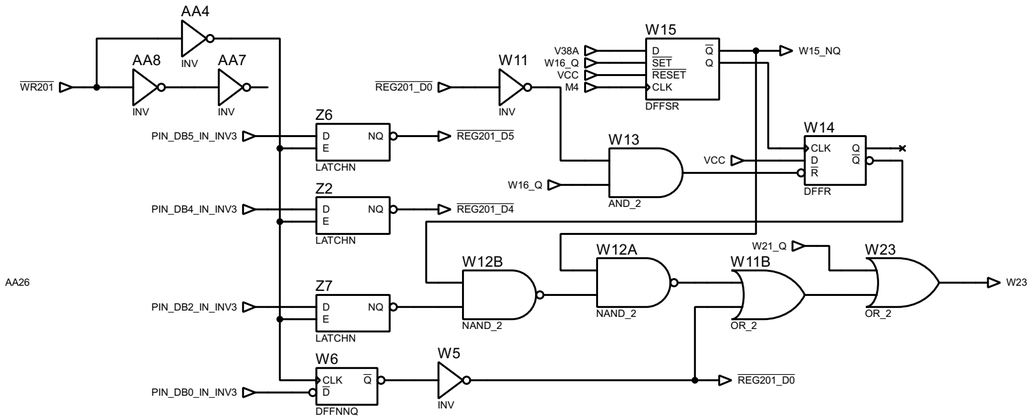

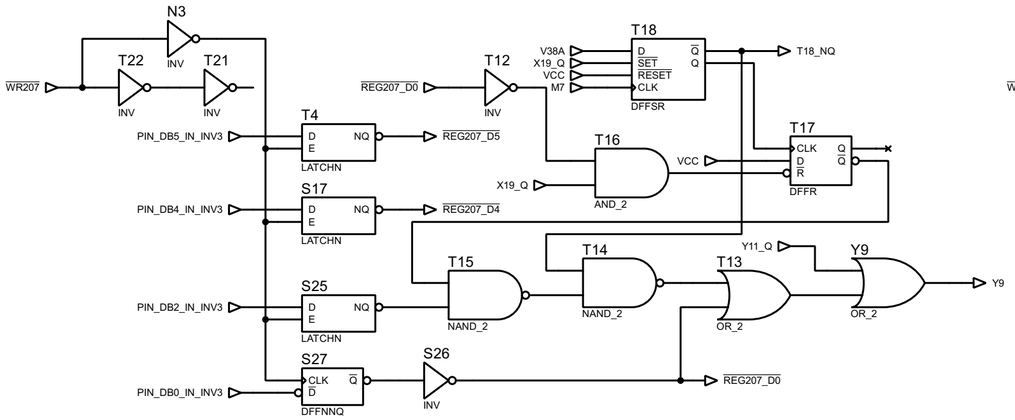

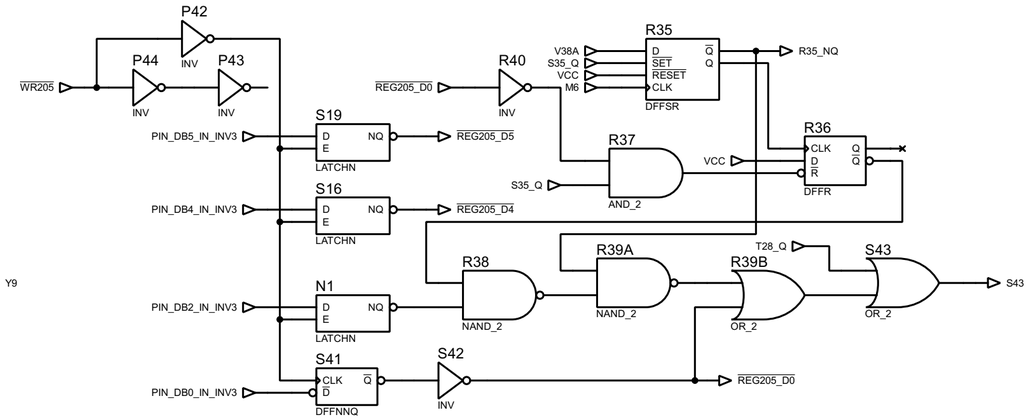

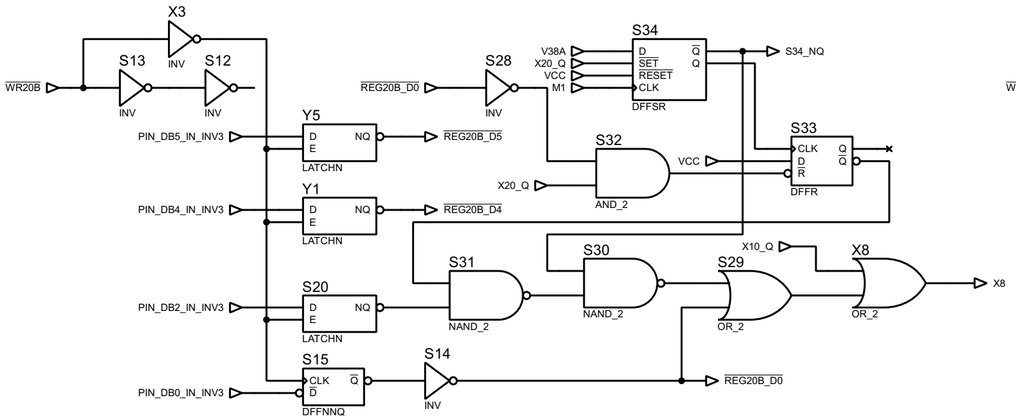

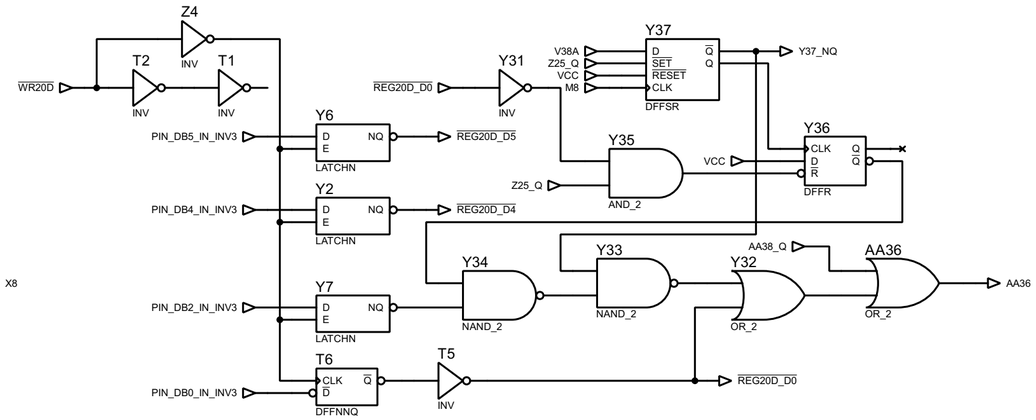

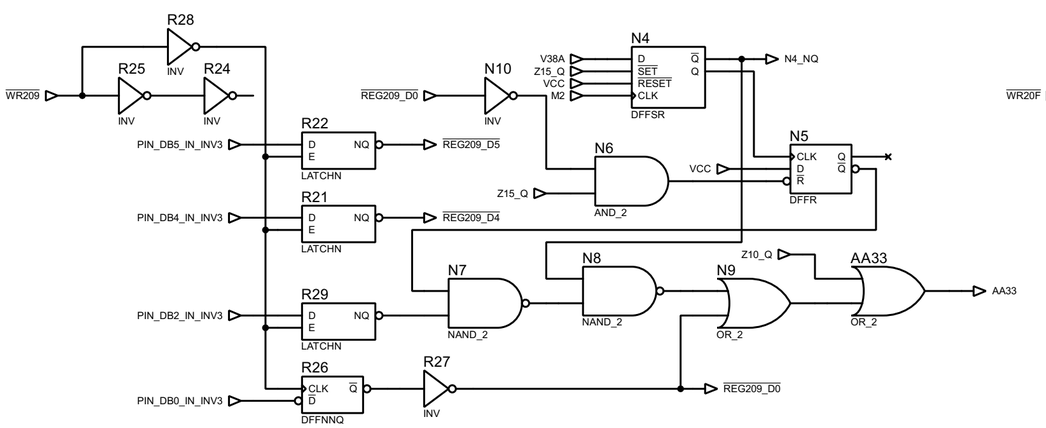

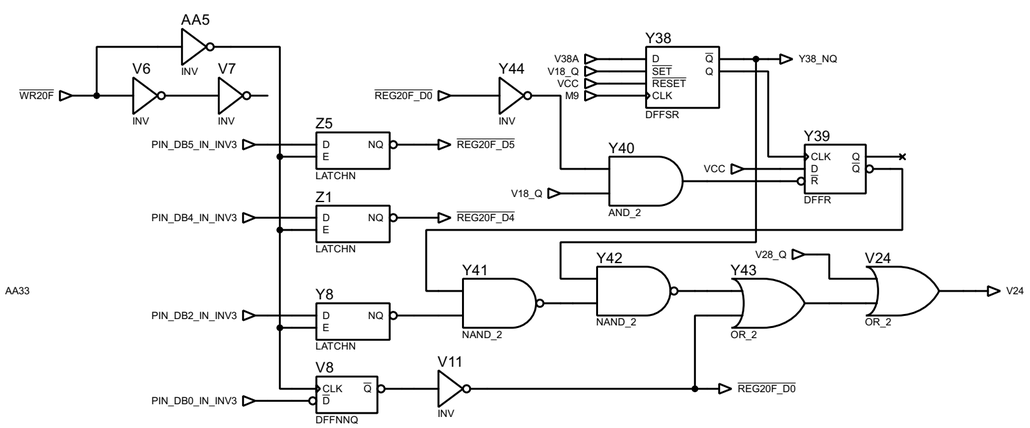

TITLE:	DATE:
Konami 054539 REGS 200~20F ODD	10/26/2025
BY: Sean Gonsalves REV: @REV	PAGE: 15/54

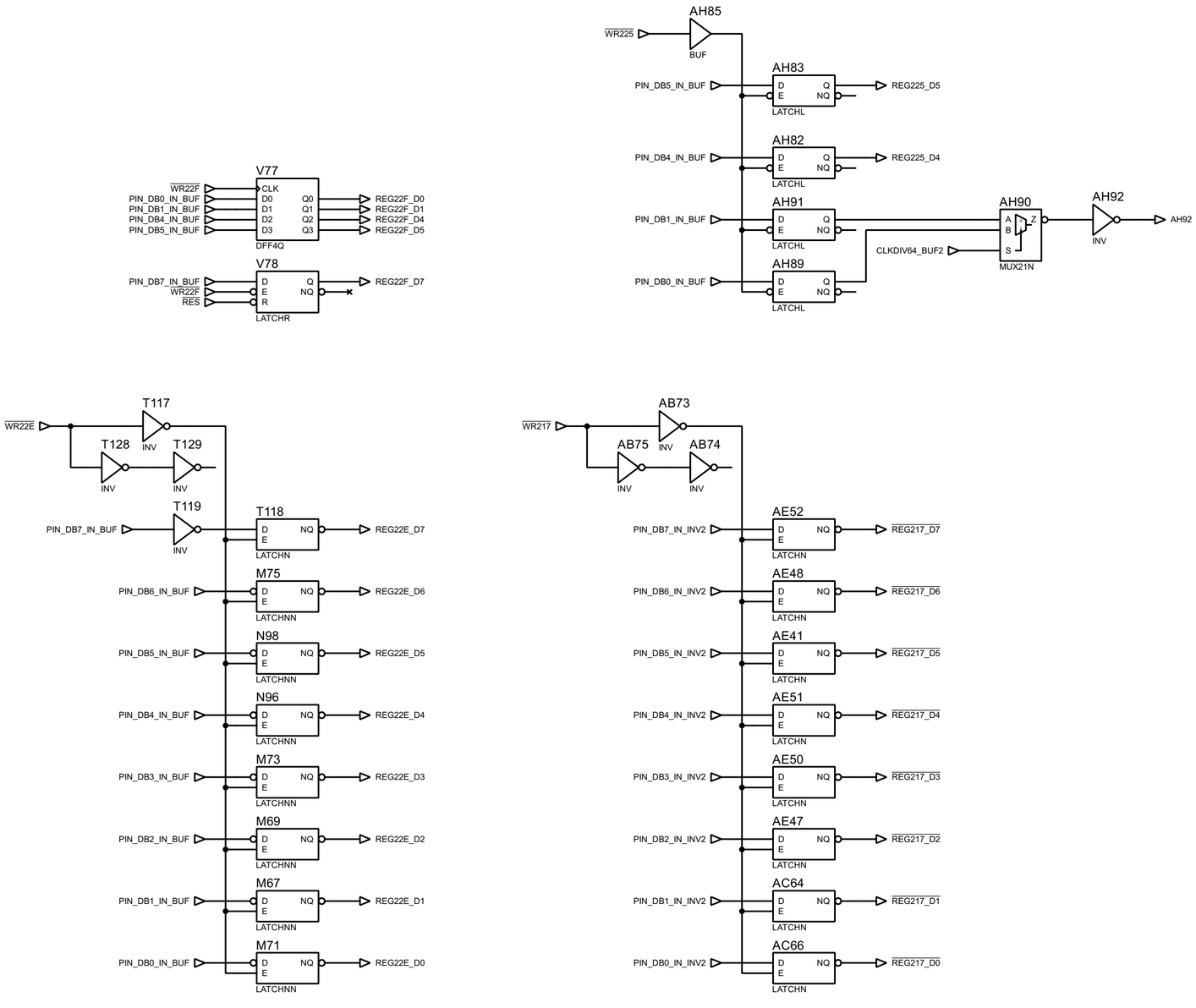

TITLE:	DATE:
Konami 054539 REGISTERS 1	10/26/2025
BY: Sean Gonsalves REV: @REV	PAGE: 16/54

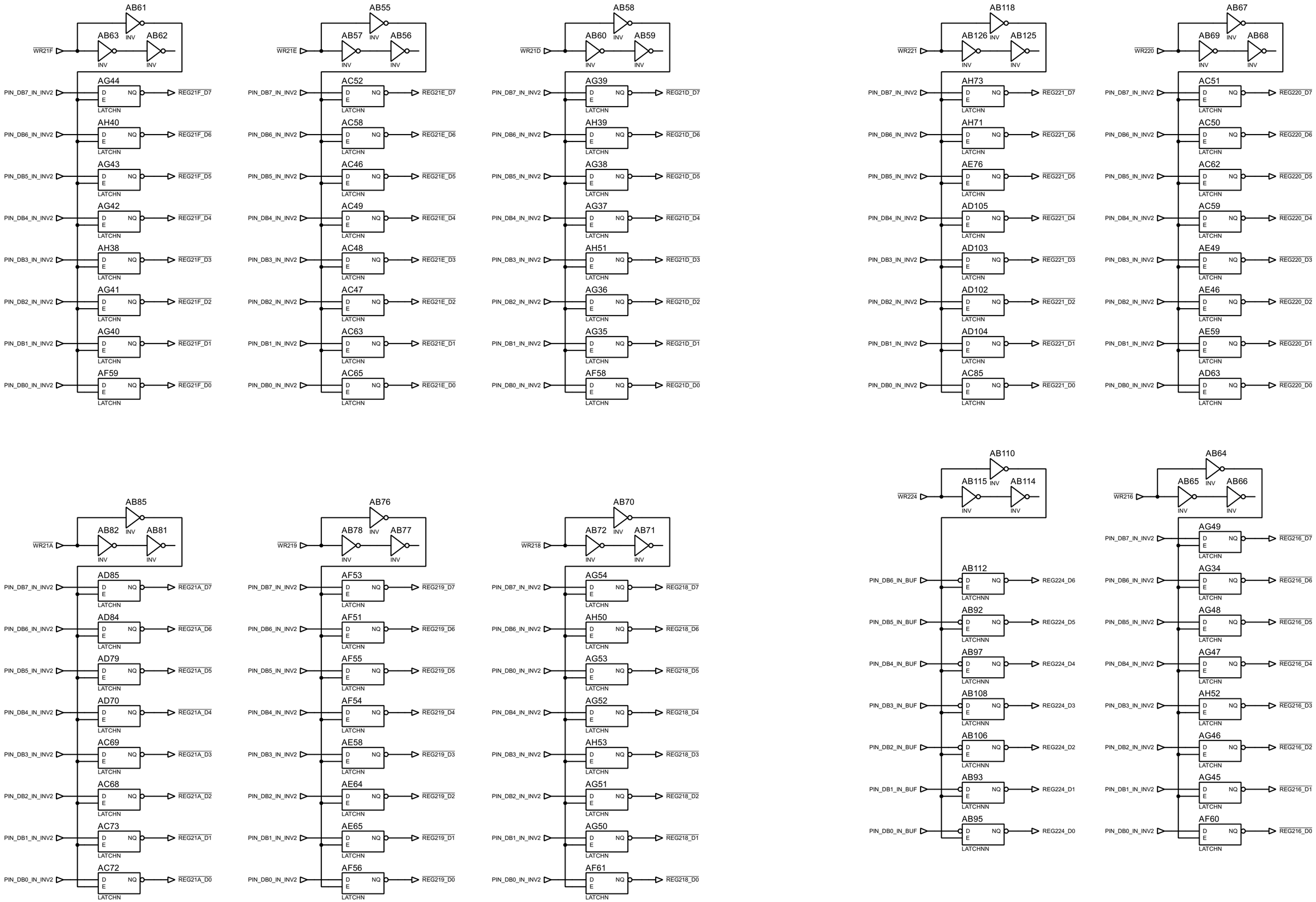

TITLE:	DATE:
Konami 054539 REGISTERS 2	10/26/2025
BY: Sean Gonsalves REV: @REV	PAGE: 17/54

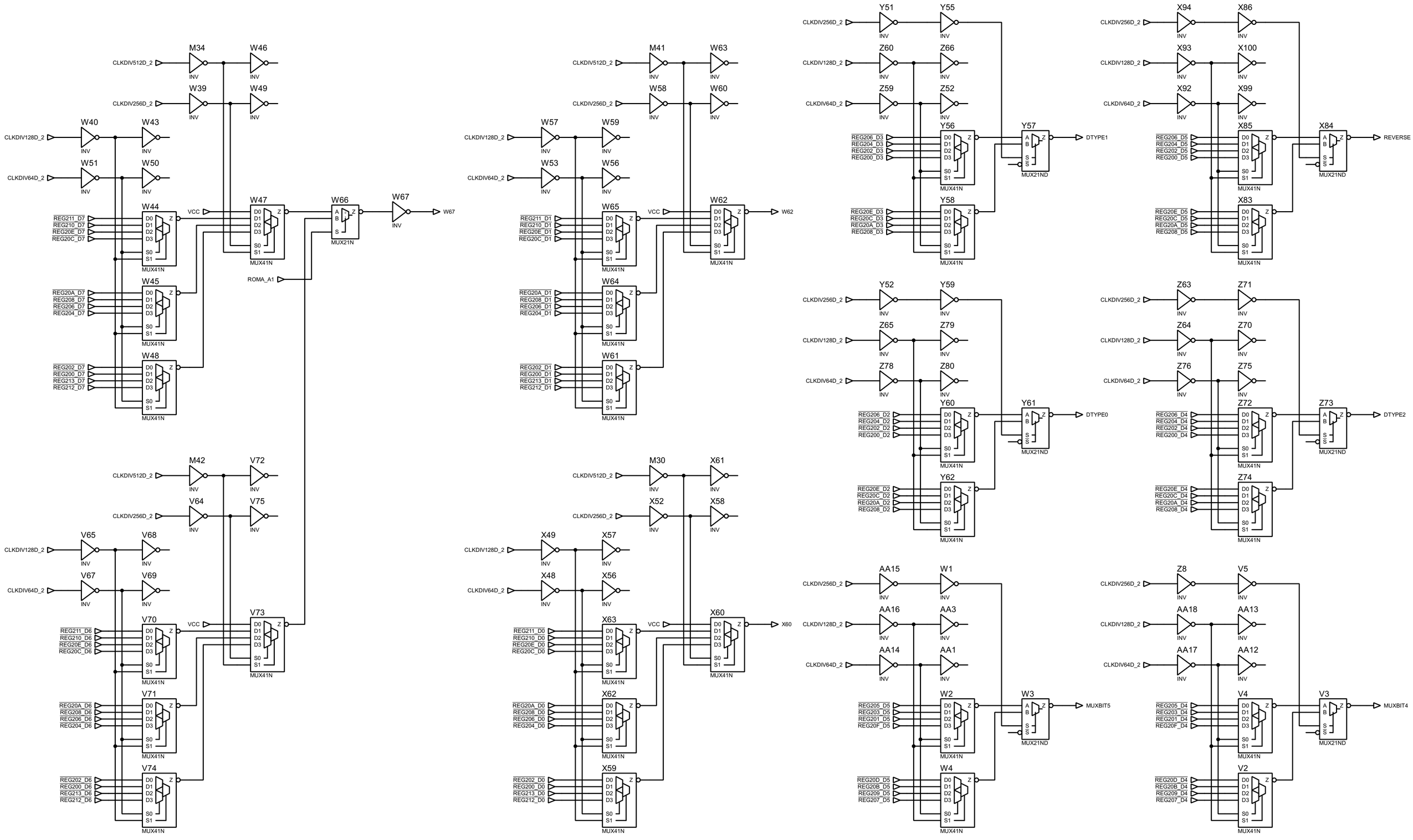

TITLE:	DATE:
Konami 054539 REGISTER MUX	10/26/2025
BY: Sean Gonsalves REV: @REV	PAGE: 18/54

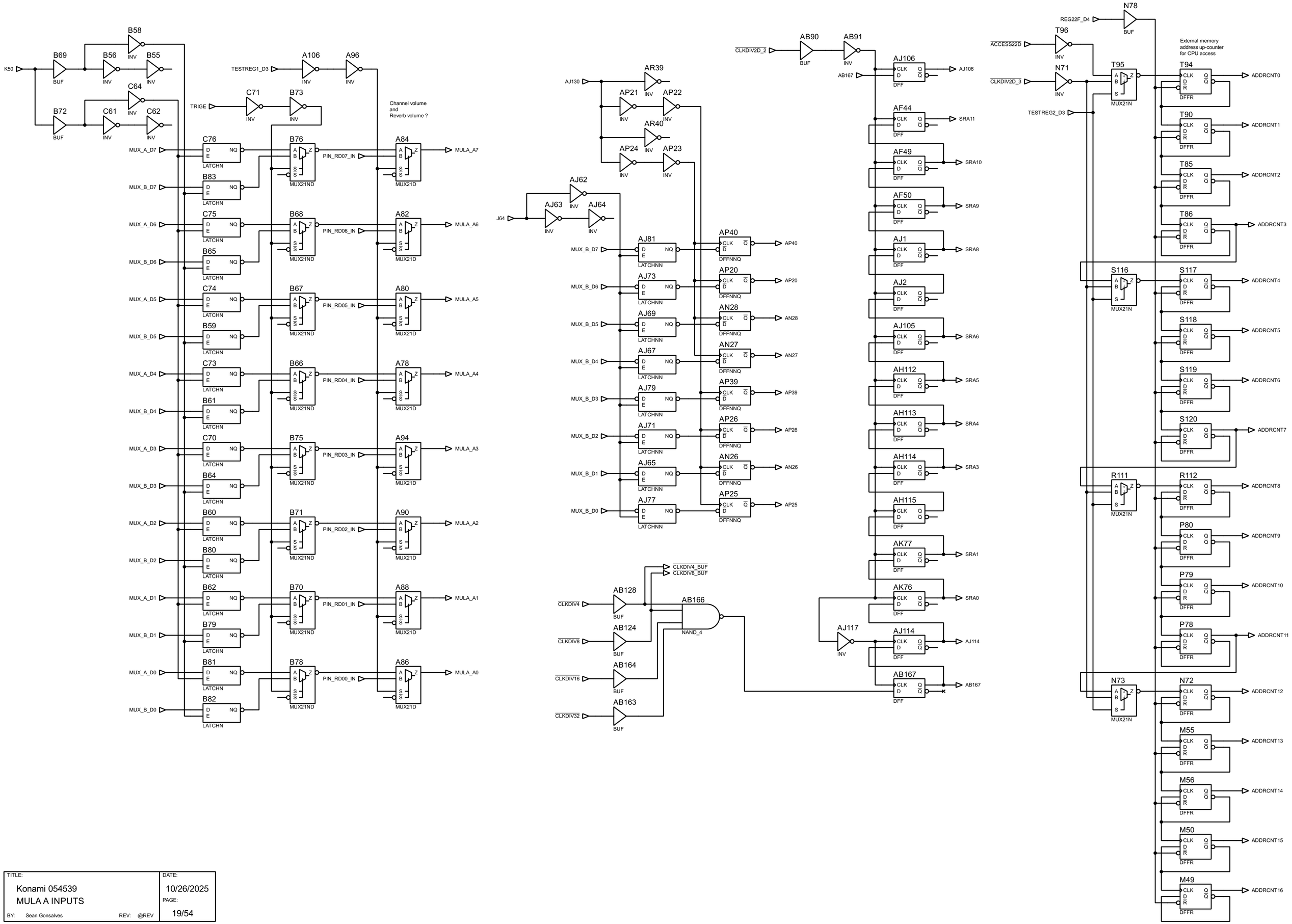

TITLE:	DATE:
Konami 054539 MULA A INPUTS	10/26/2025
BY: Sean Gonsalves REV: @REV	PAGE: 19/54

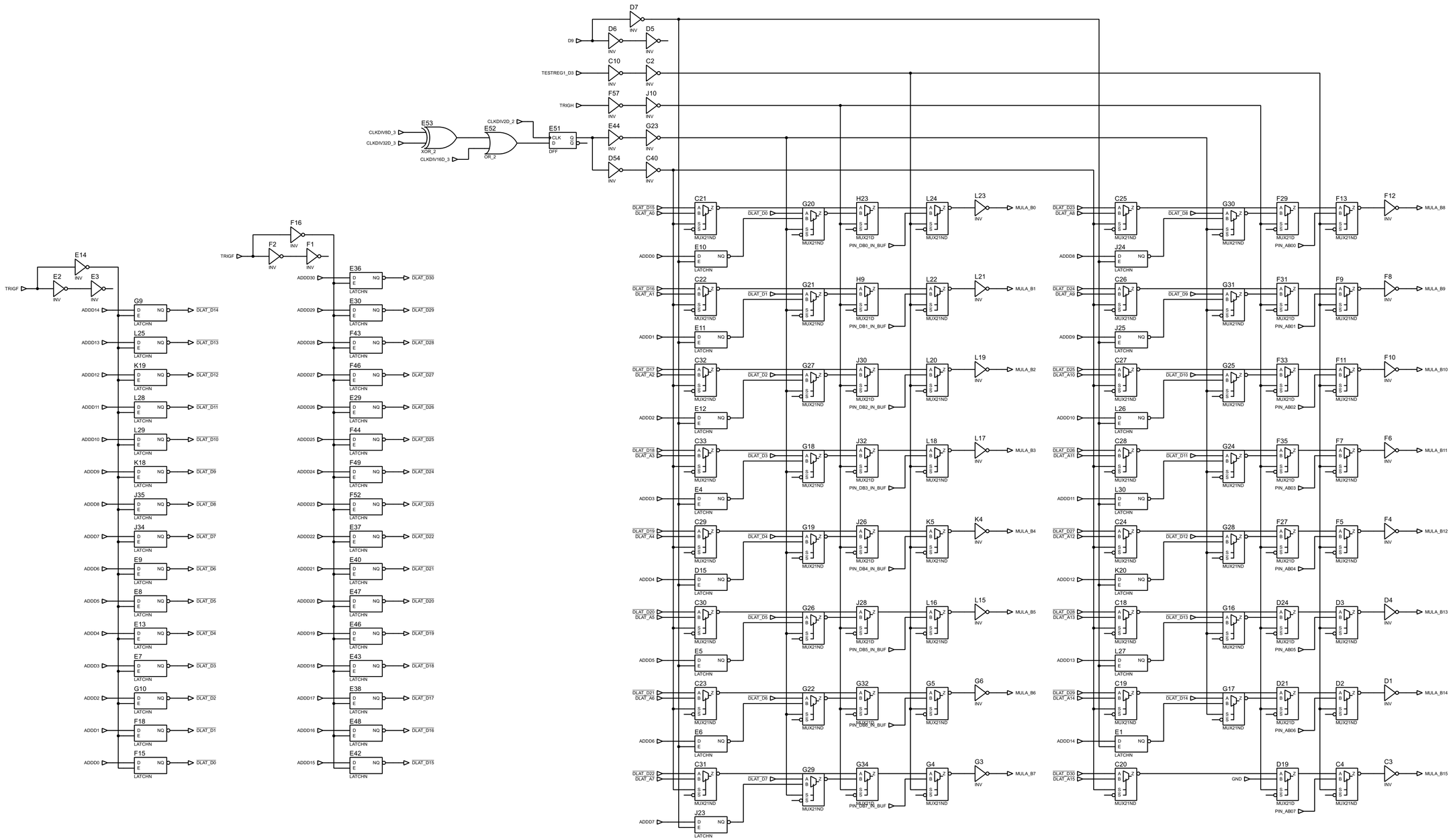

TITLE:	DATE:
Konami 054539 MULA B INPUTS	10/26/2025
BY: Sean Gonsalves REV: @REV	PAGE: 20/54

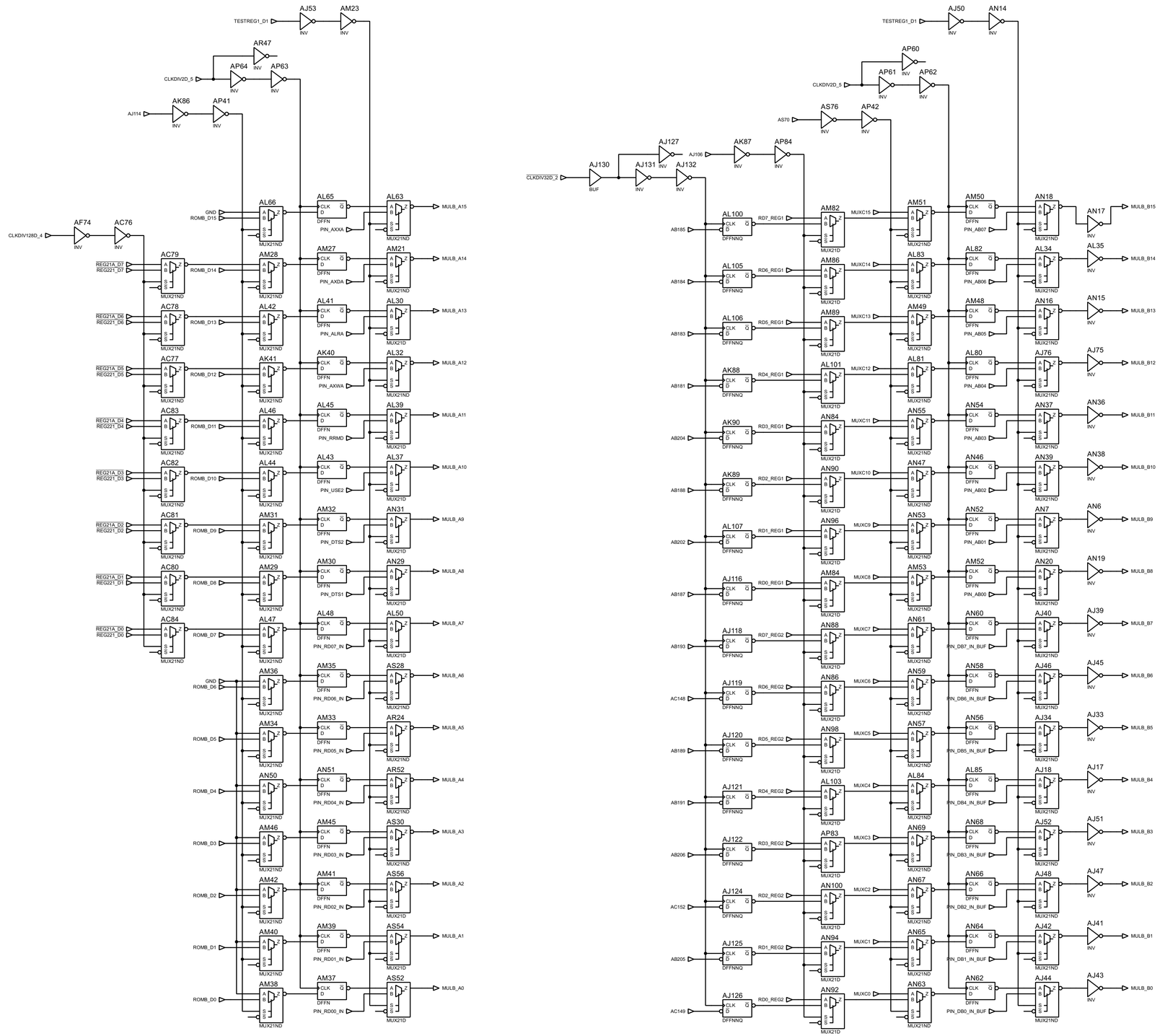

TITLE:	DATE:
Konami 054539 MULB INPUTS	10/26/2025
BY: Sean Gonsalves REV: @REV	PAGE: 21/54

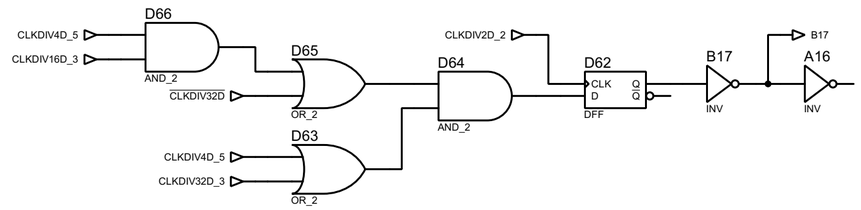

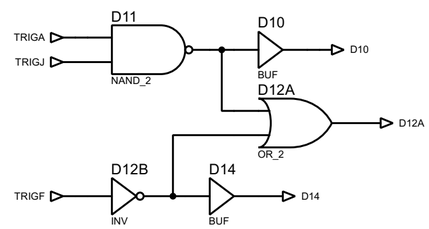

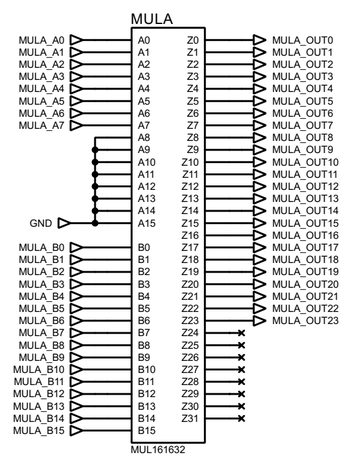

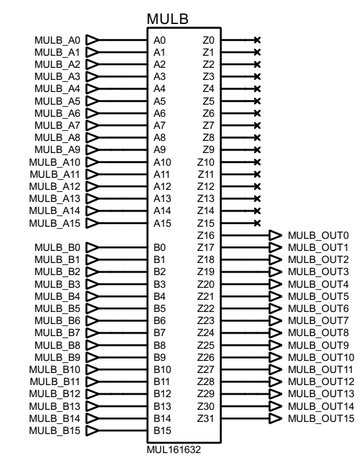

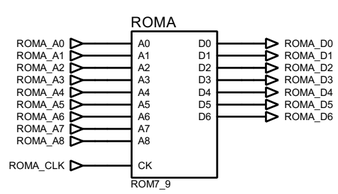

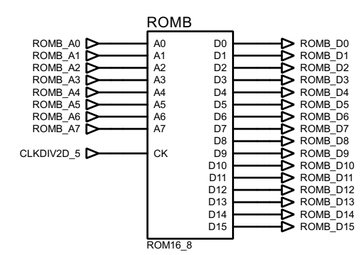

TITLE:	DATE:
Konami 054539 ROM AND MULTIPLIERS	10/26/2025
BY: Sean Gonsalves REV: @REV	PAGE: 22/54

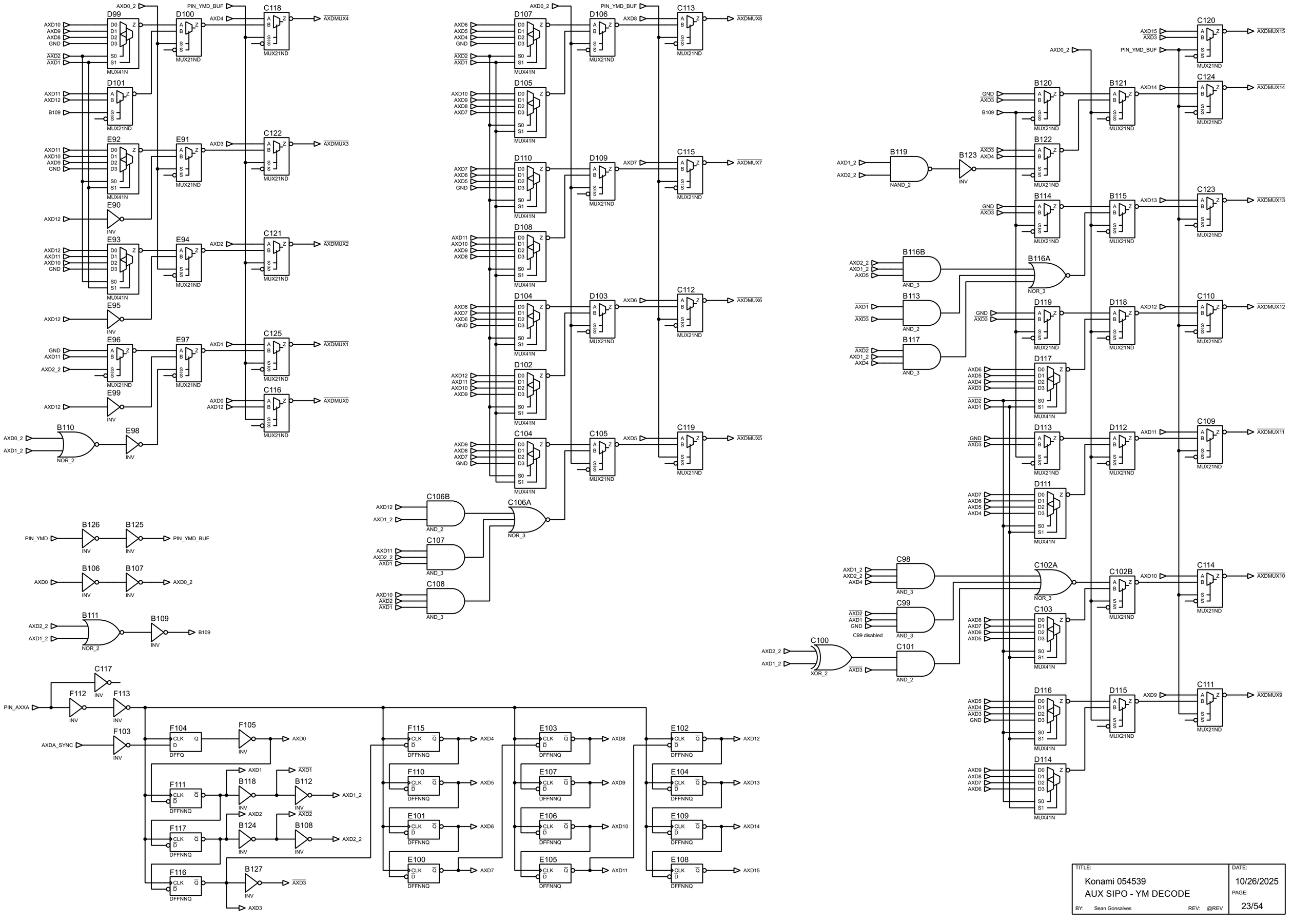

TITLE:	DATE:
Konami 054539 AUX SIPO - YM DECODE	10/26/2025
BY: Sean Gonsalves REV: @REV	PAGE: 23/54

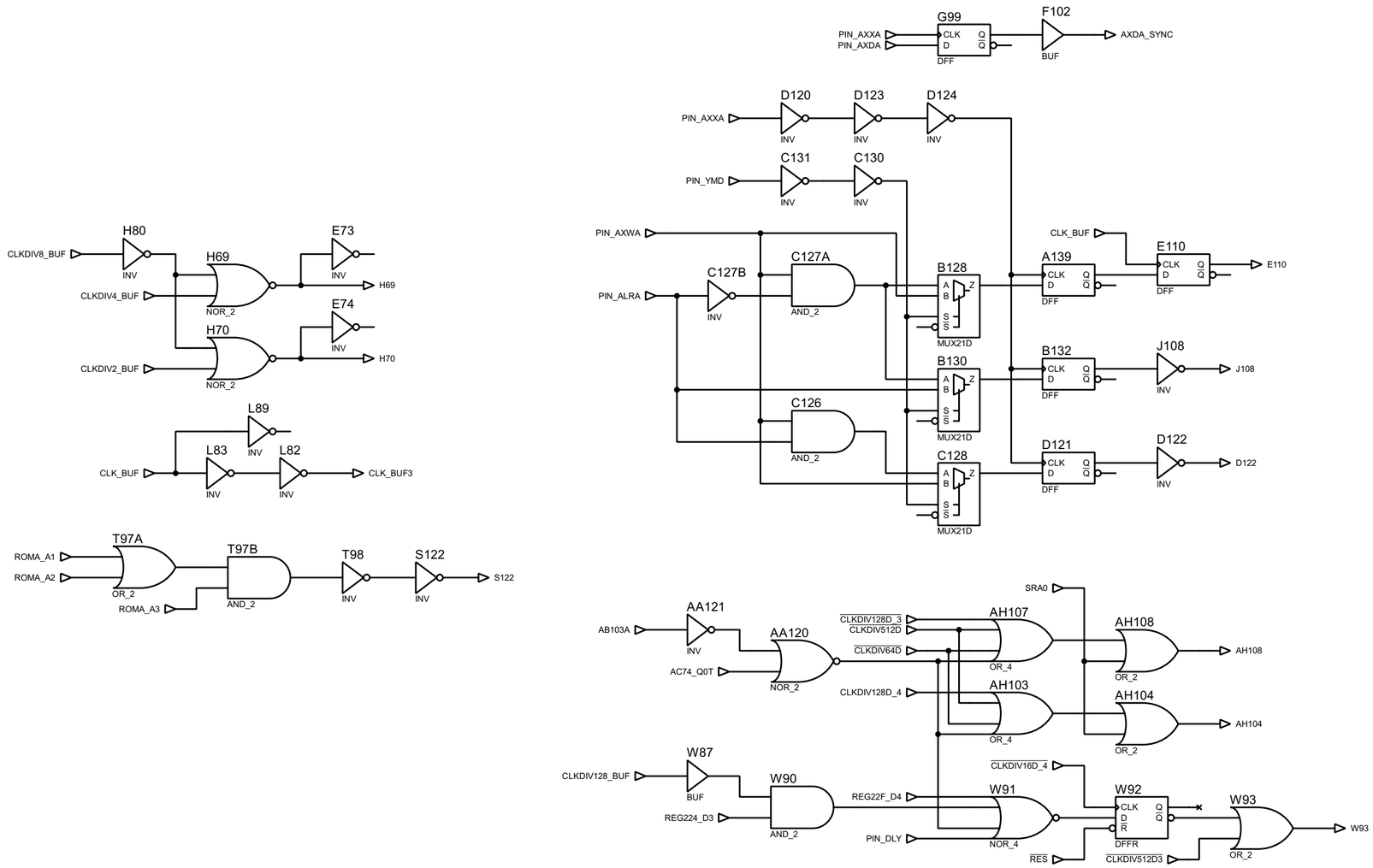

TITLE:	DATE:
Konami 054539 AUX DATA CONTROL	10/26/2025
BY: Sean Gonsalves REV: @REV	PAGE: 24/54

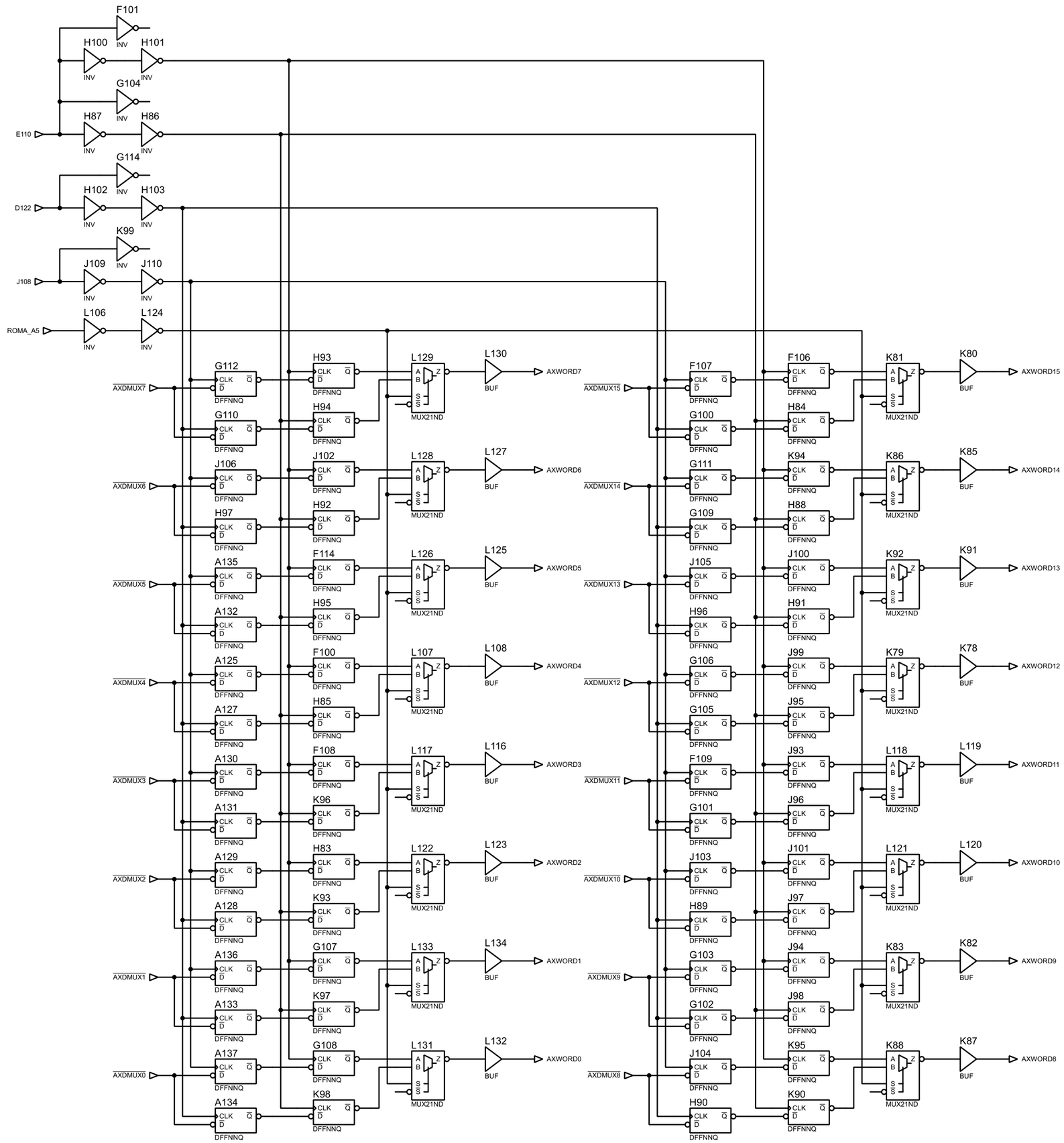

TITLE:	DATE:
Konami 054539 AUX DATA LATCHES	10/26/2025
BY: Sean Gonsalves REV: @REV	PAGE: 25/54

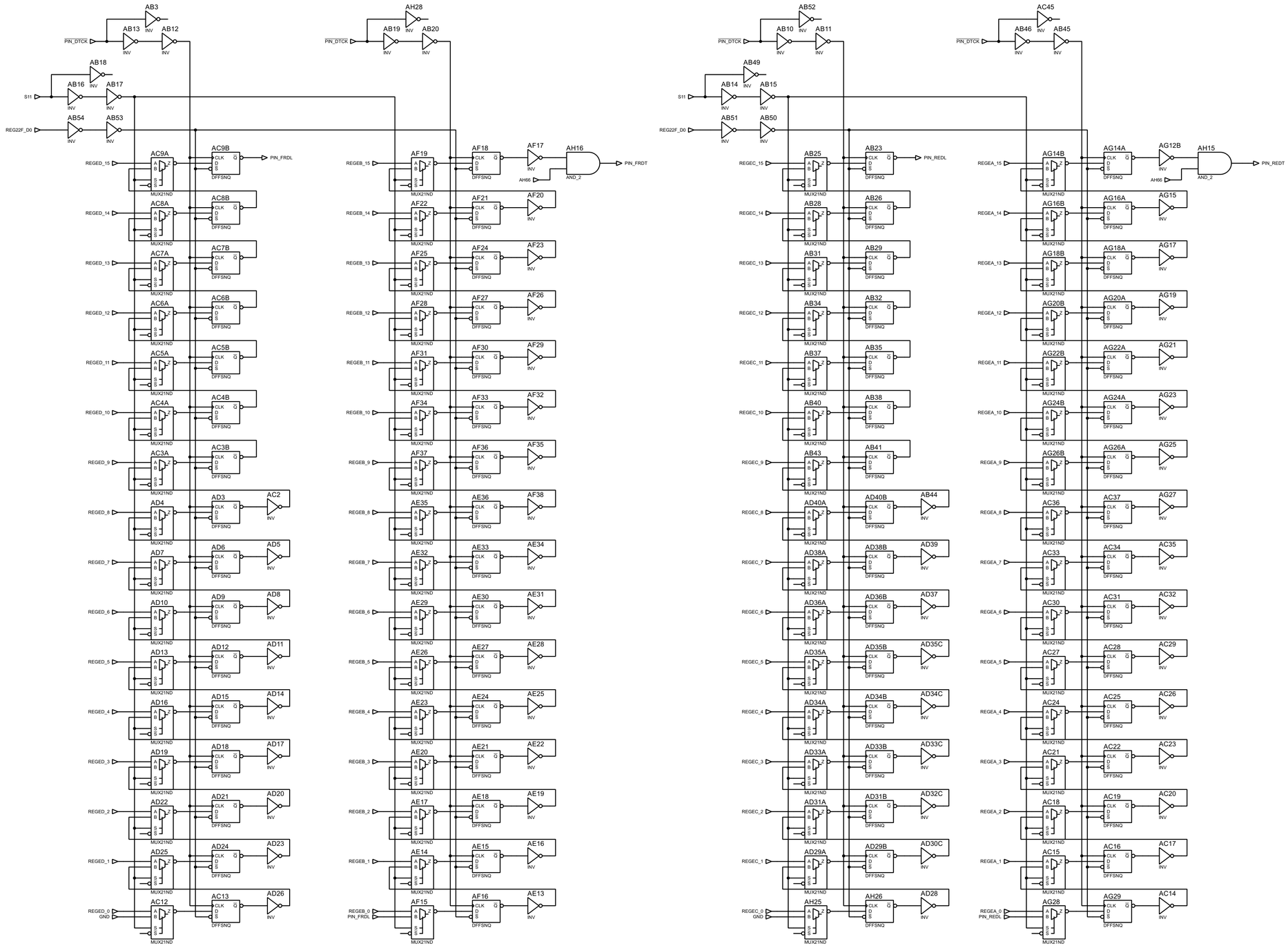

TITLE:	DATE:
Konami 054539 AUX PISO	10/26/2025 PAGE:
BY: Sean Gonsalves REV: @REV	26/54

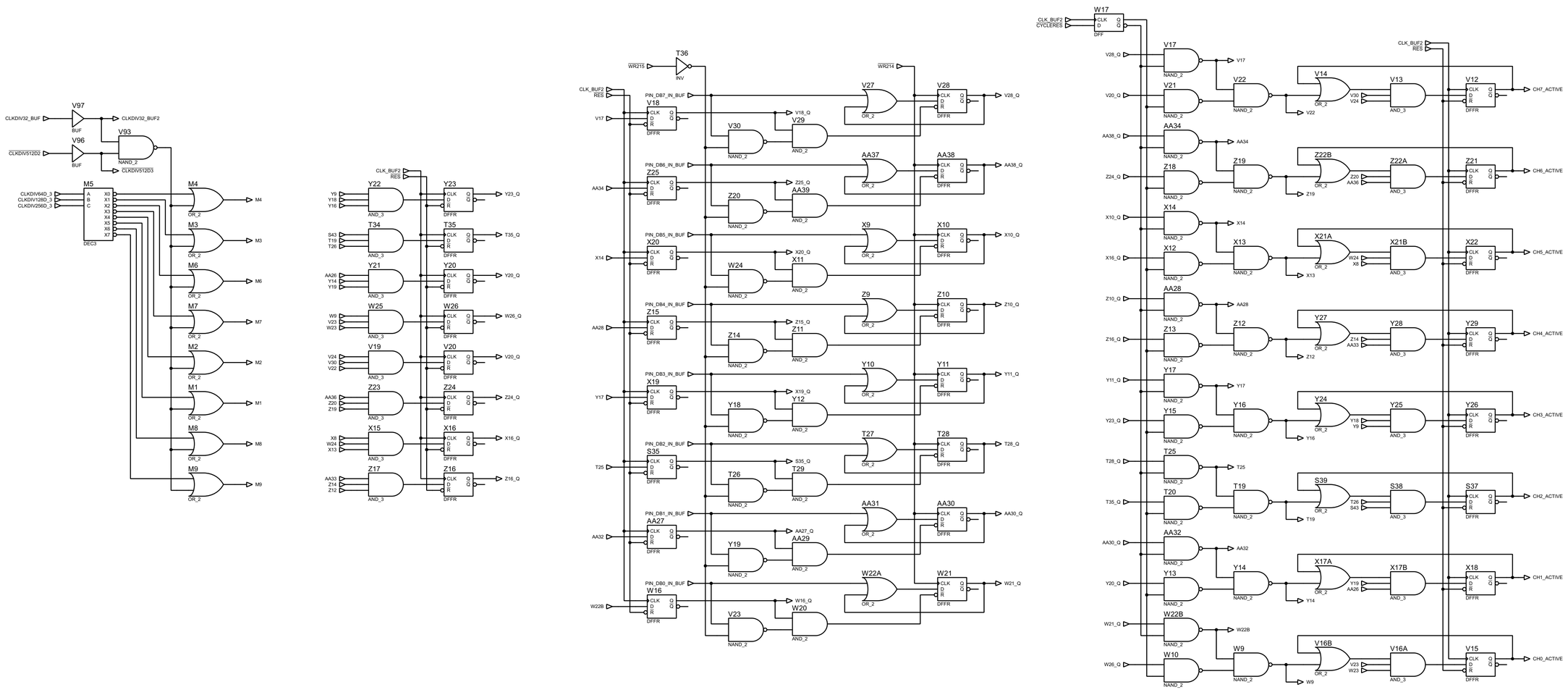

TITLE:	DATE:
Konami 054539 KEY ON/OFF	10/26/2025
BY: Sean Gonsalves REV: @REV	PAGE: 27/54

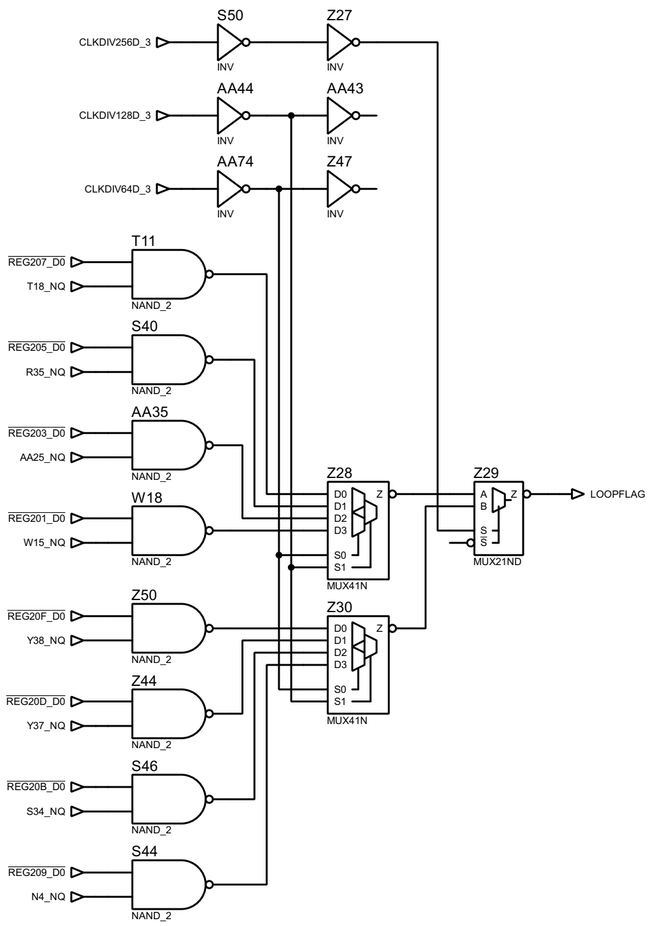

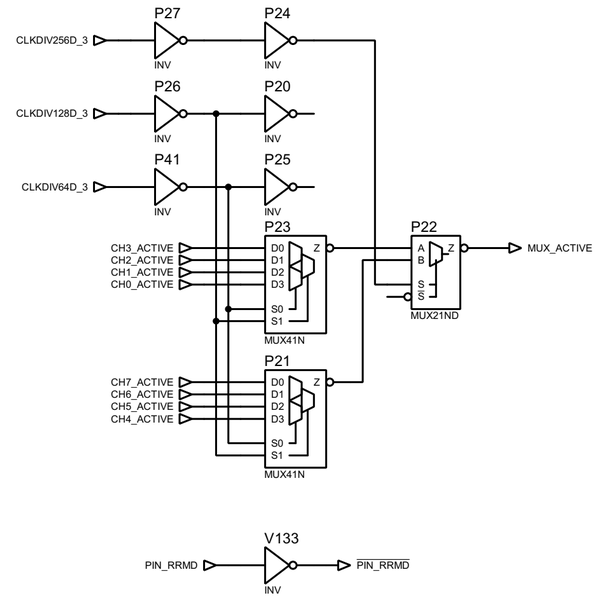

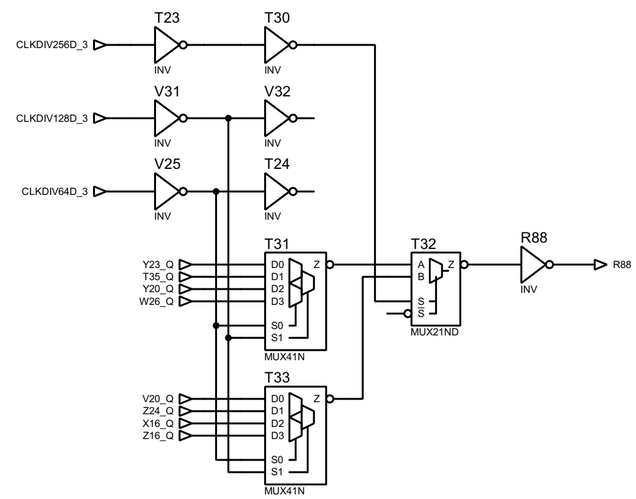

TITLE:	DATE:
Konami 054539 START/STOP	10/26/2025
BY: Sean Gonsalves REV: @REV	PAGE: 28/54

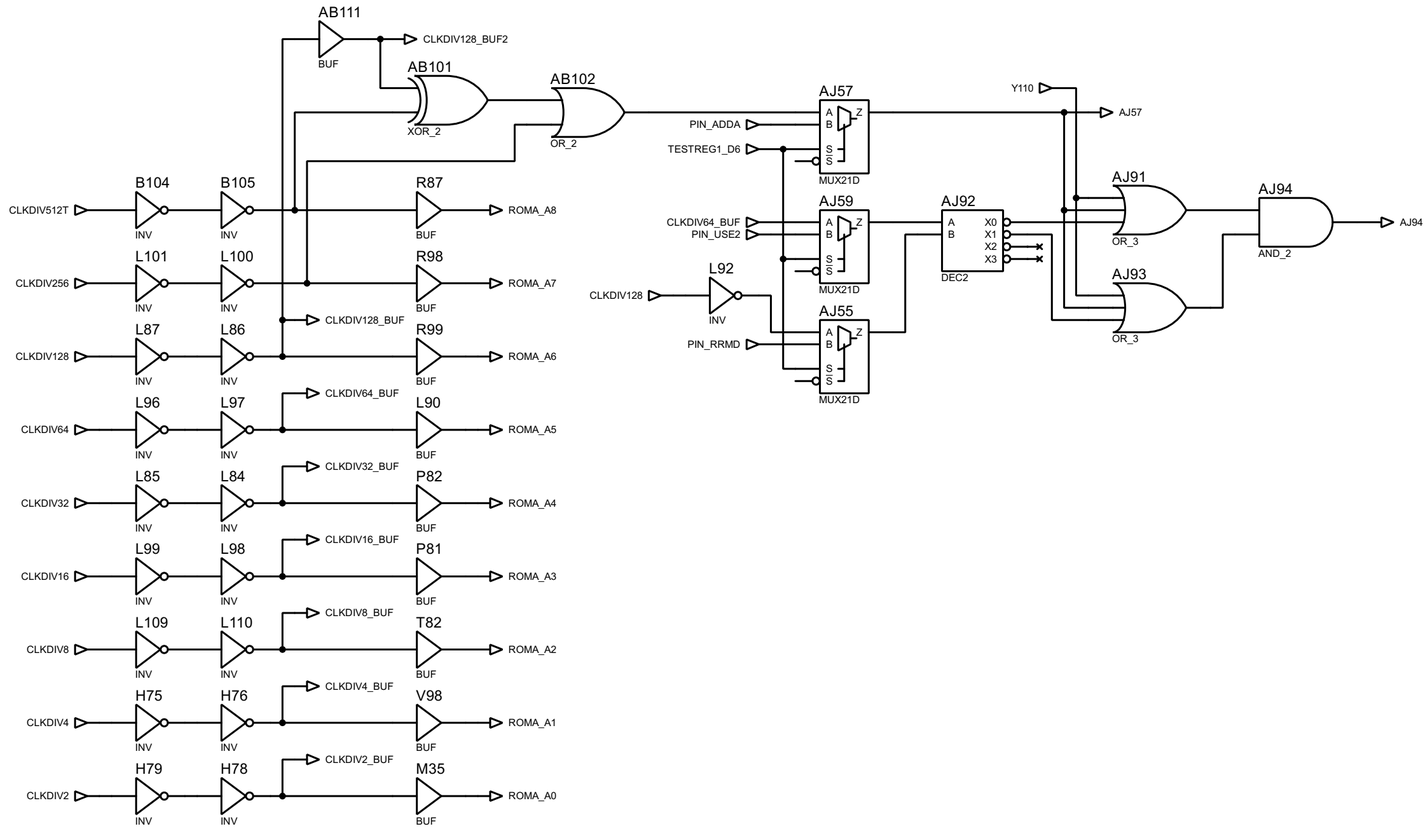

TITLE:	DATE:
Konami 054539 ROMA ADDRESS	10/26/2025
BY: Sean Gonsalves REV: @REV	PAGE: 29/54

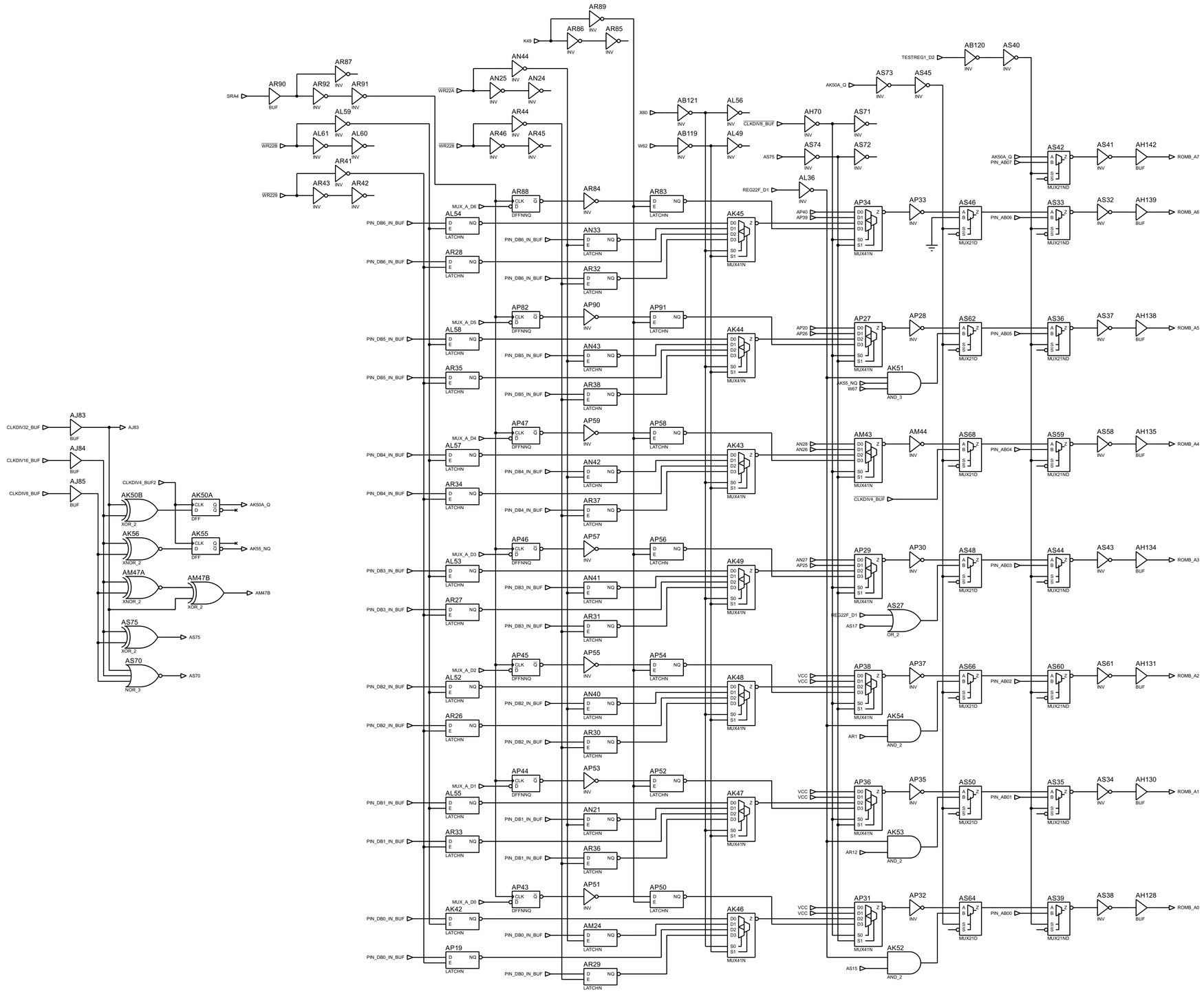

TITLE:	DATE:
Konami 054539 ROMB ADDRESS	10/26/2025
BY: Sean Gonsalves REV: @REV	PAGE: 30/54

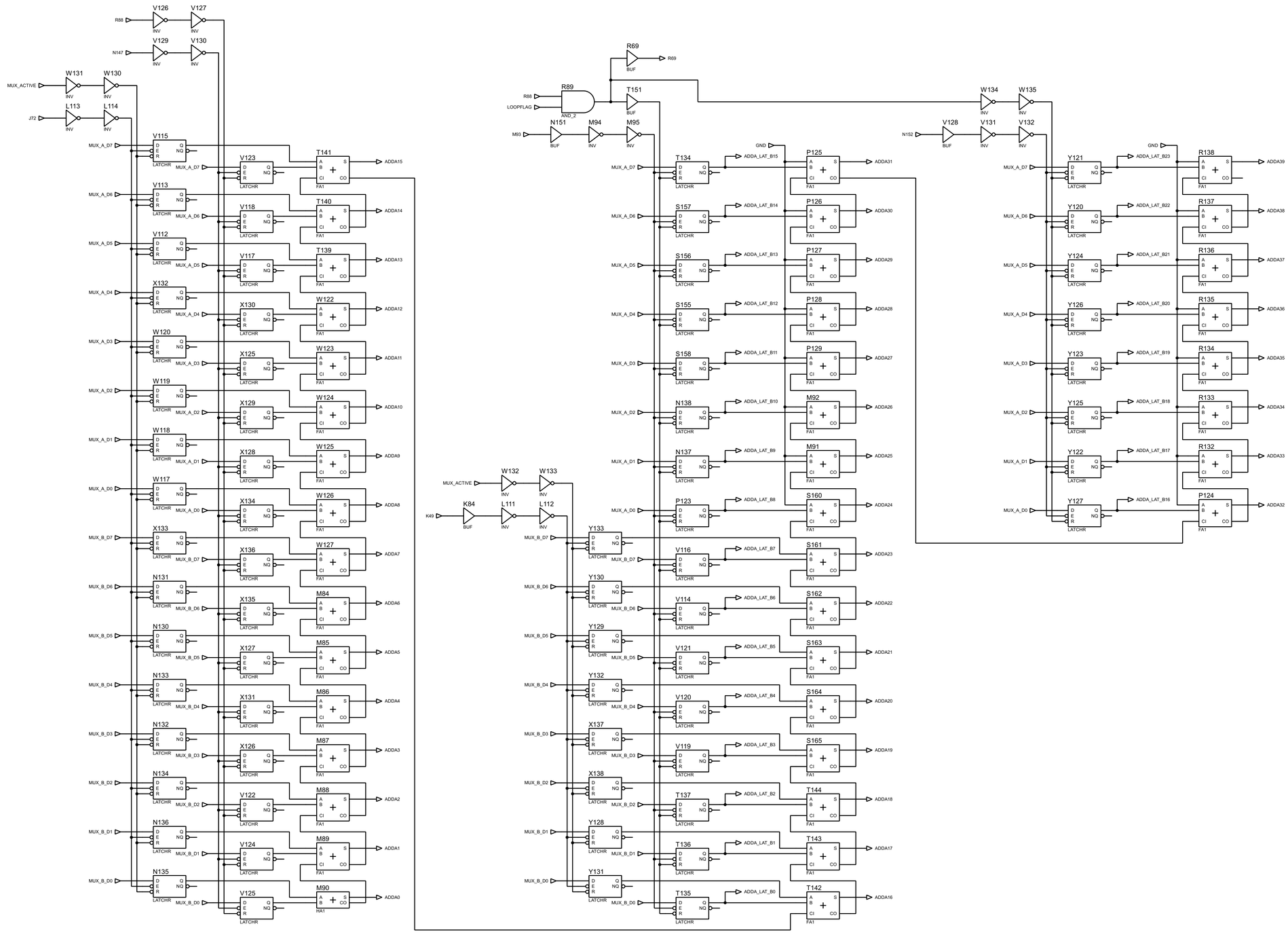

TITLE:	DATE:
Konami 054539 ADDER A - FRAC	10/26/2025
BY: Sean Gonsalves REV: @REV	PAGE: 31/54

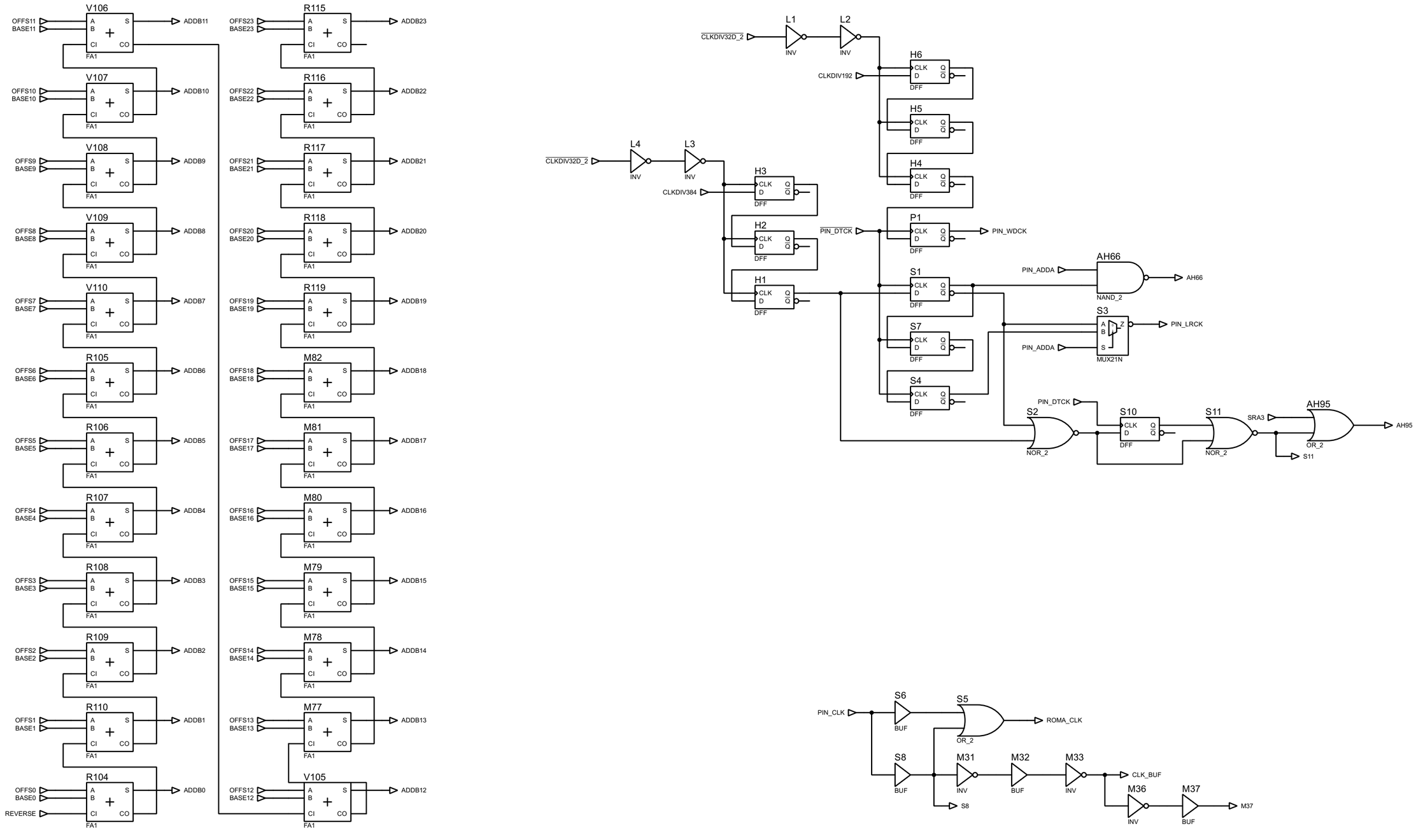

TITLE:	DATE:
Konami 054539 ADDER B - SAMPLE ADDRESS	10/26/2025
BY: Sean Gonsalves REV: @REV	PAGE: 32/54

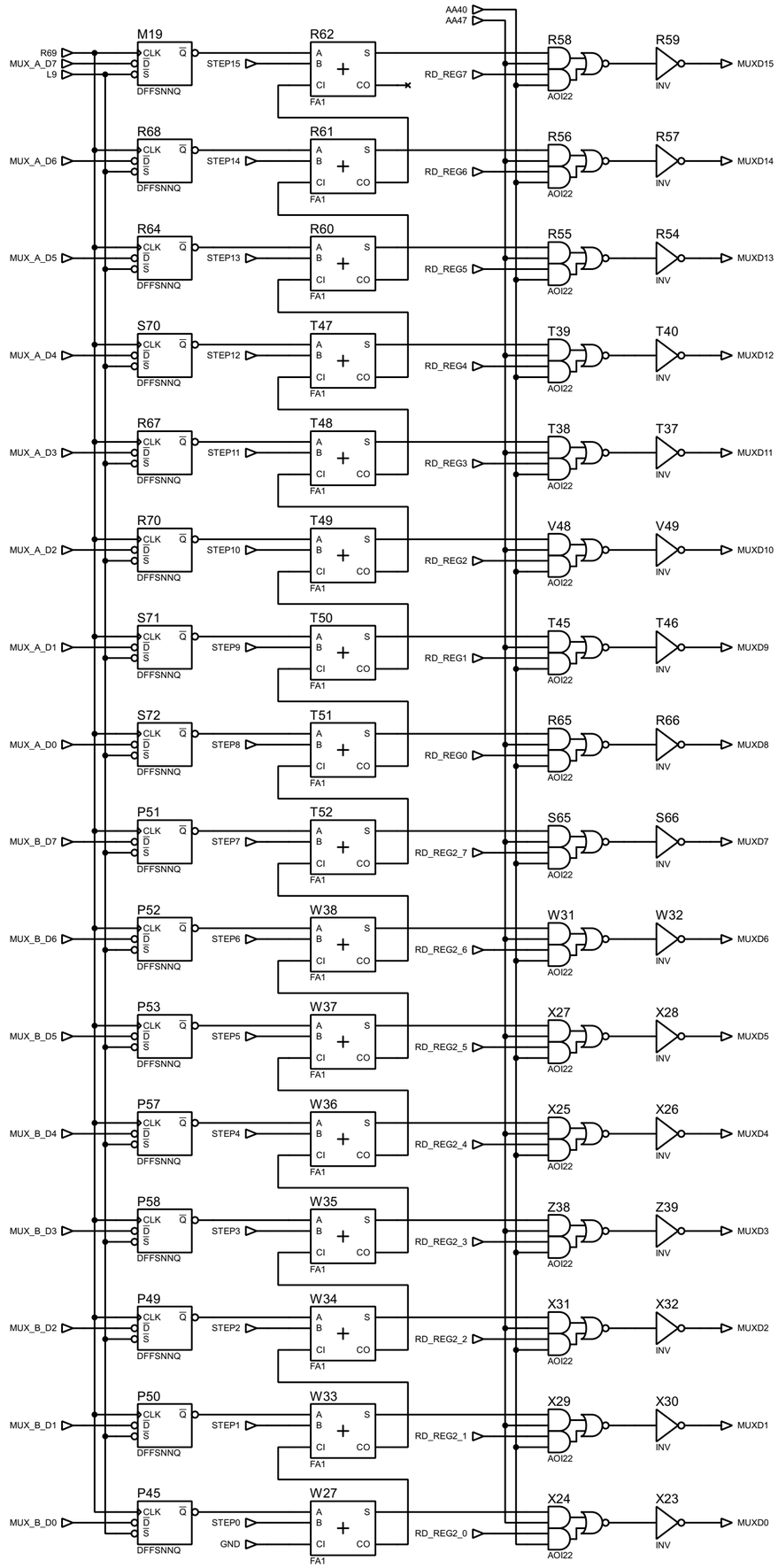

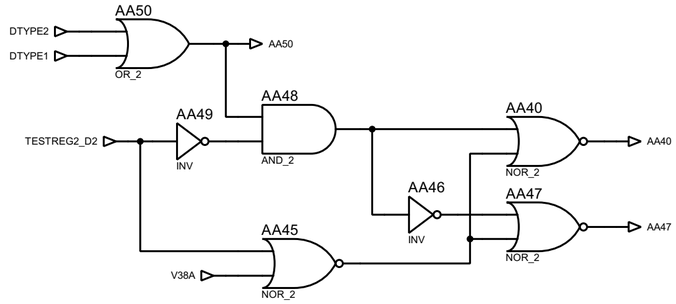

TITLE:	DATE:
Konami 054539 ADDER C - SAMPLE VALUE	10/26/2025
BY: Sean Gonsalves REV: @REV	PAGE: 33/54

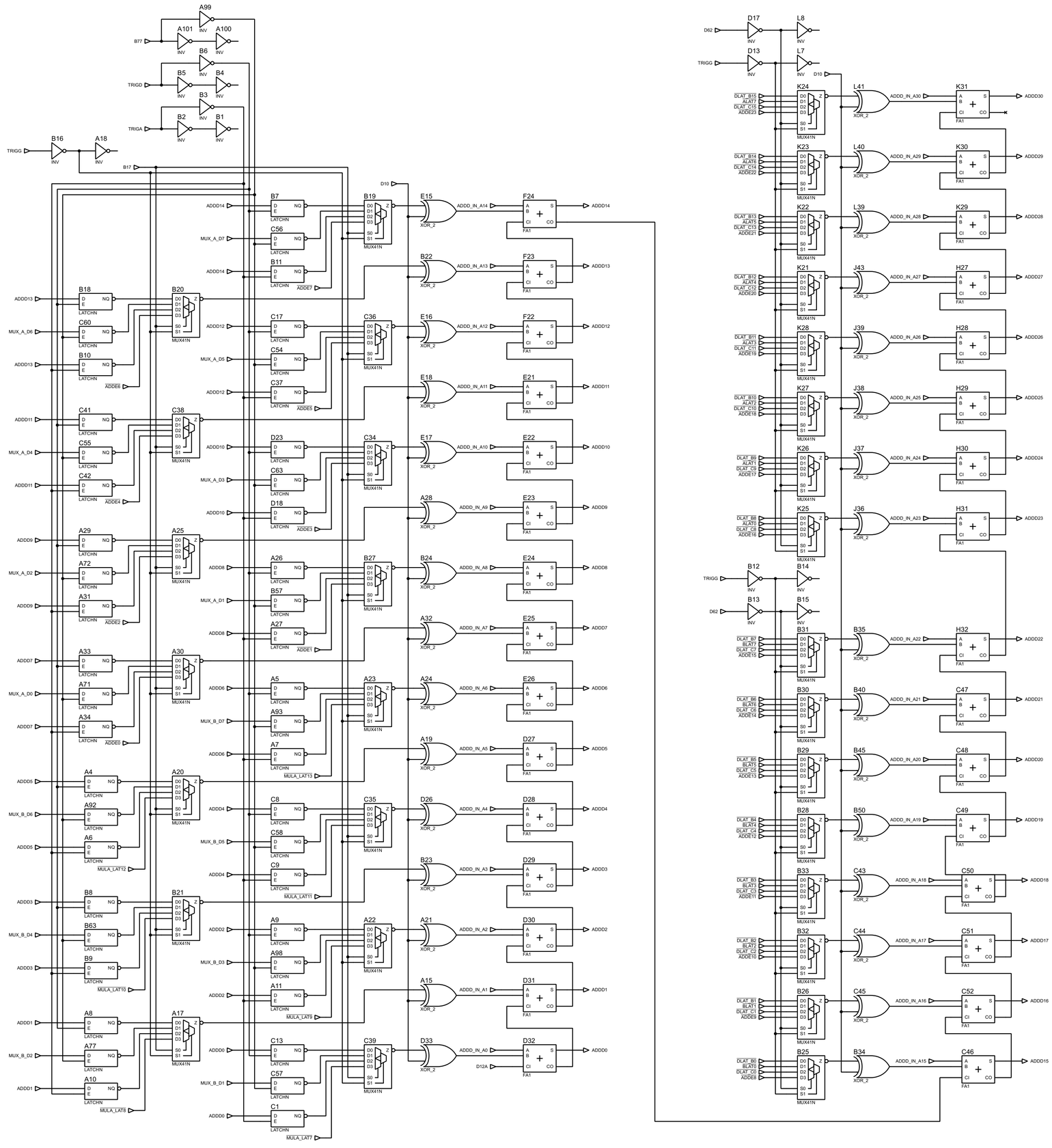

TITLE:	DATE:
Konami 054539 ADDER D	10/26/2025
BY: Sean Gonsalves REV: @REV	PAGE: 34/54

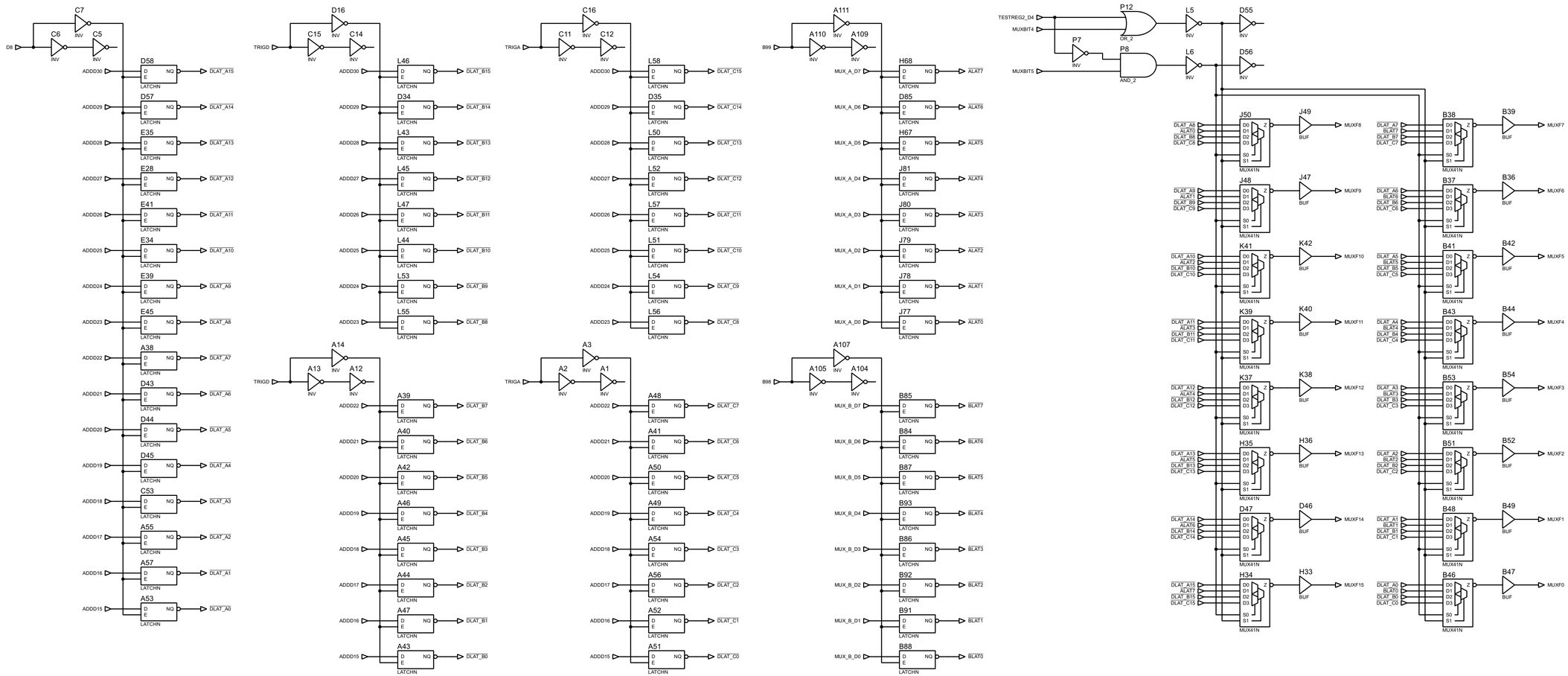

TITLE:	DATE:
Konami 054539 LATCHES AND MUX F	10/26/2025
BY: Sean Gonsalves REV: @REV	PAGE: 35/54

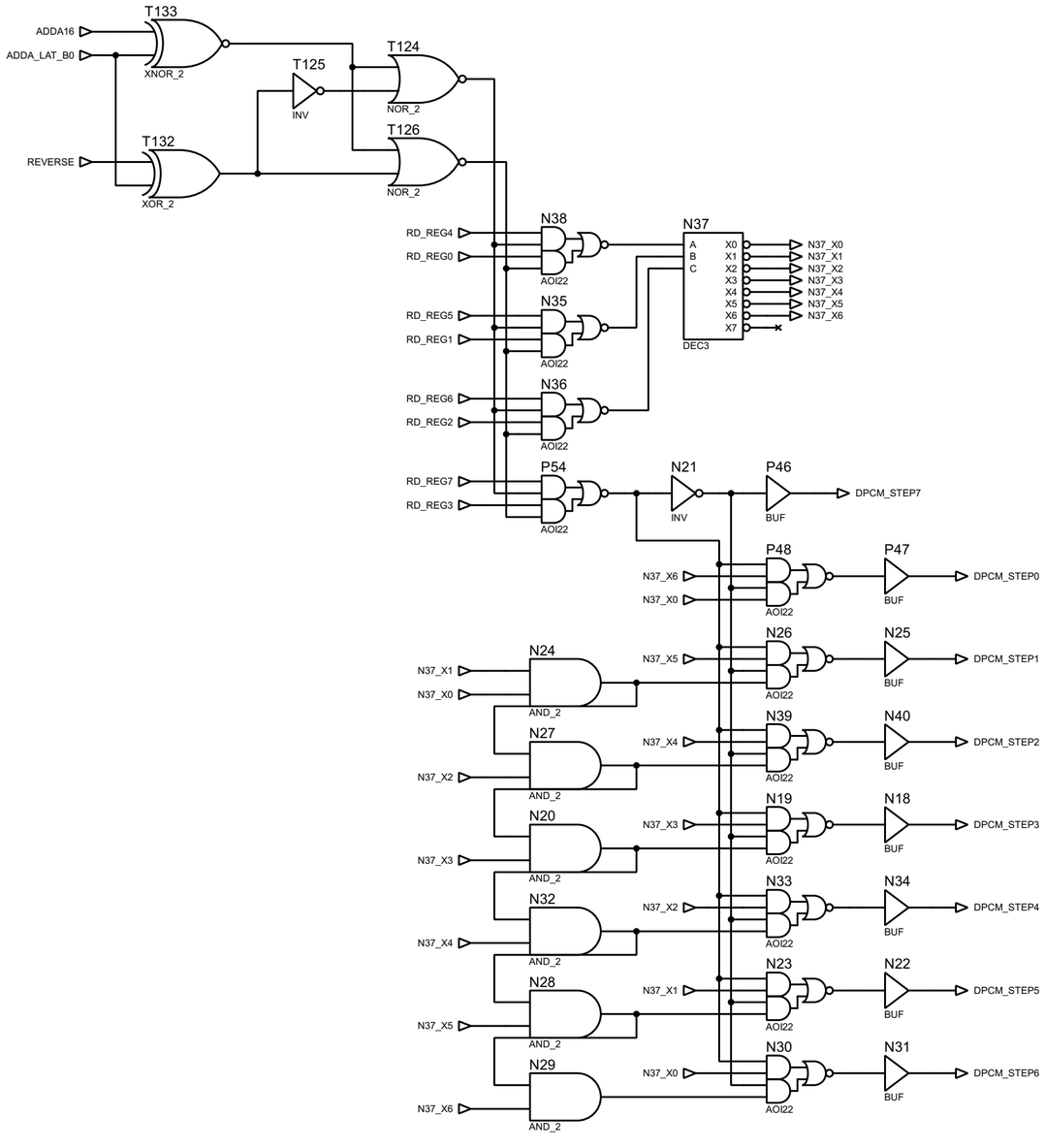

TITLE:	DATE:
Konami 054539 DPCM STEP	10/26/2025
BY: Sean Gonsalves REV: @REV	PAGE: 36/54

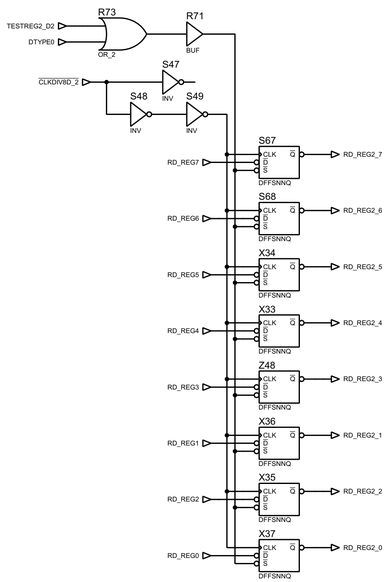

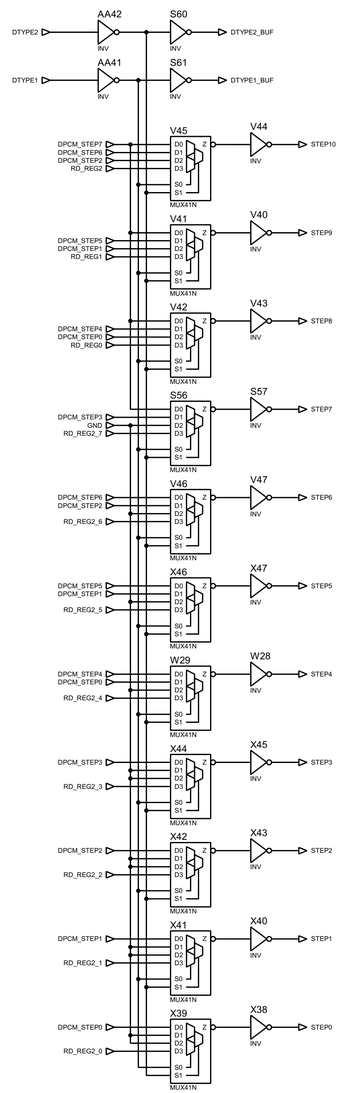

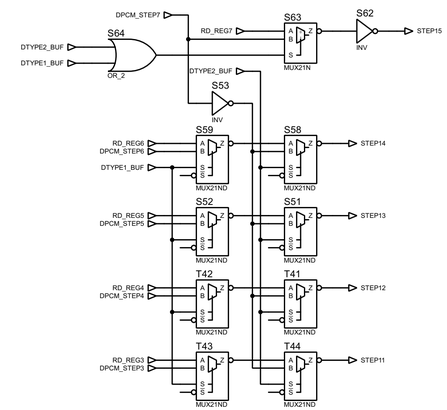

TITLE:	DATE:
Konami 054539 STEP TYPE MUX	10/26/2025
BY: Sean Gonsalves REV: @REV	PAGE: 37/54

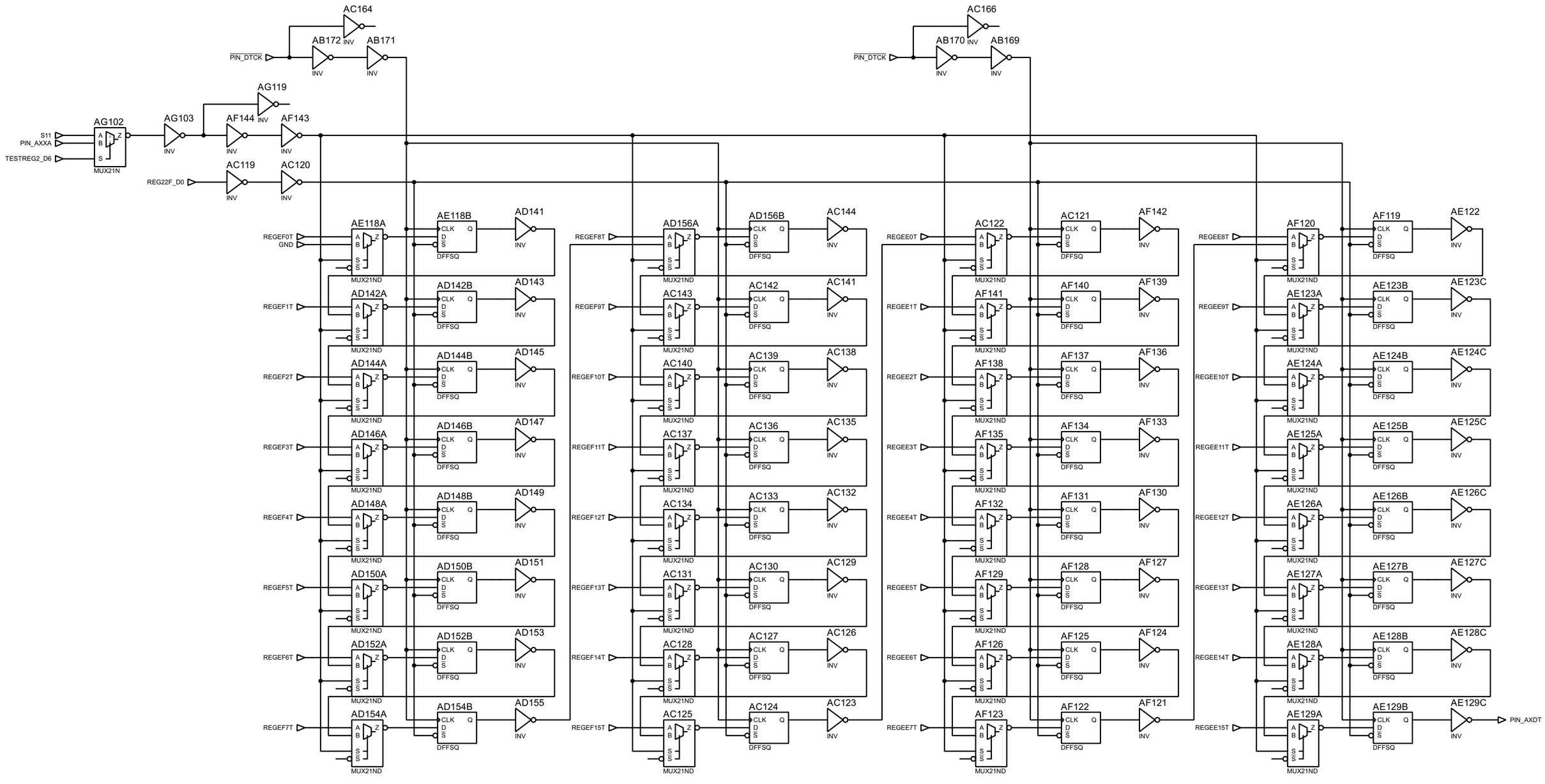

TITLE:	DATE:
Konami 054539 FINAL OUTPUT PISO	10/26/2025
BY: Sean Gonsalves REV: @REV	PAGE: 38/54

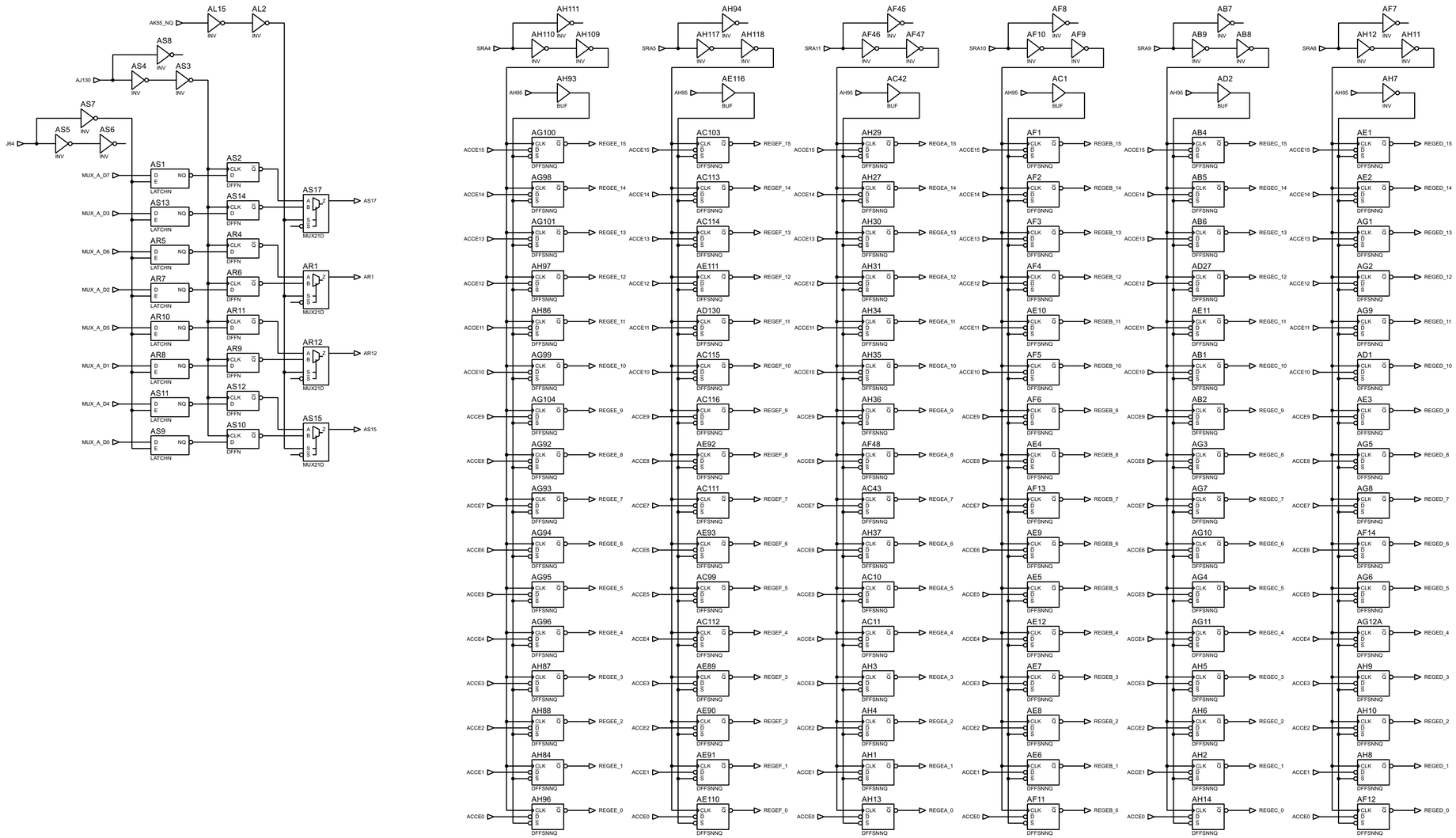

TITLE:	DATE:
Konami 054539 REGISTERS E	10/26/2025
BY: Sean Gonsalves REV: @REV	PAGE: 39/54

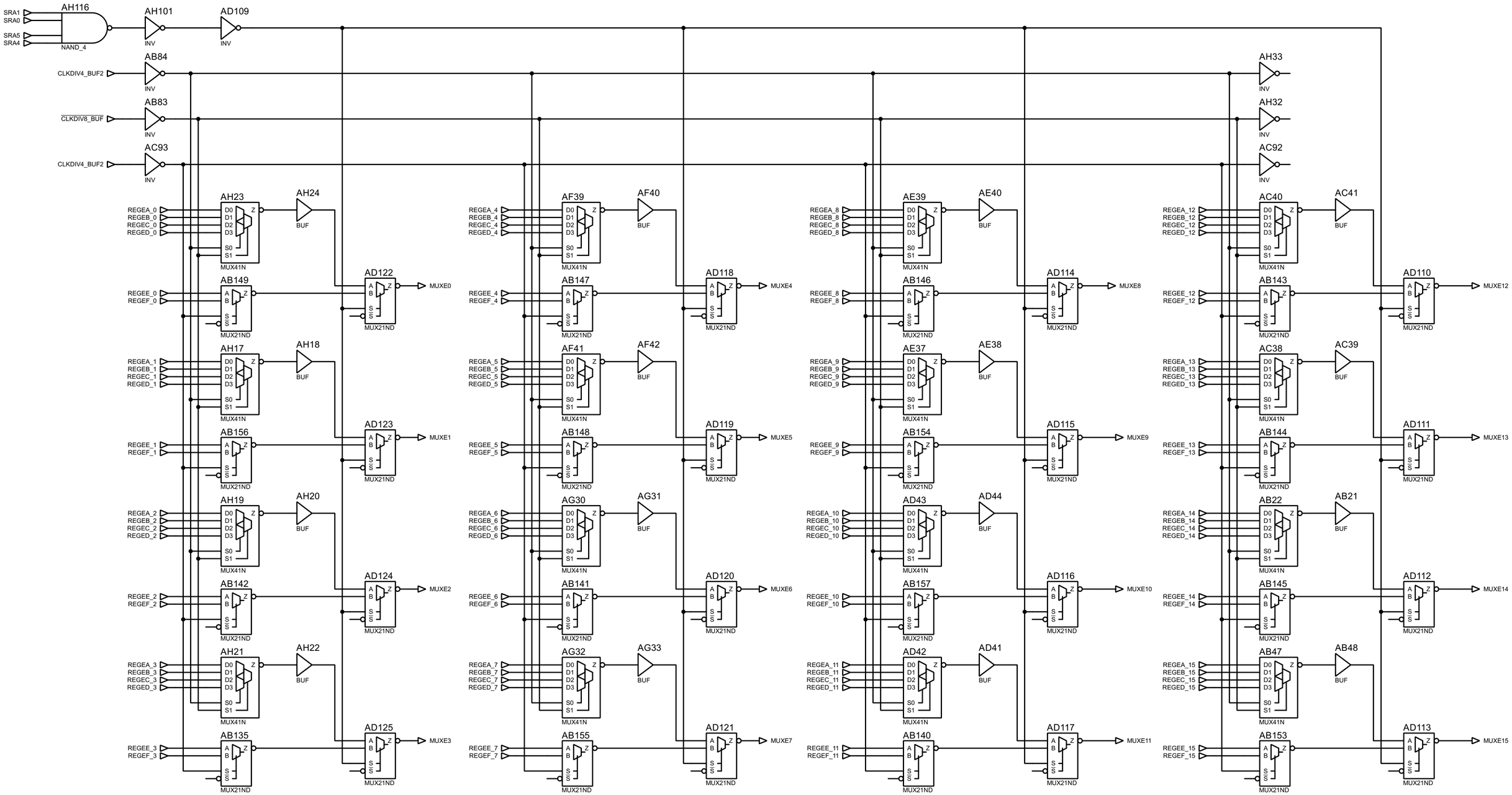

TITLE:	DATE:
Konami 054539 REG E MUX	10/26/2025
BY: Sean Gonsalves REV: @REV	PAGE: 40/54

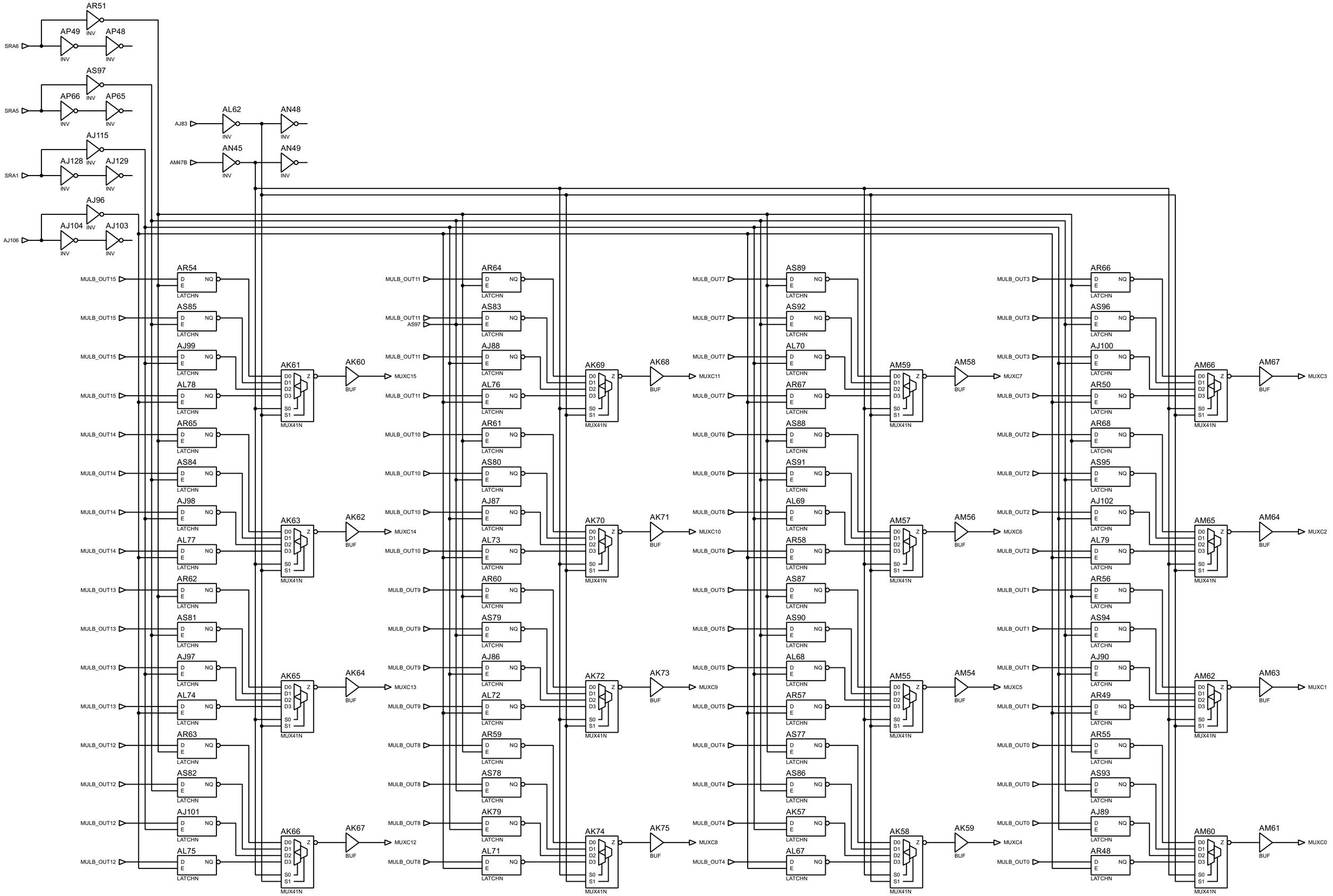

TITLE:	DATE:
Konami 054539 MUX C	10/26/2025
BY: Sean Gonsalves REV: @REV	PAGE: 41/54

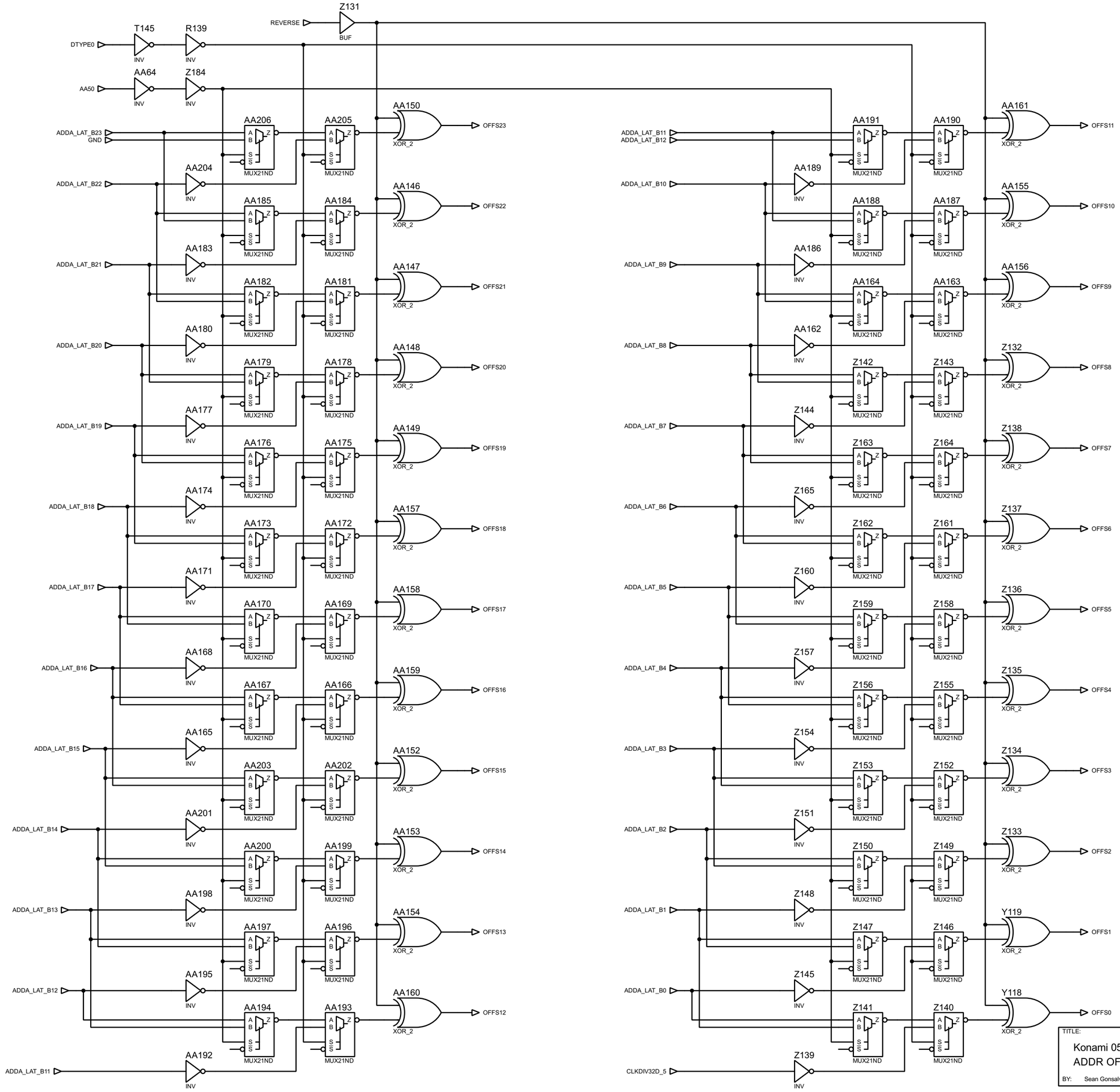

TITLE:	DATE:
Konami 054539 ADDR OFFSET SELECT	10/26/2025
BY: Sean Gonsalves REV: @REV	PAGE: 42/54

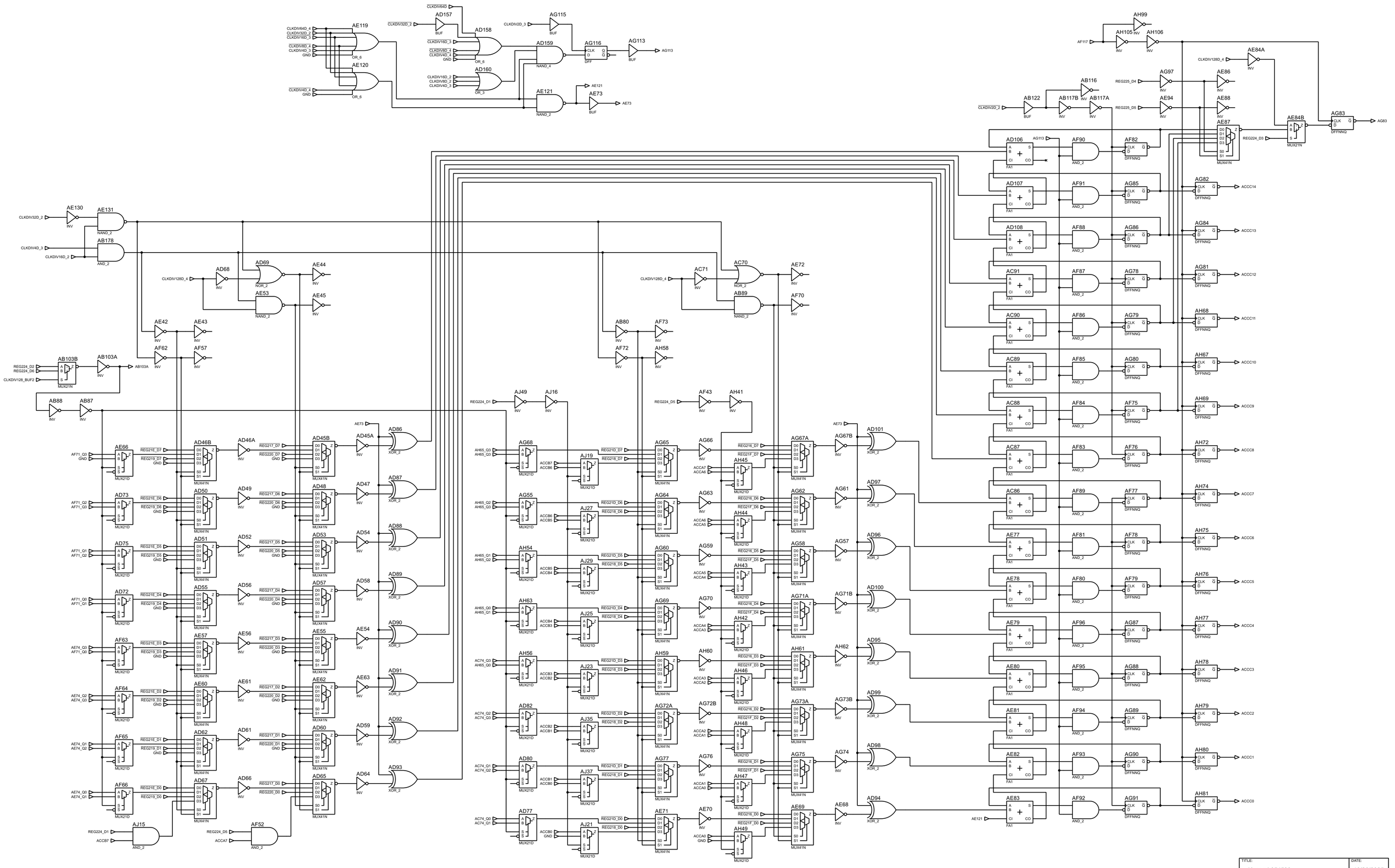

TITLE:	DATE:
Konami 054539 ACC C	10/26/2025
BY: Sean Gonsalves REV: @REV	PAGE: 43/54

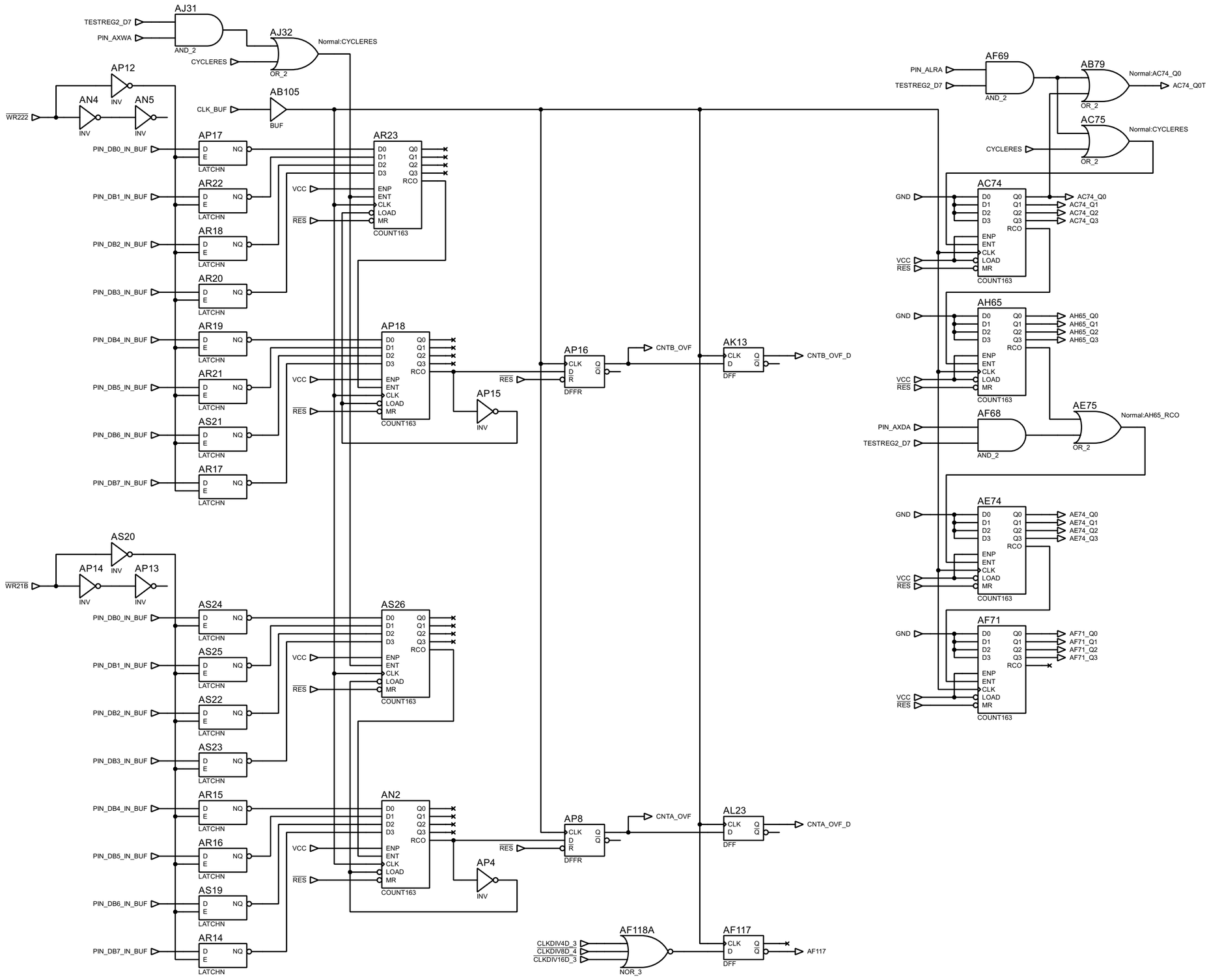

TITLE:	DATE:
Konami 054539 COUNTERS	10/26/2025
BY: Sean Gonsalves REV: @REV	PAGE: 44/54

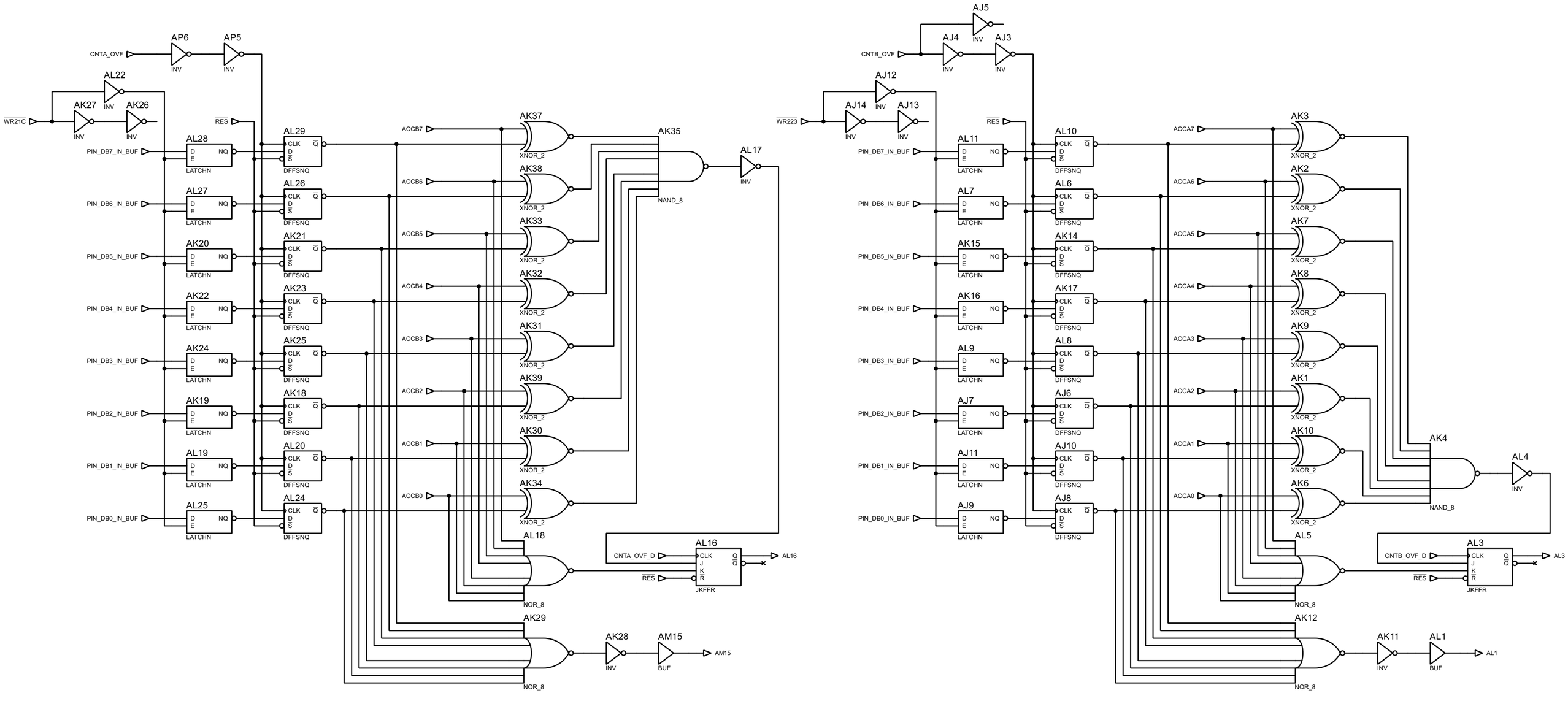

TITLE:	DATE:
Konami 054539 COMPARATORS	10/26/2025
BY: Sean Gonsalves REV: @REV	PAGE: 45/54

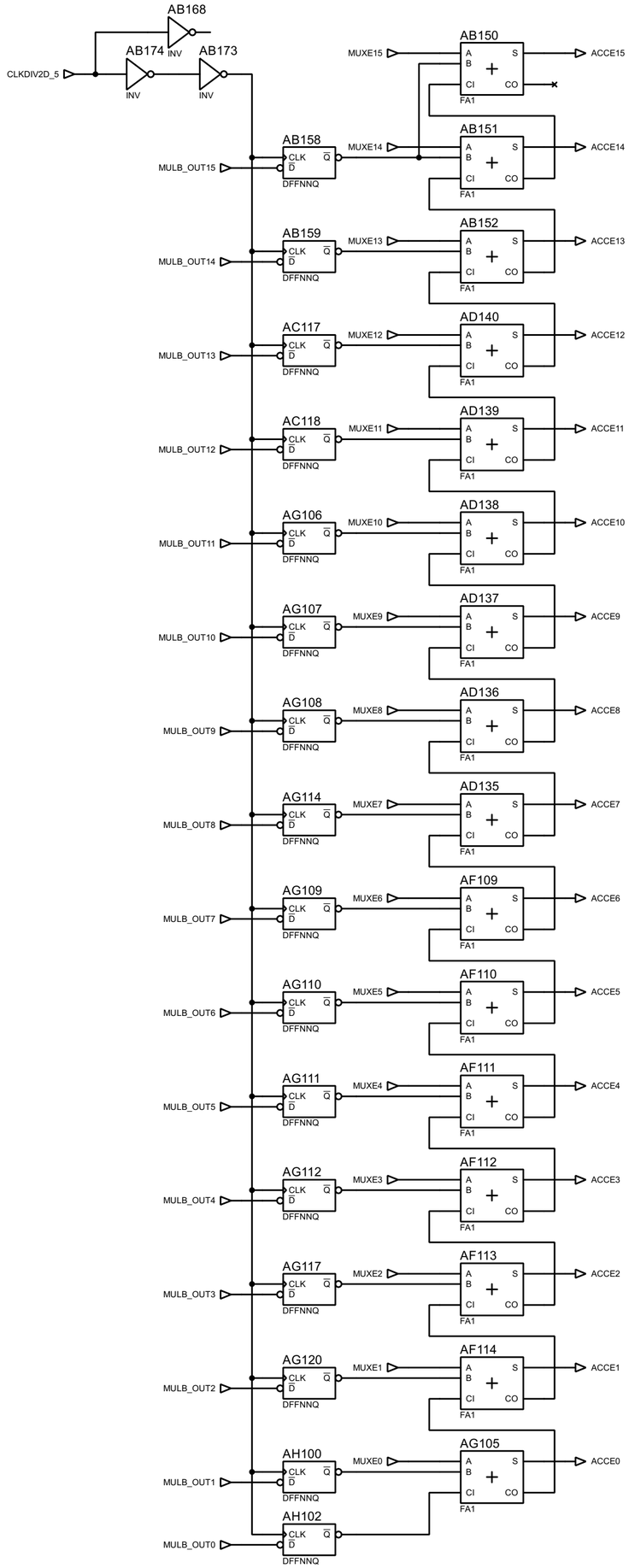

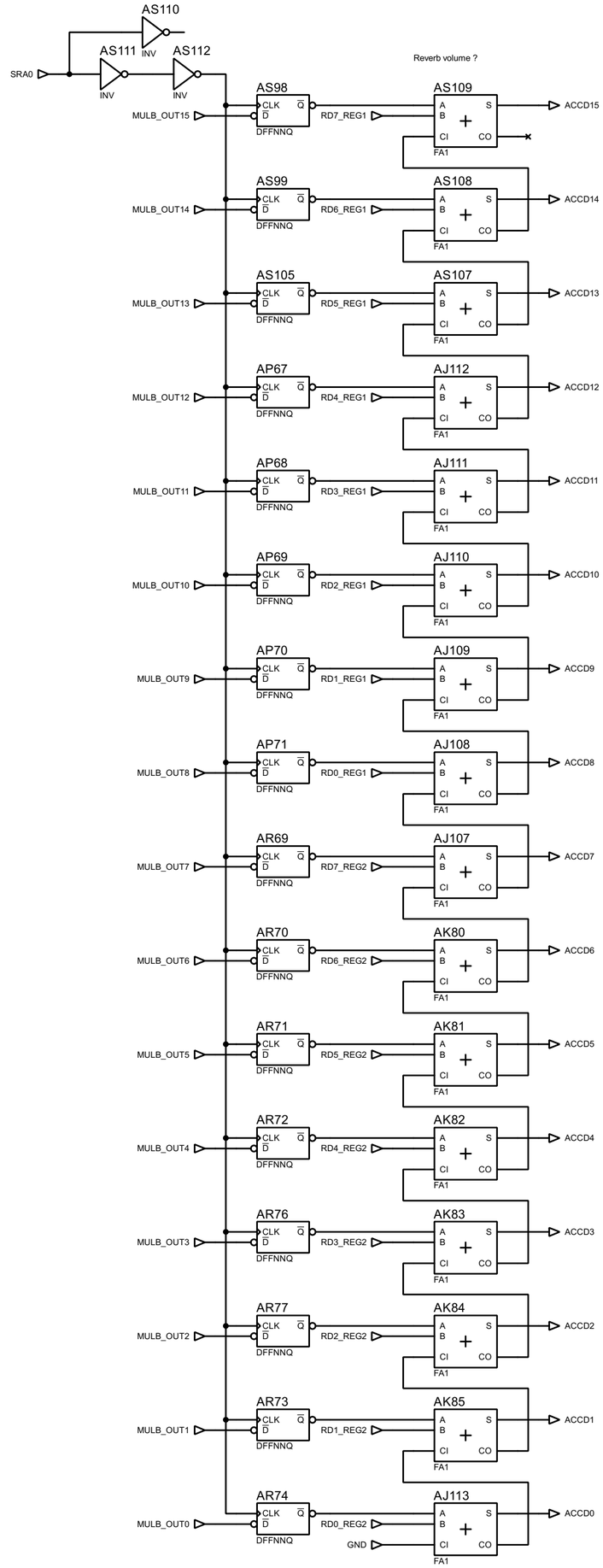

TITLE:	DATE:
Konami 054539 MULB ACCs	10/26/2025
BY: Sean Gonsalves REV: @REV	PAGE: 46/54

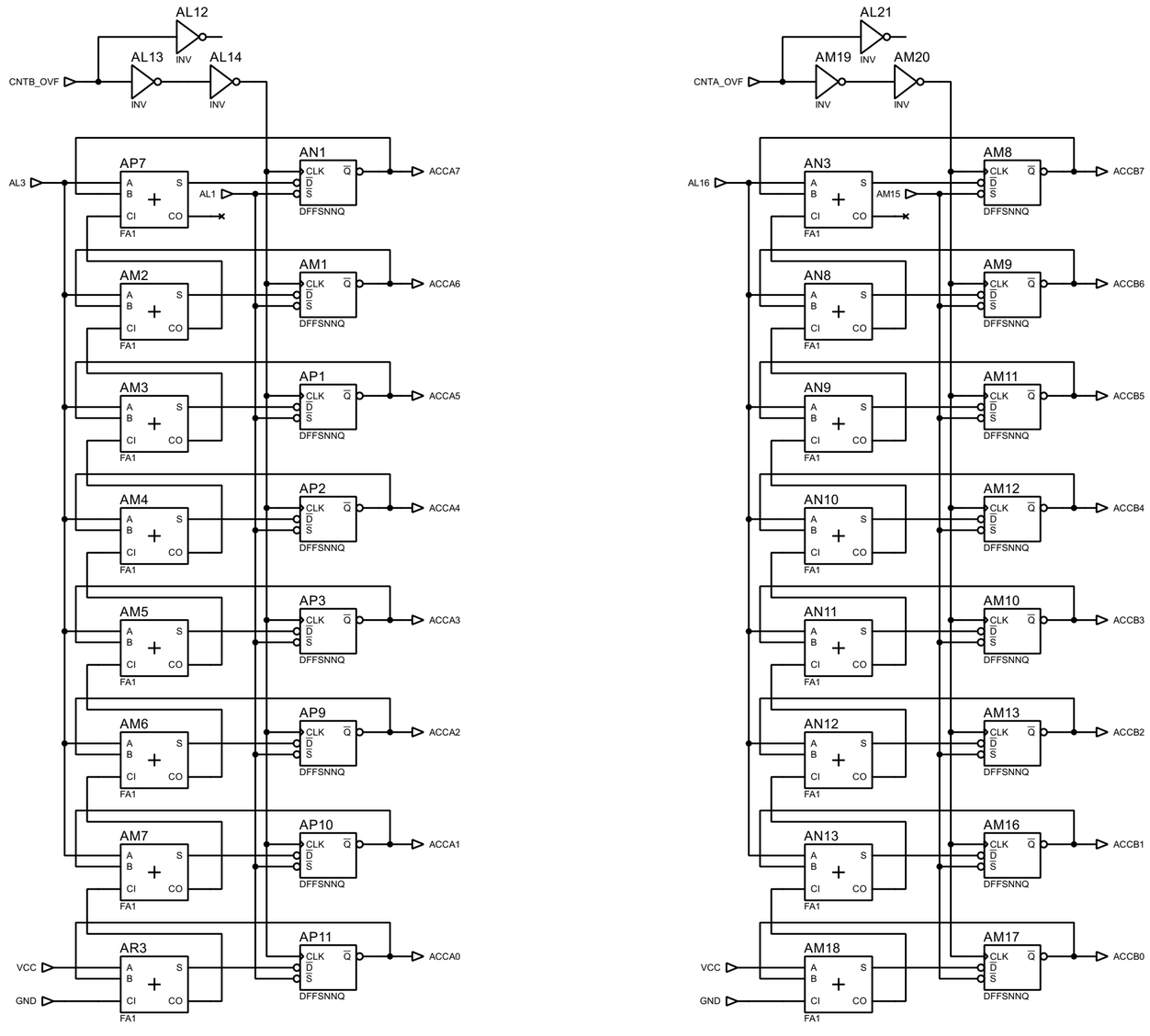

TITLE:	DATE:
Konami 054539 ACC A and B	10/26/2025
BY: Sean Gonsalves REV: @REV	PAGE: 47/54

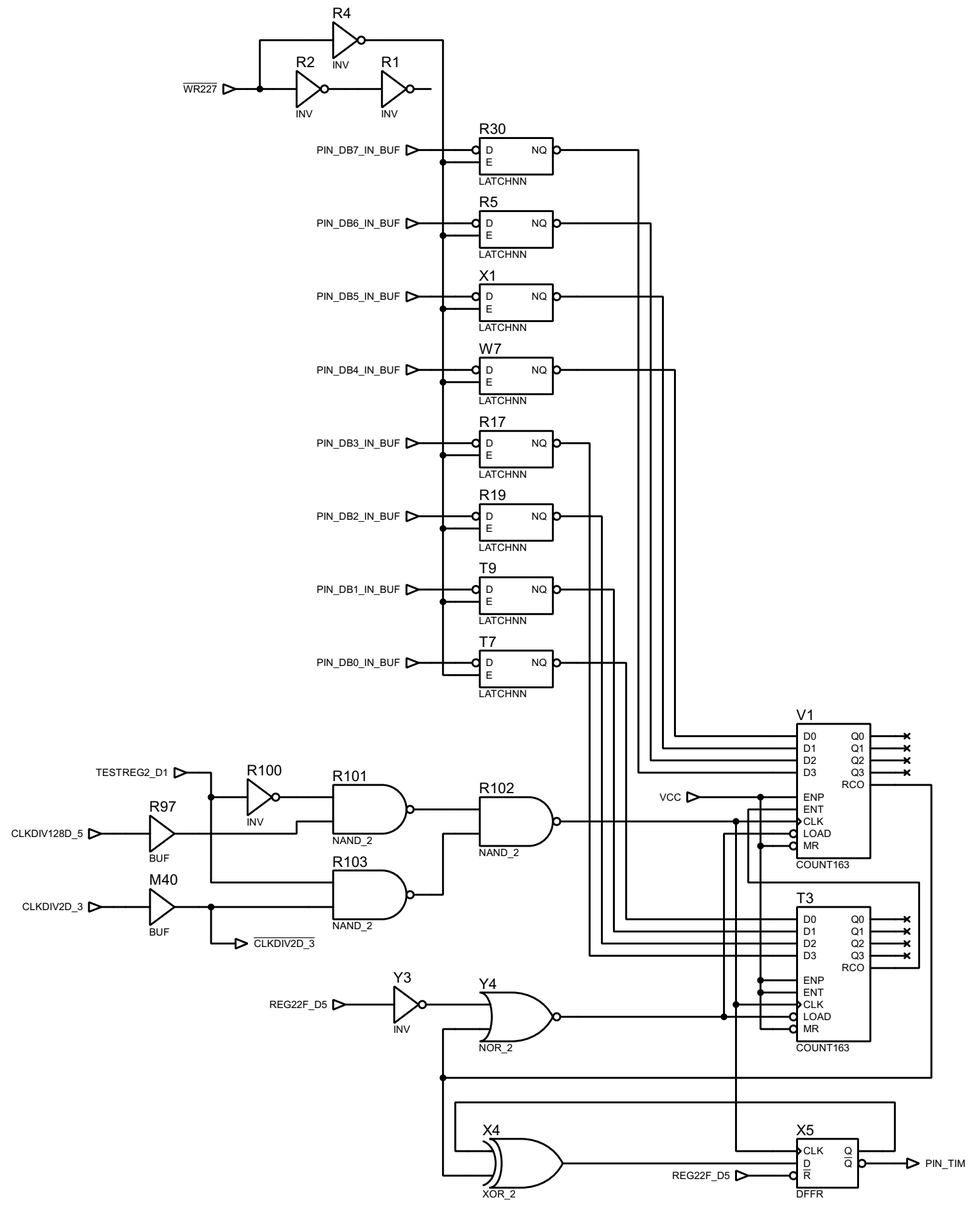

TITLE:	DATE:
Konami 054539 TIMER	10/26/2025
BY: Sean Gonsalves REV: @REV	PAGE: 48/54

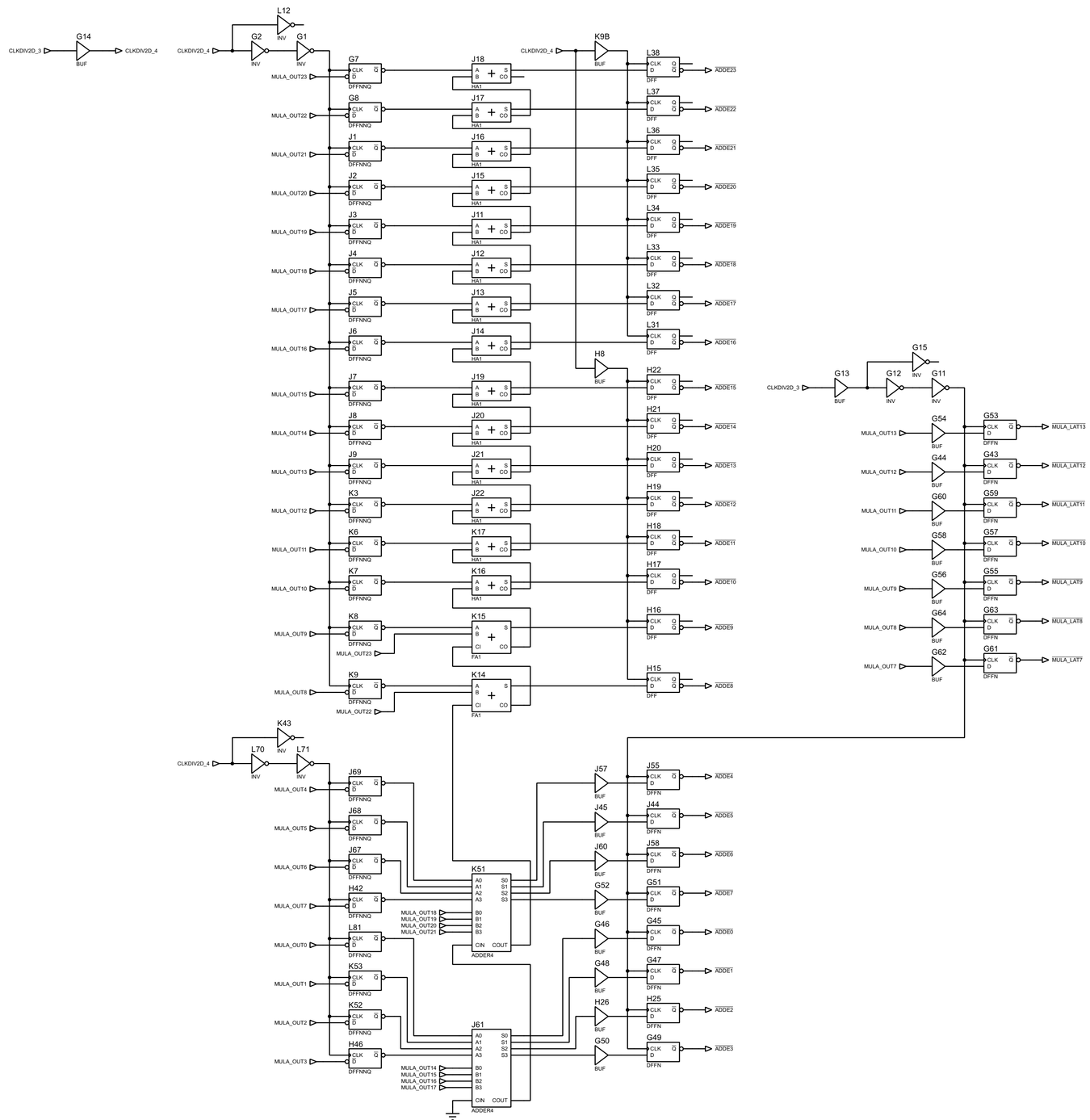

TITLE:	DATE:
Konami 054539 ADDER E	10/26/2025
BY: Sean Gonsalves REV: @REV	PAGE: 49/54

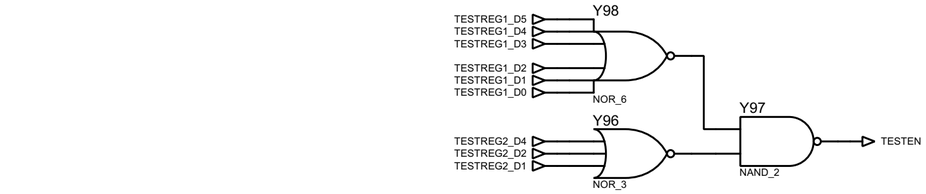

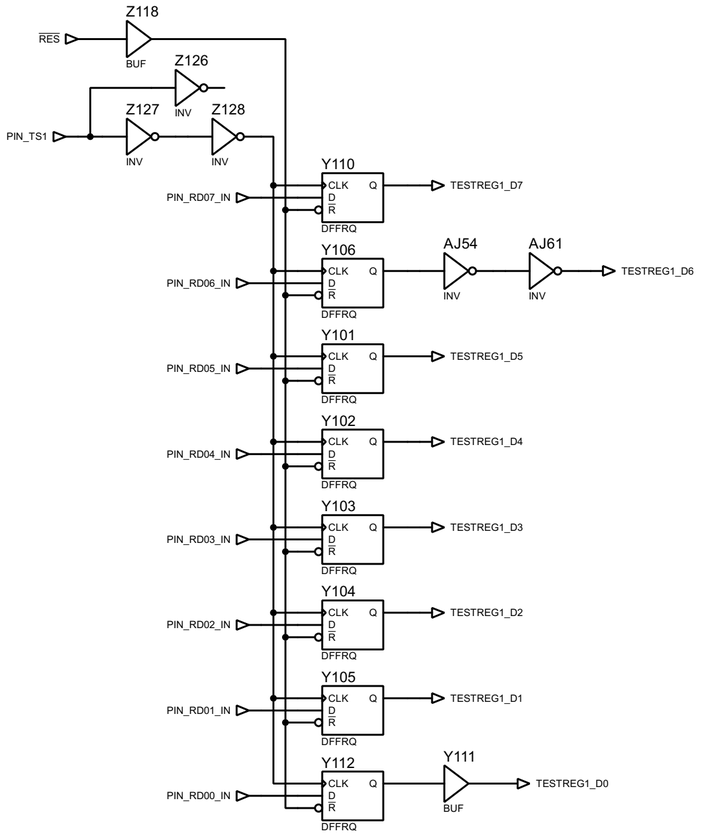

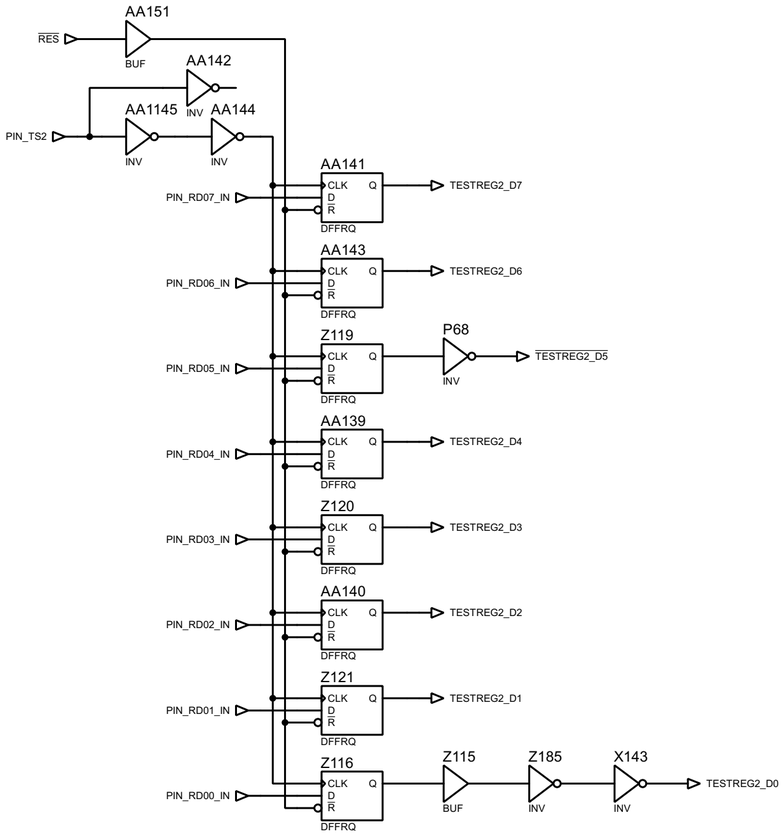

TITLE:	DATE:
Konami 054539 TEST REGISTERS	10/26/2025
BY: Sean Gonsalves REV: @REV	PAGE: 50/54

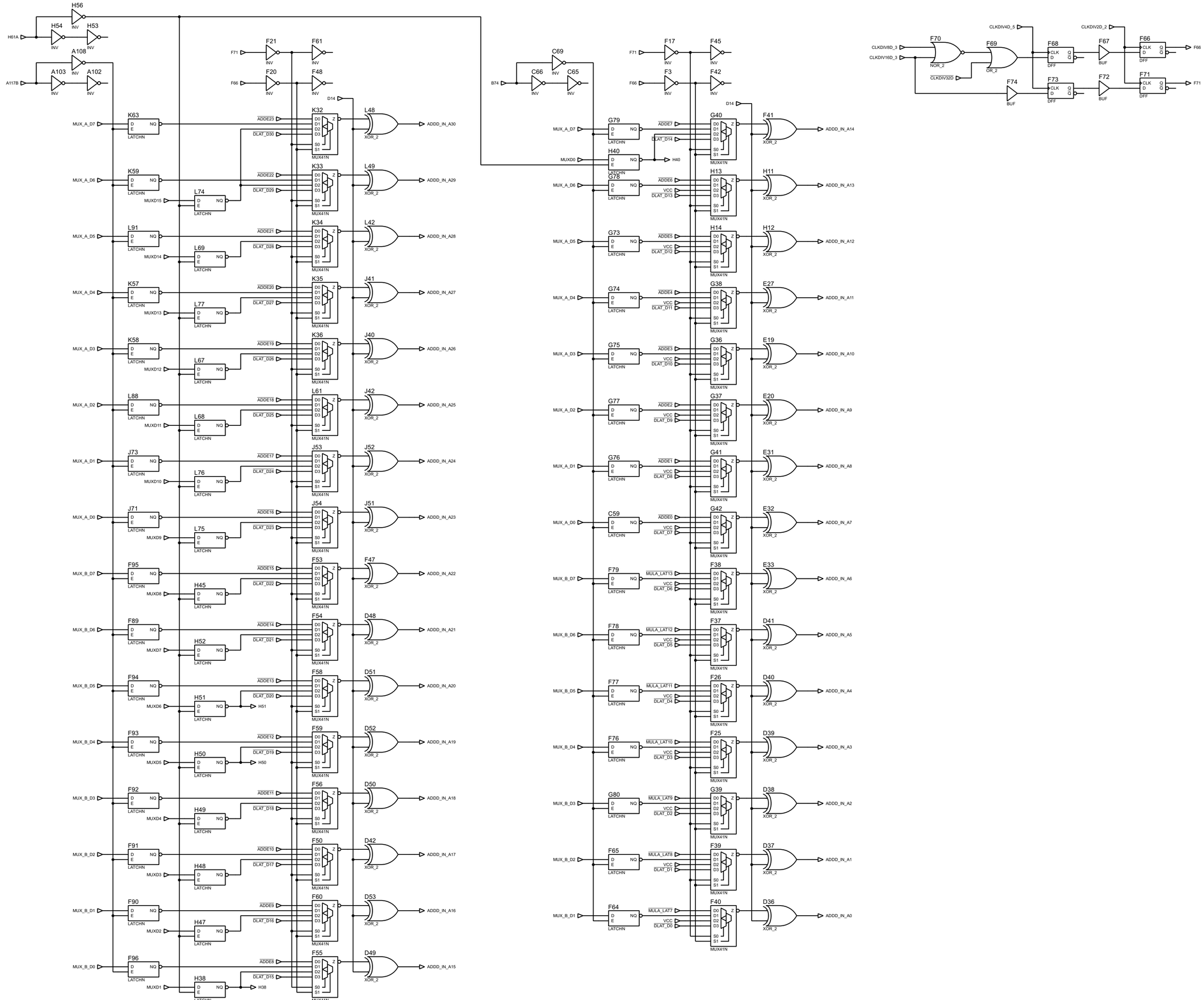

TITLE:	DATE:
Konami 054539	10/26/2025
	PAGE:
BY: Sean Gonsalves REV: @REV	51/54

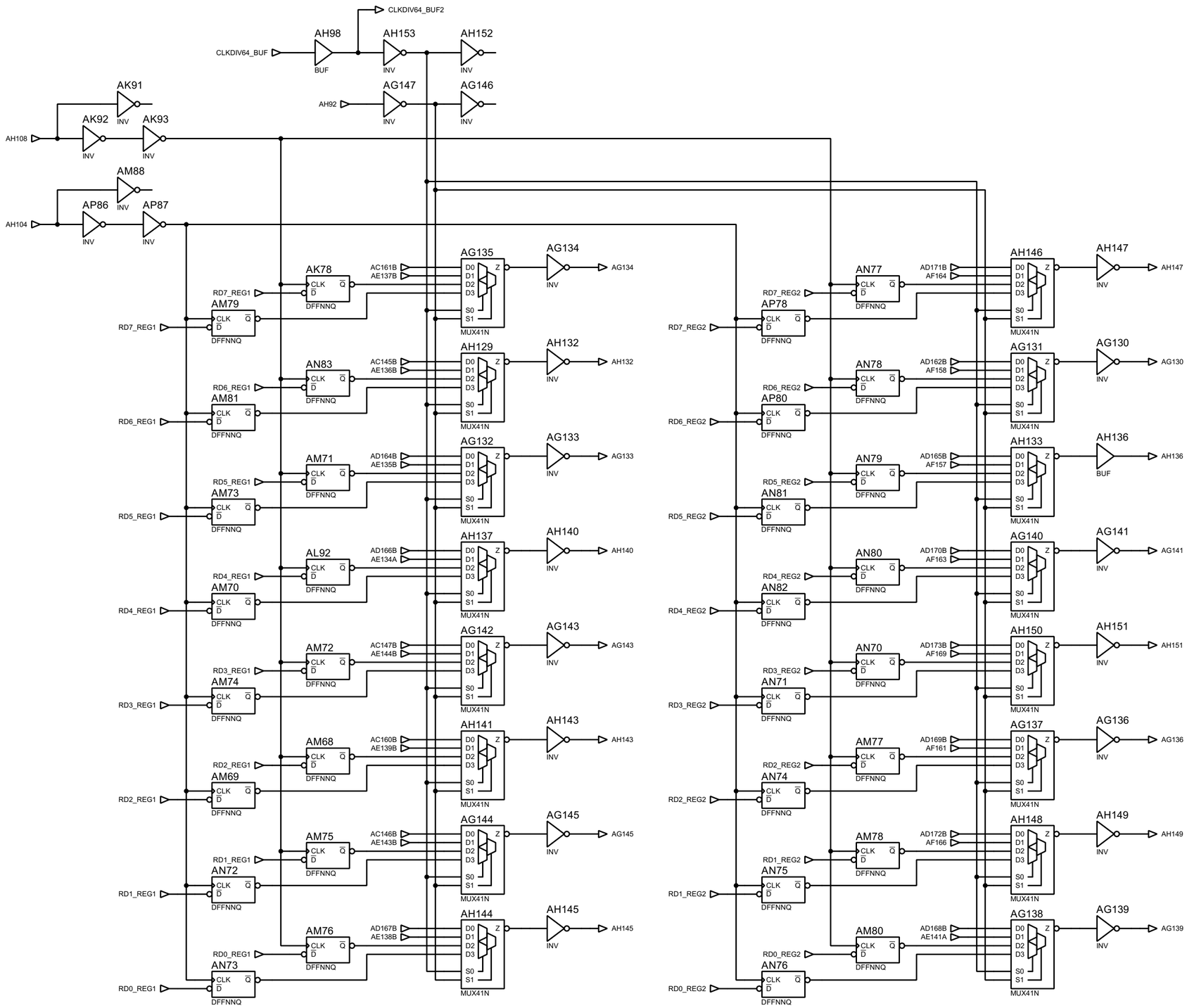

TITLE:	DATE:
Konami 054539	10/26/2025
BY: Sean Gonsalves REV: @REV	PAGE: 52/54

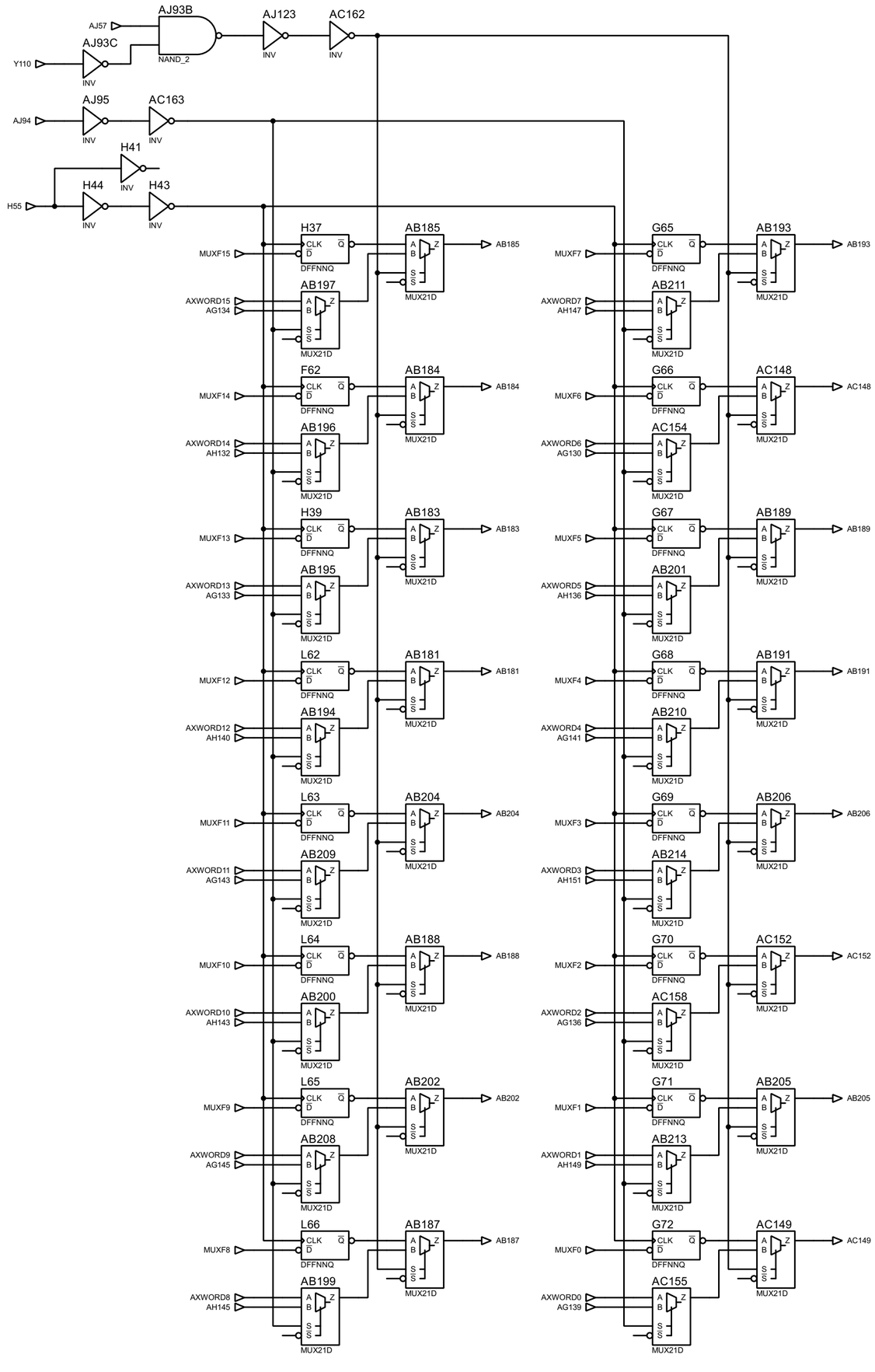

TITLE:	DATE:
Konami 054539	10/26/2025
	PAGE:
BY: Sean Gonsalves REV: @REV	53/54

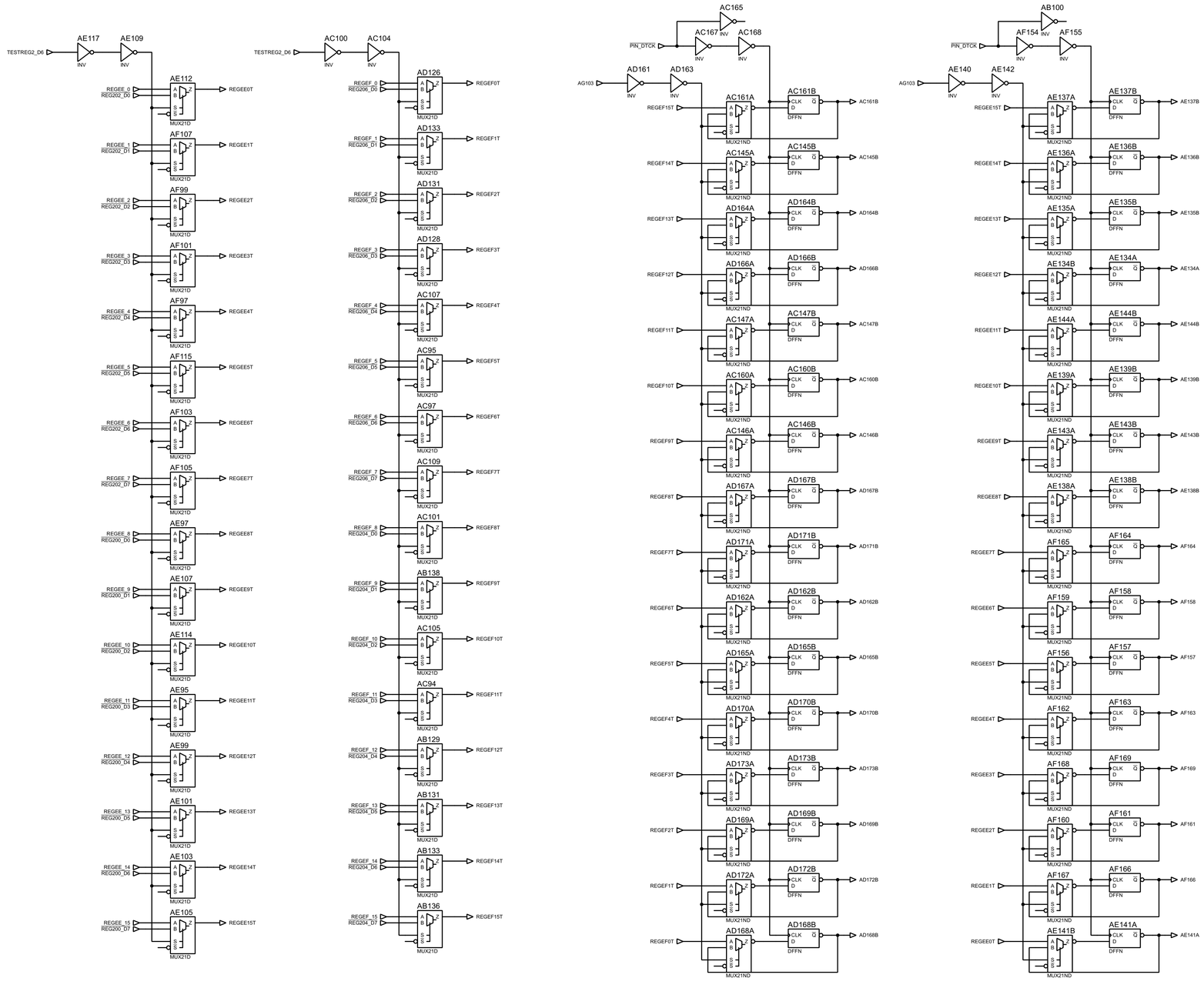

TITLE:	DATE:
Konami 054539	10/26/2025
BY: Sean Gonsalves REV: @REV	PAGE: 54/54