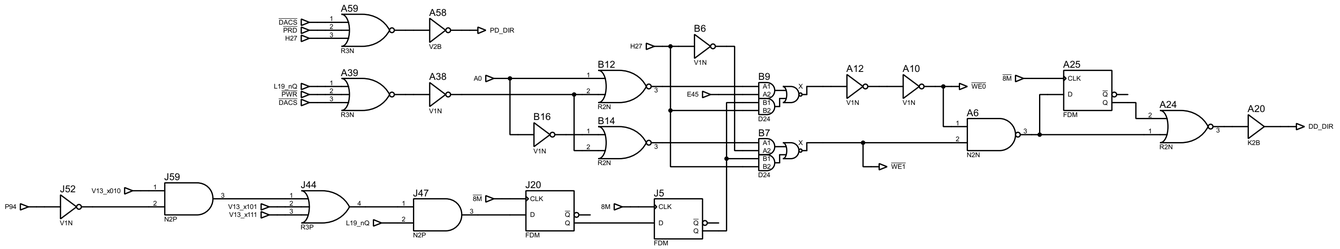

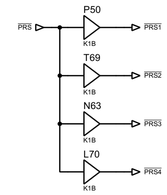

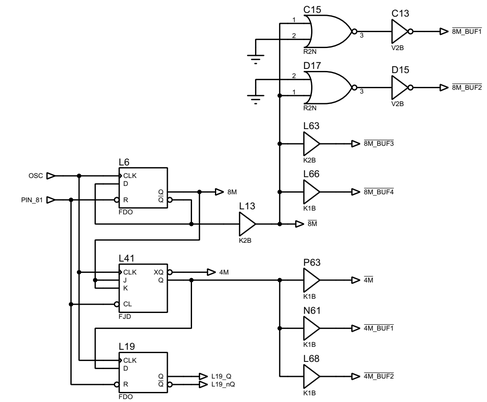

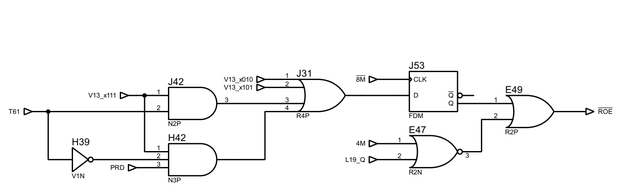

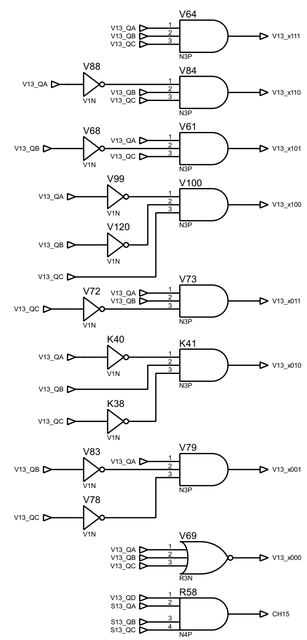

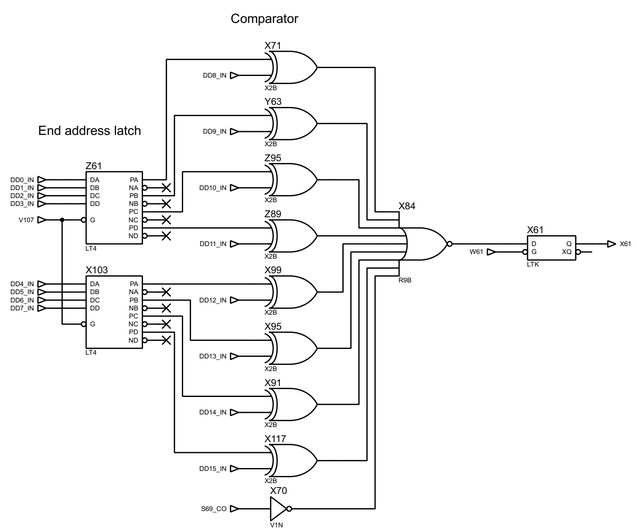

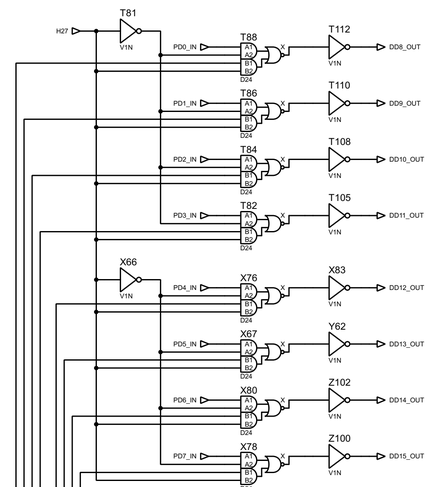

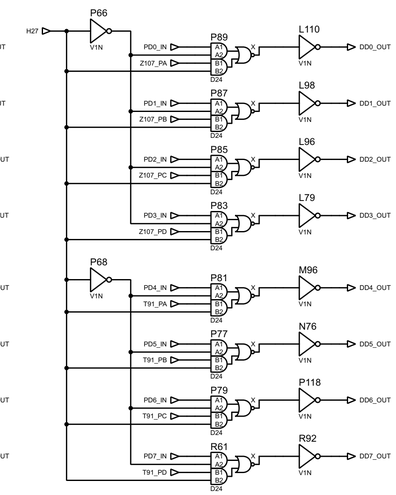

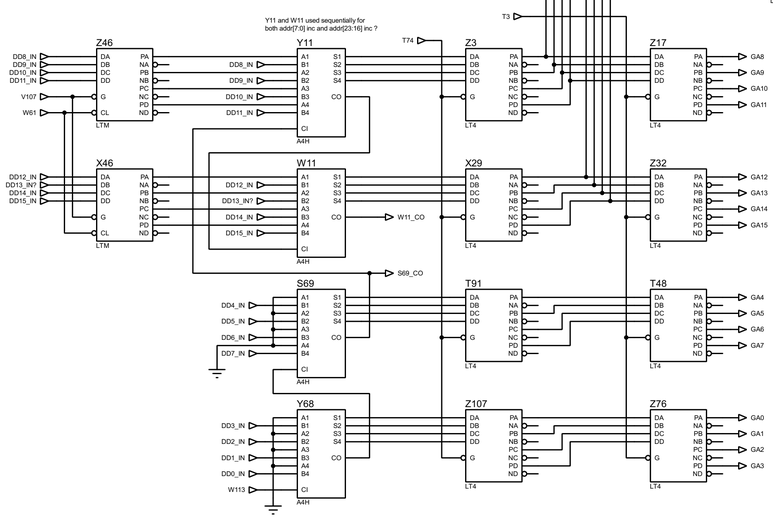

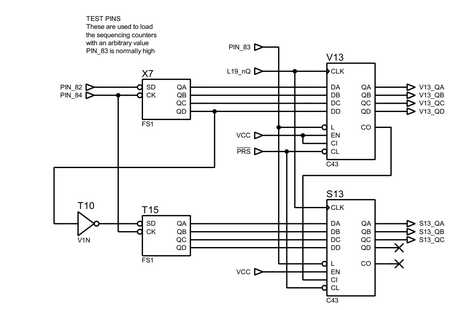

TITLE:	DATE:
Sega 315-5218	22/08/2022
BY: Sean Gonsalves REV: A	PAGE: 1/4

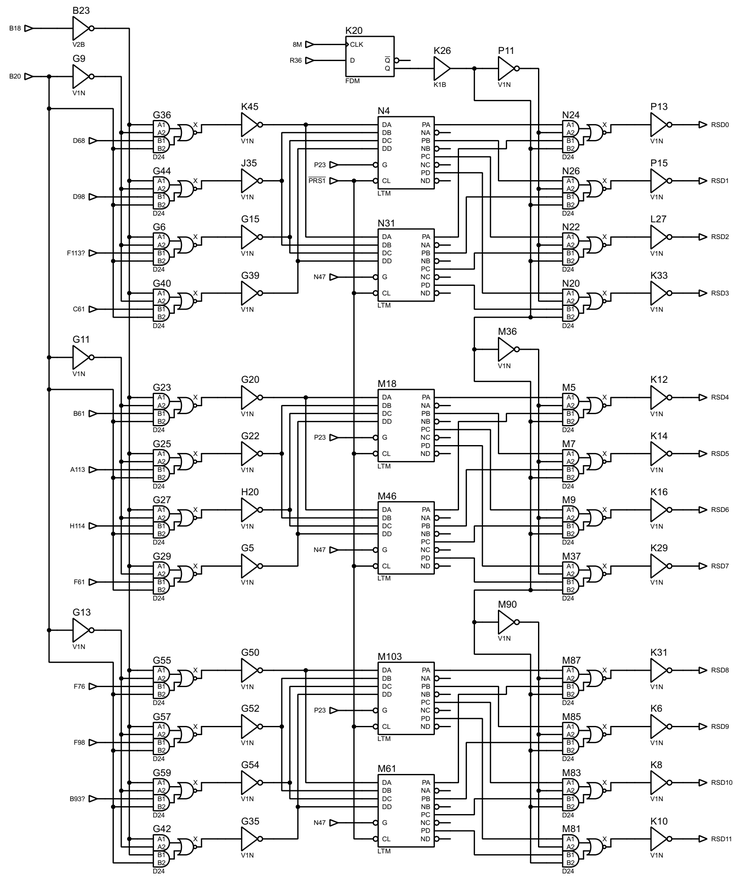

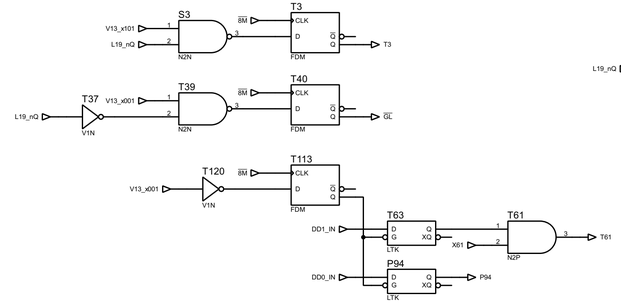

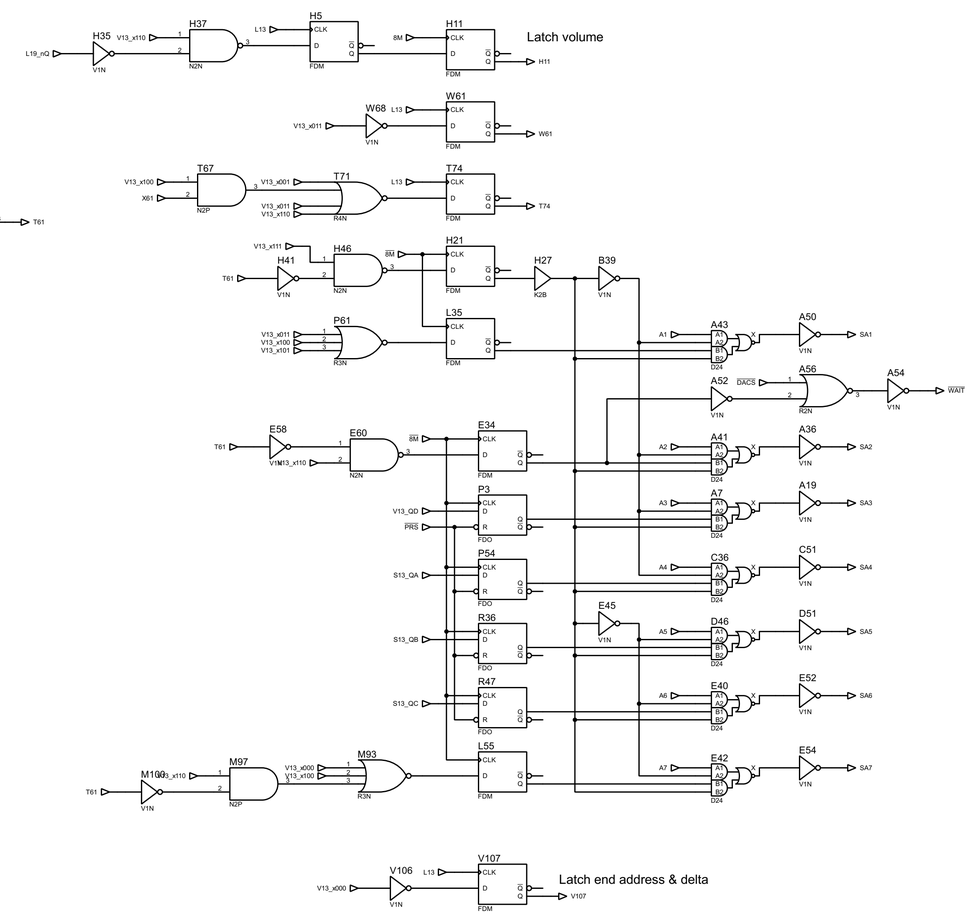

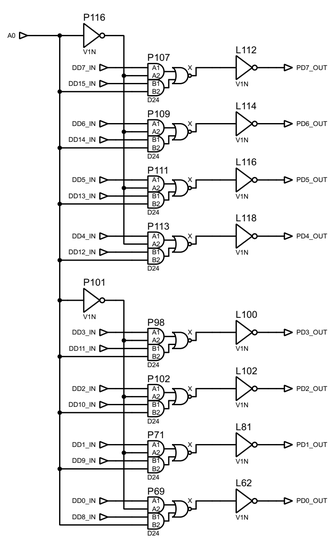

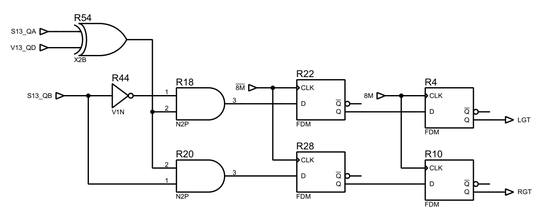

Min/max cap

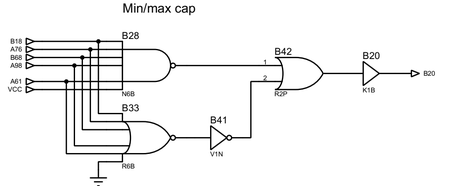

Counter to address LSB carry

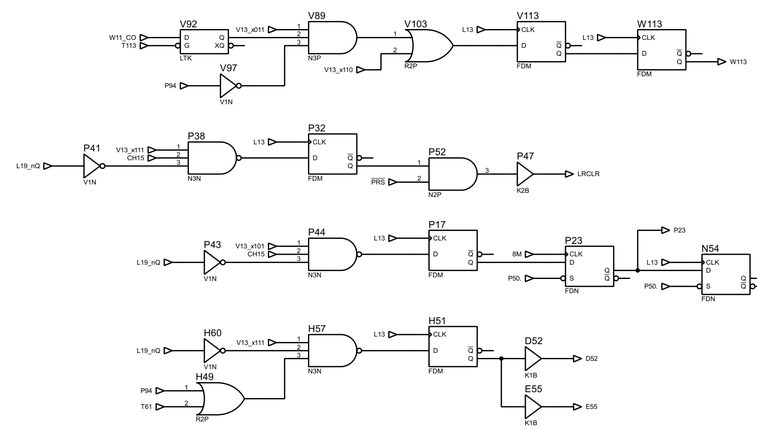

Latch end address & delta

TITLE: Sega 315-5218	DATE: 22/08/2022
BY: Sean Gonsalves REV: A	PAGE: 2/4

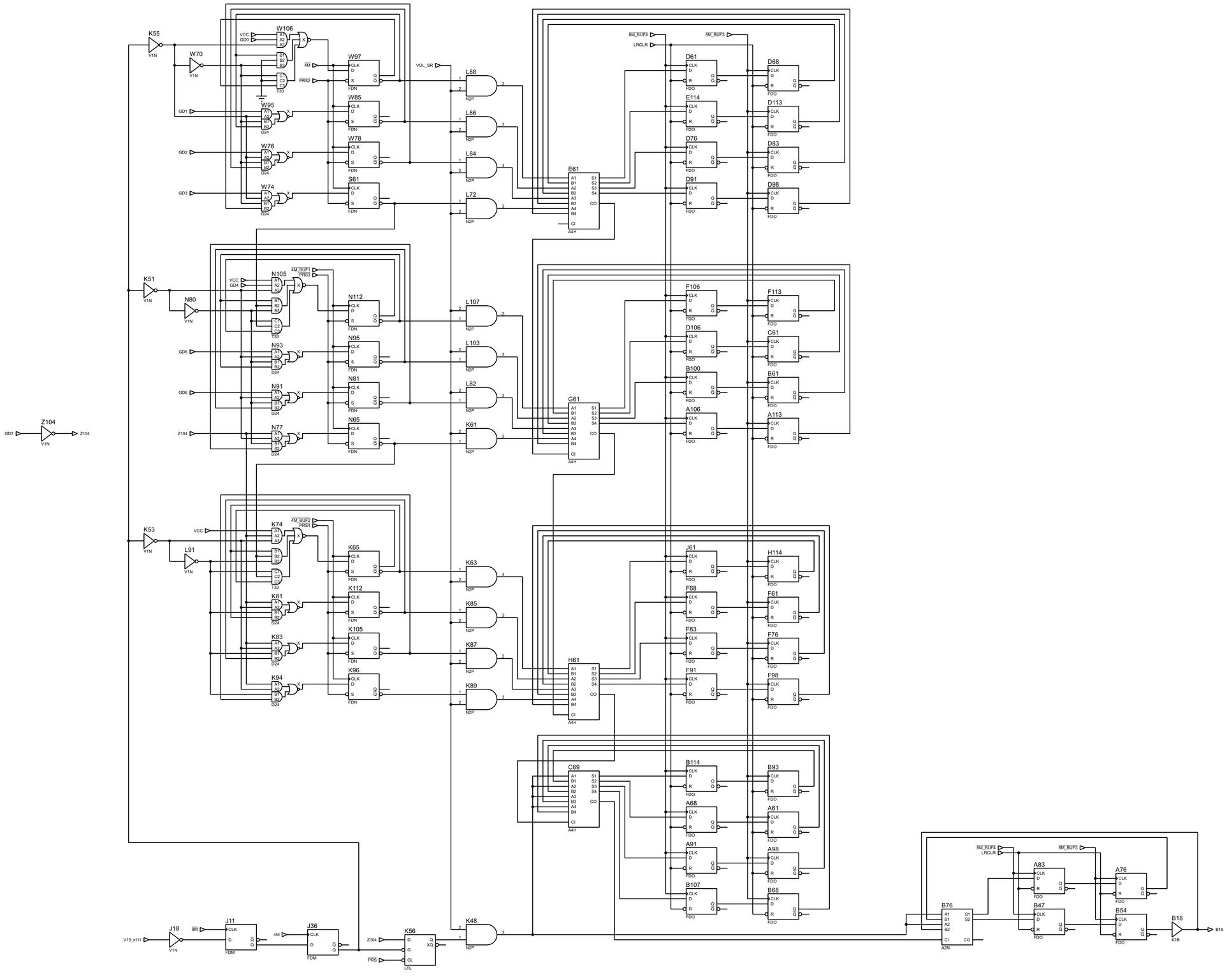

TITLE:	DATE:
Sega 315-5218	22/08/2022
BY: Sean Gonsalves REV: A	PAGE: 3/4

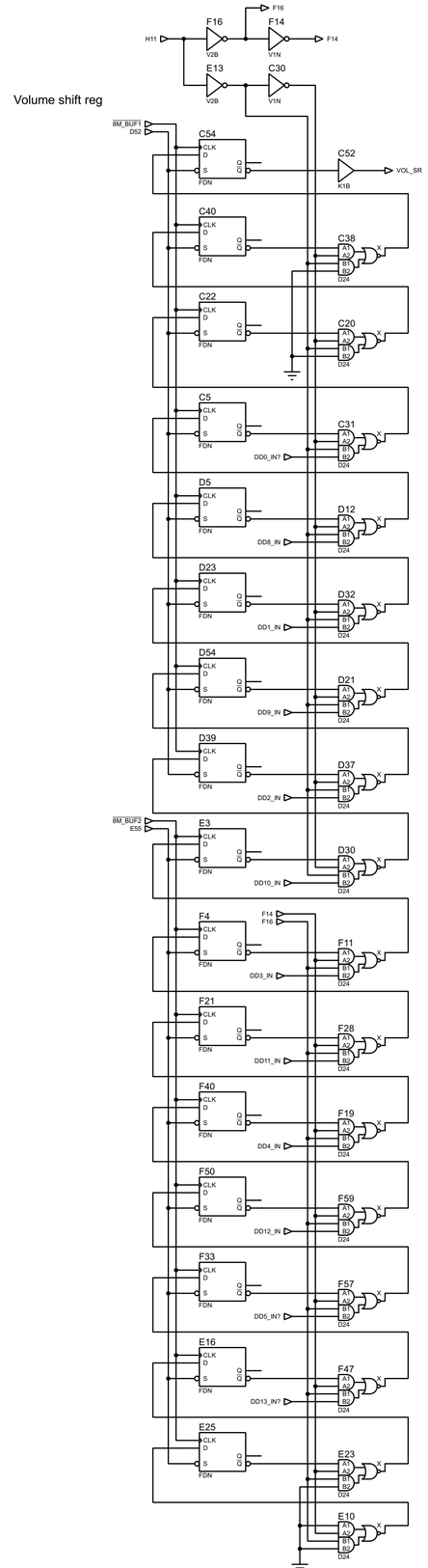

TITLE:	DATE:
Sega 315-5218	22/08/2022
BY: Sean Gonsalves REV: A	PAGE: 4/4