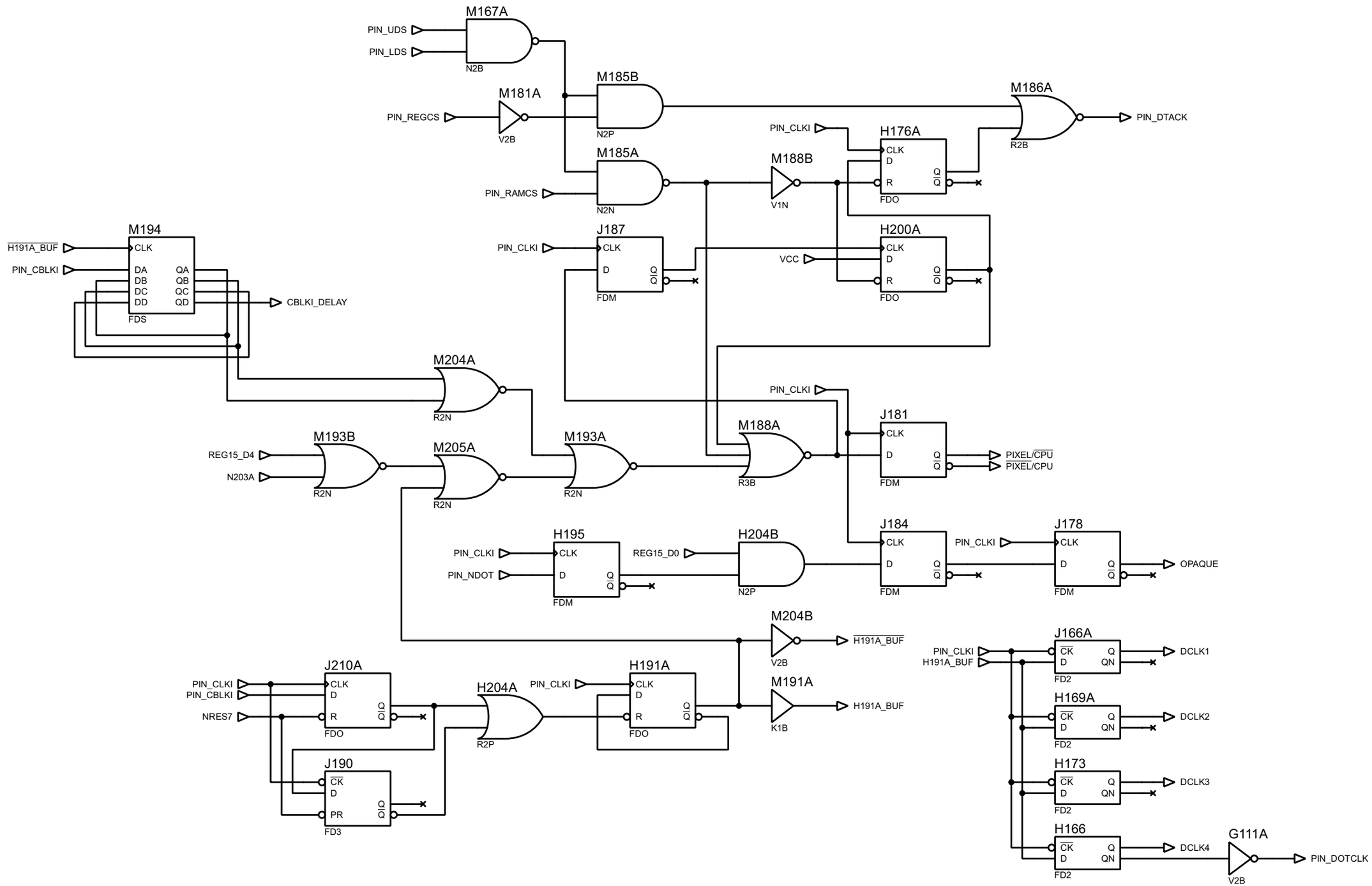

TITLE:	DATE:
Konami 054338 SEQUENCING	8/1/2026
BY: Sean Gonsalves REV: A	PAGE: 1/8

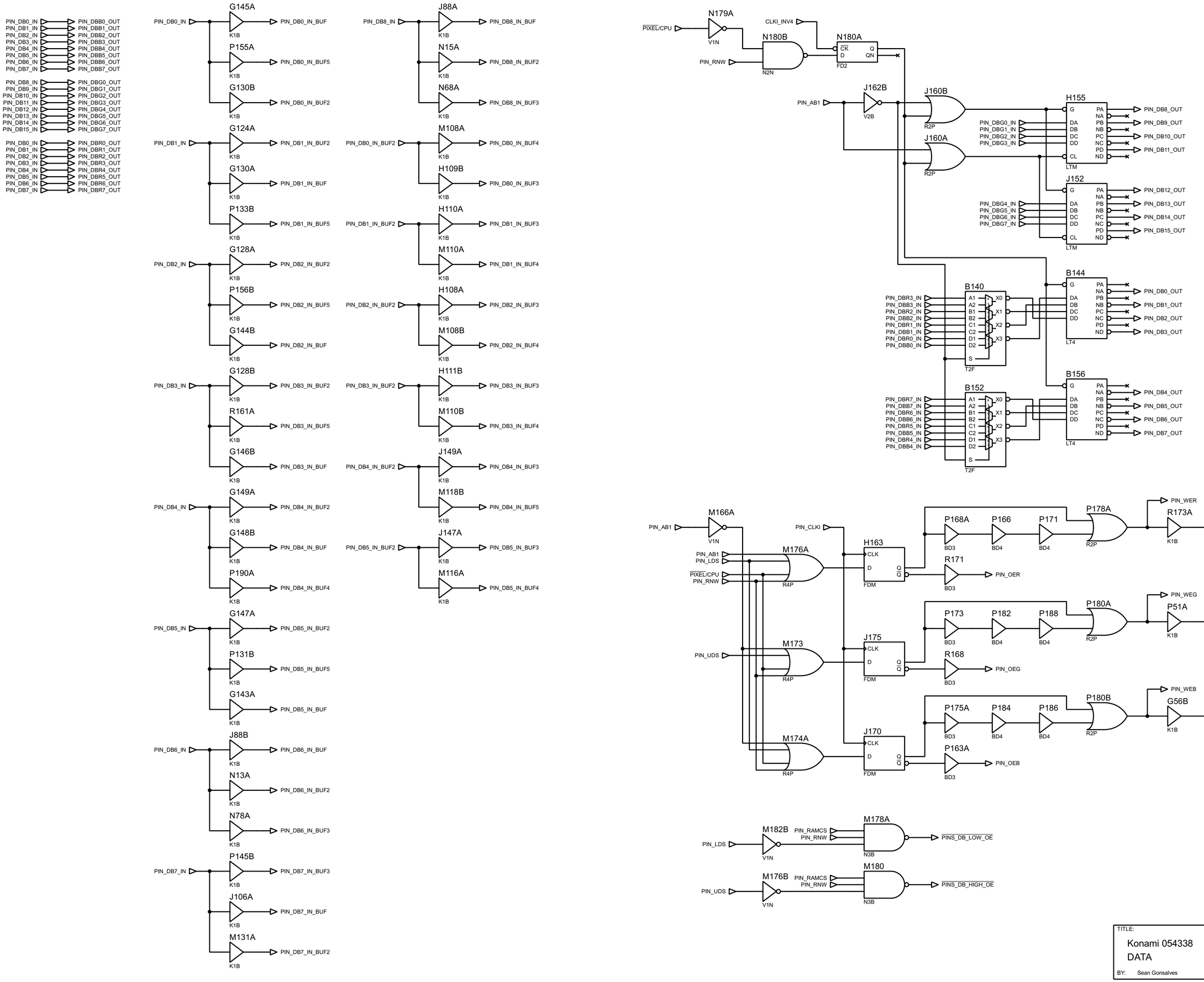

TITLE:	DATE:
Konami 054338 DATA	8/1/2026
BY: Sean Gonsalves REV: A	PAGE: 2/8

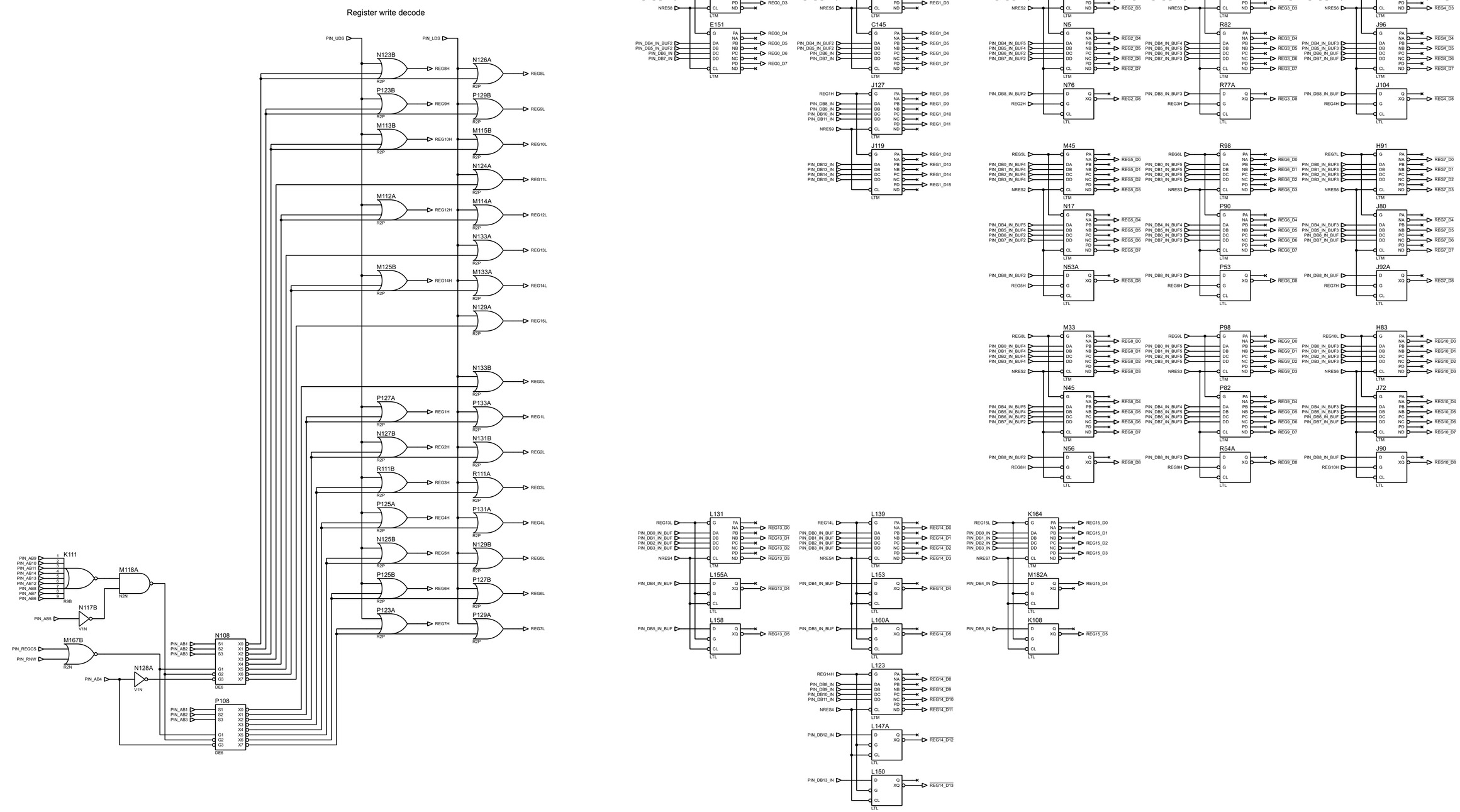

TITLE:	DATE:
Konami 054338 REGISTERS	8/1/2026
BY: Sean Gonsalves REV: A	PAGE: 3/8

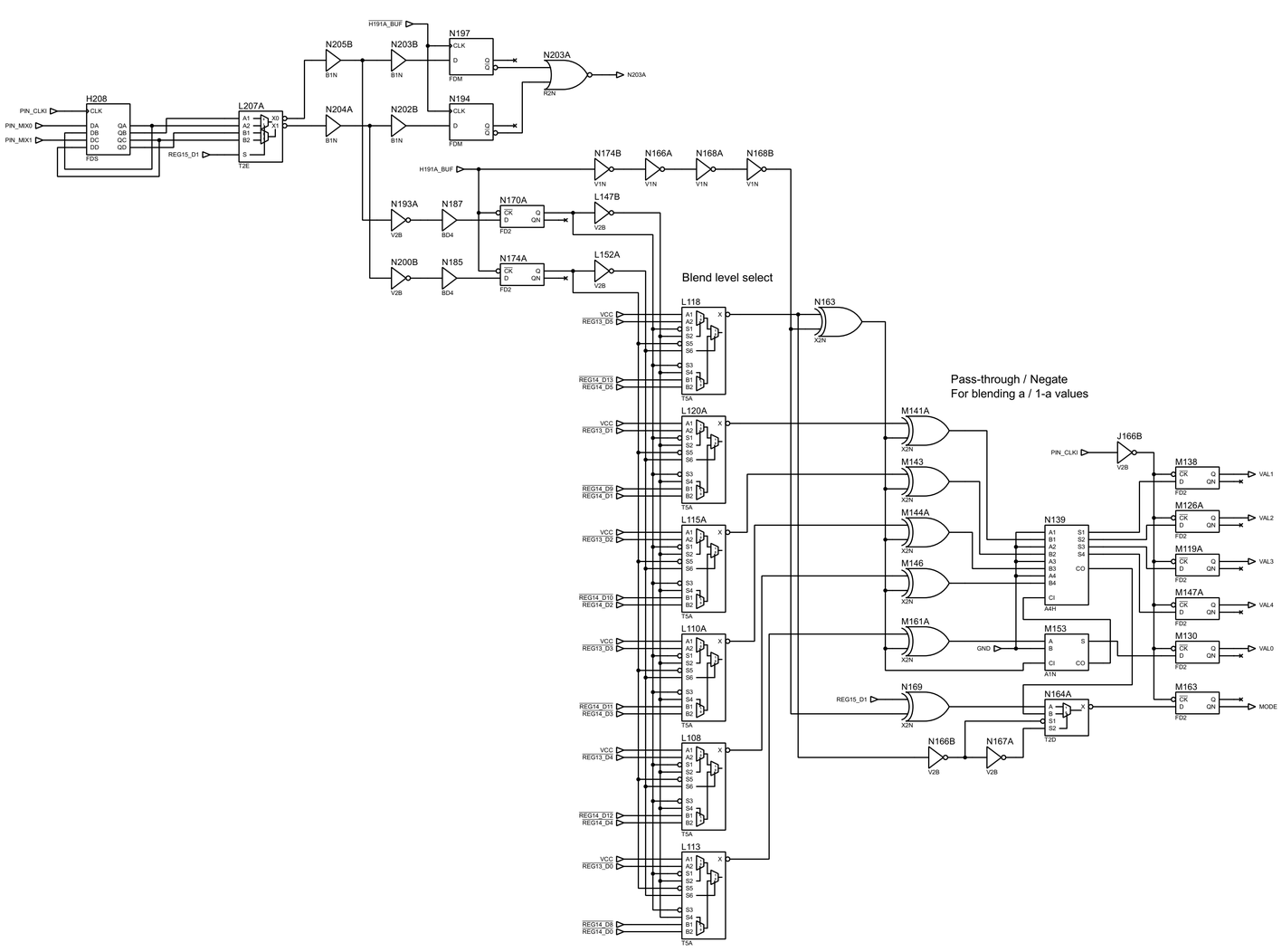

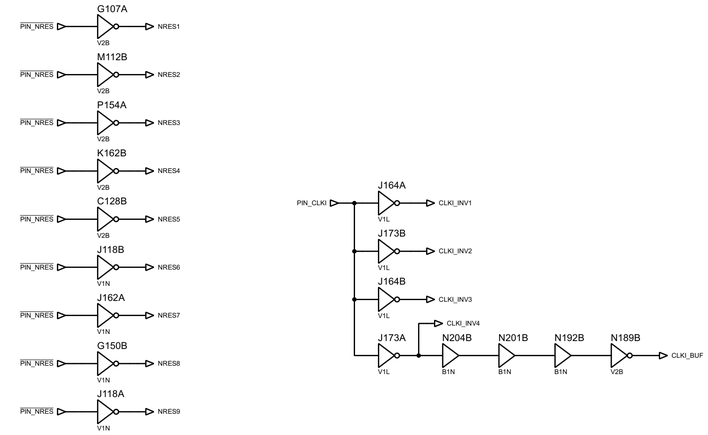

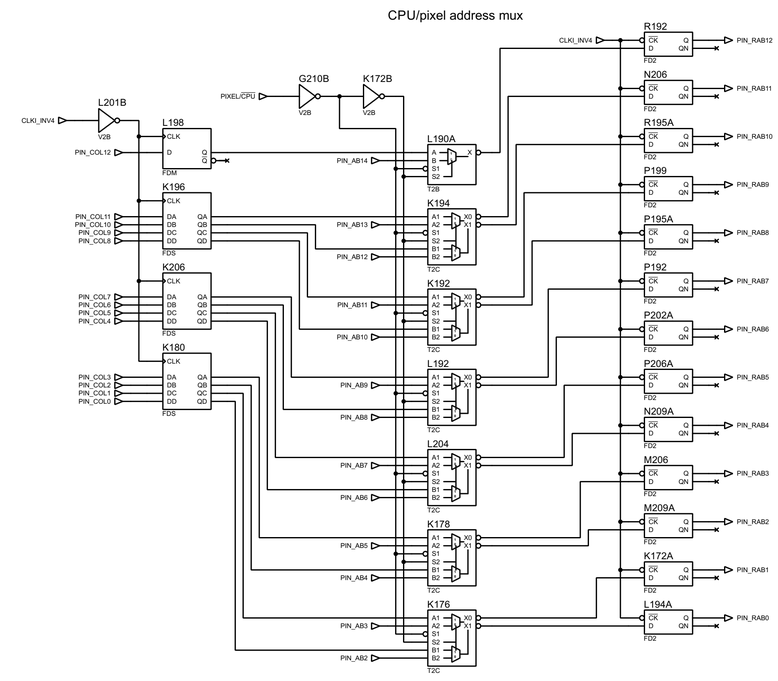

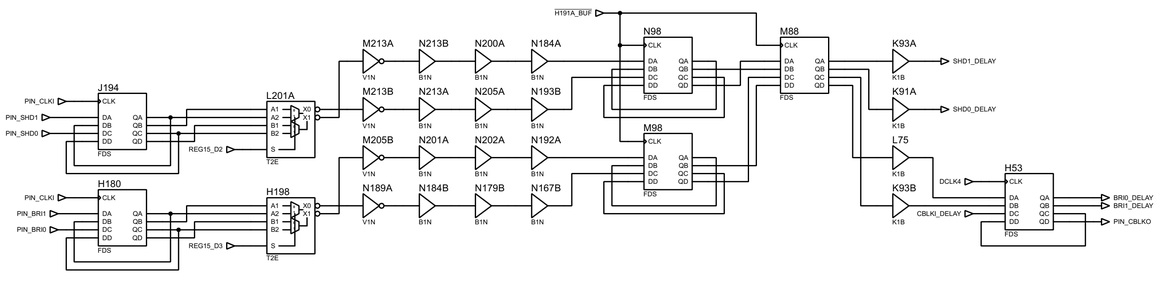

TITLE:	DATE:
Konami 054338 MISC	8/1/2026
BY: Sean Gonsalves REV: A	PAGE: 4/8

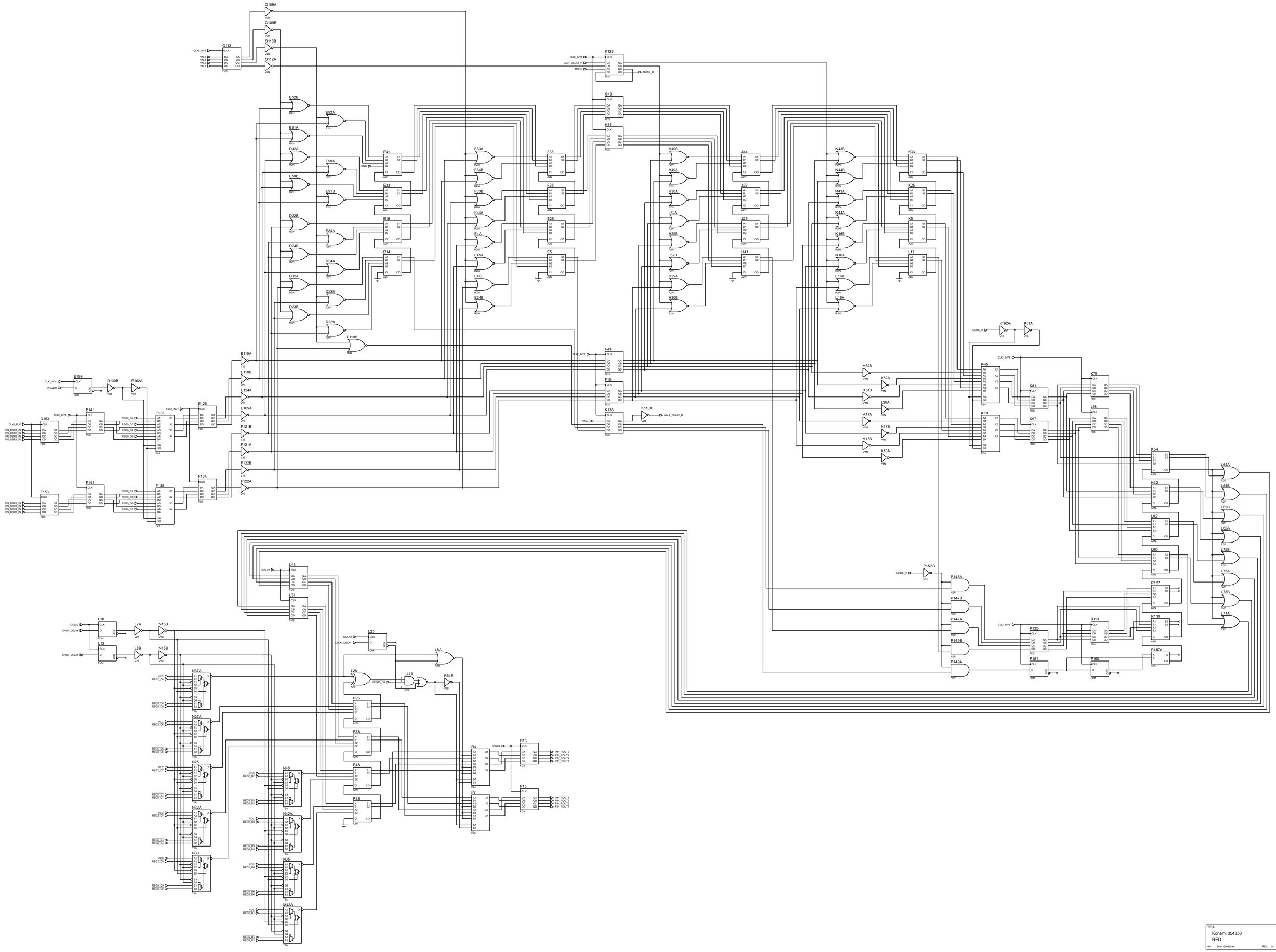
G109A
G109B
G110B
G112A
G113
CLK1_INV1
VAL2
VAL1
VAL0
VAL3
K123
CLK0_INV1
VAL4_DELAY_R
MODE
MODE_R
G43
H31
E52B
E52A
E51A
D42A
E50A
E50B
E51B
D22B
E24A
D24B
D24A
D12A
D23A
D23B
D22A
F119B
E41
E33
E16
D14
GND
F35
F25
E25
E5
F33A
F34B
F33B
F34A
E4A
E49A
E4B
E24B
H49B
H49A
H30A
J52A
H29B
J52B
H29A
H30B
J44
J33
J25
H41
K43B
K44B
K43A
K44A
K16B
K16A
L16B
L16A
K33
K25
K5
L17
K162A
K51A
K45
K19
K81
K97
K70
L98
K54
K62
L82
L90
R127
R138
R113
P157A
L64A
L64B
L62B
L62A
L75B
L73A
L73B
L71A
E159
D139B
E162A
D153
E141
E135
E125
F153
F141
F135
F125
E110A
E110B
E124A
E109A
F121B
F121A
F122B
F122A
F43
F15
K133
K110A
VAL4
VAL4_DELAY_R
K52B
K52A
K51B
L30A
K17A
K17B
K18B
K18A
P155B
P145A
P147B
P147A
P149B
P149A
P135
P151
P160
L43
L31
L10
L13
L7A
L8B
N15B
N16B
L25
L28
L8A
L41A
R54B
P25
P33
P43
R33
N37A
N27A
N25
N32A
N30
N40
N42A
N35
M42A
R4
P7
R13
P15
PIN_ROUT0
PIN_ROUT1
PIN_ROUT2
PIN_ROUT3
PIN_ROUT4
PIN_ROUT5
PIN_ROUT6
PIN_ROUT7
TITLE:
Konami 054338
RED
BY: Sean Gonsalves
REV: A
DATE:
8/1/2026
PAGE:
5/8

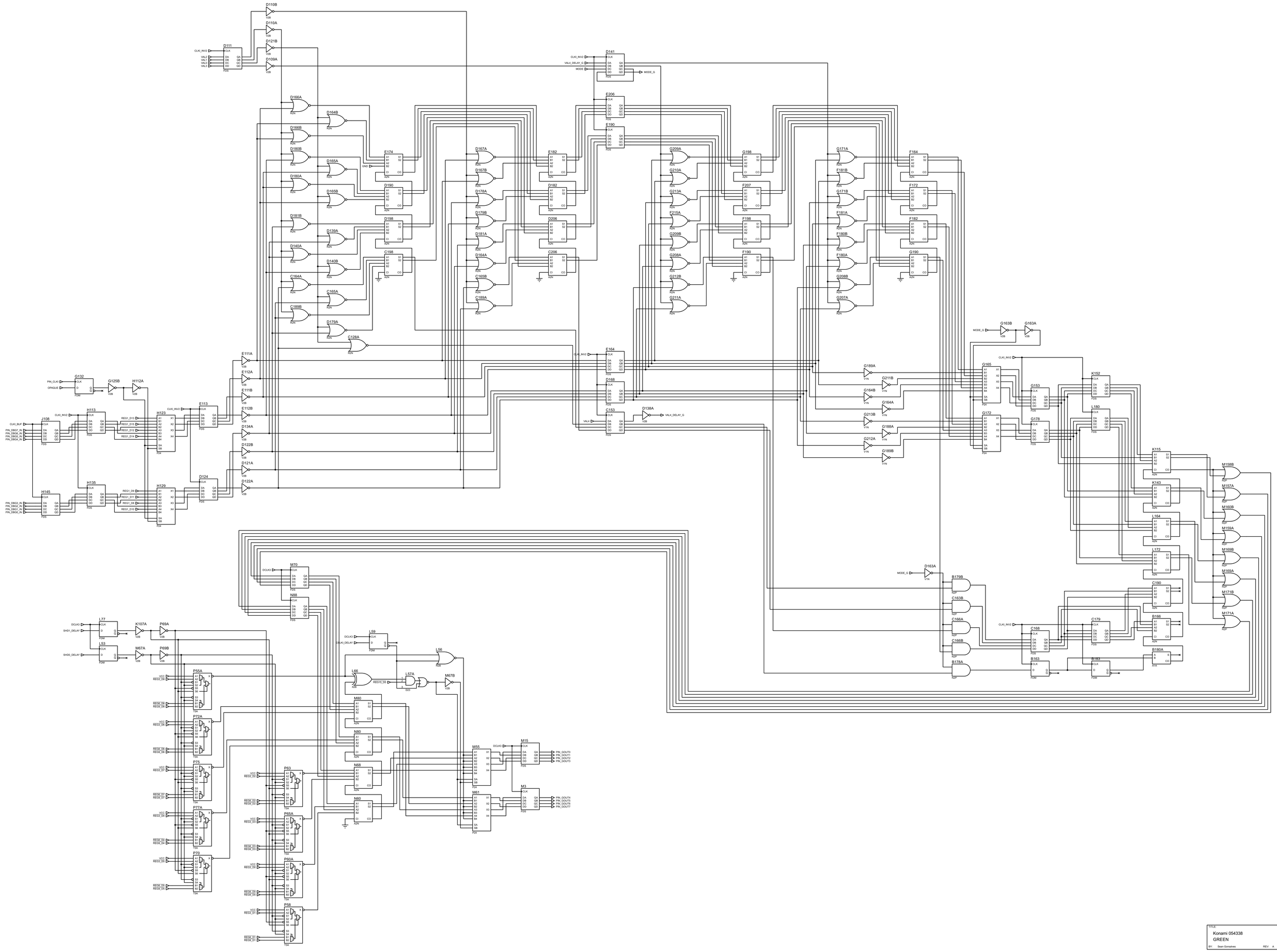

TITLE:	DATE:
Konami 054338 GREEN	8/1/2026
BY: Sean Gonsalves REV: A	PAGE: 6/8

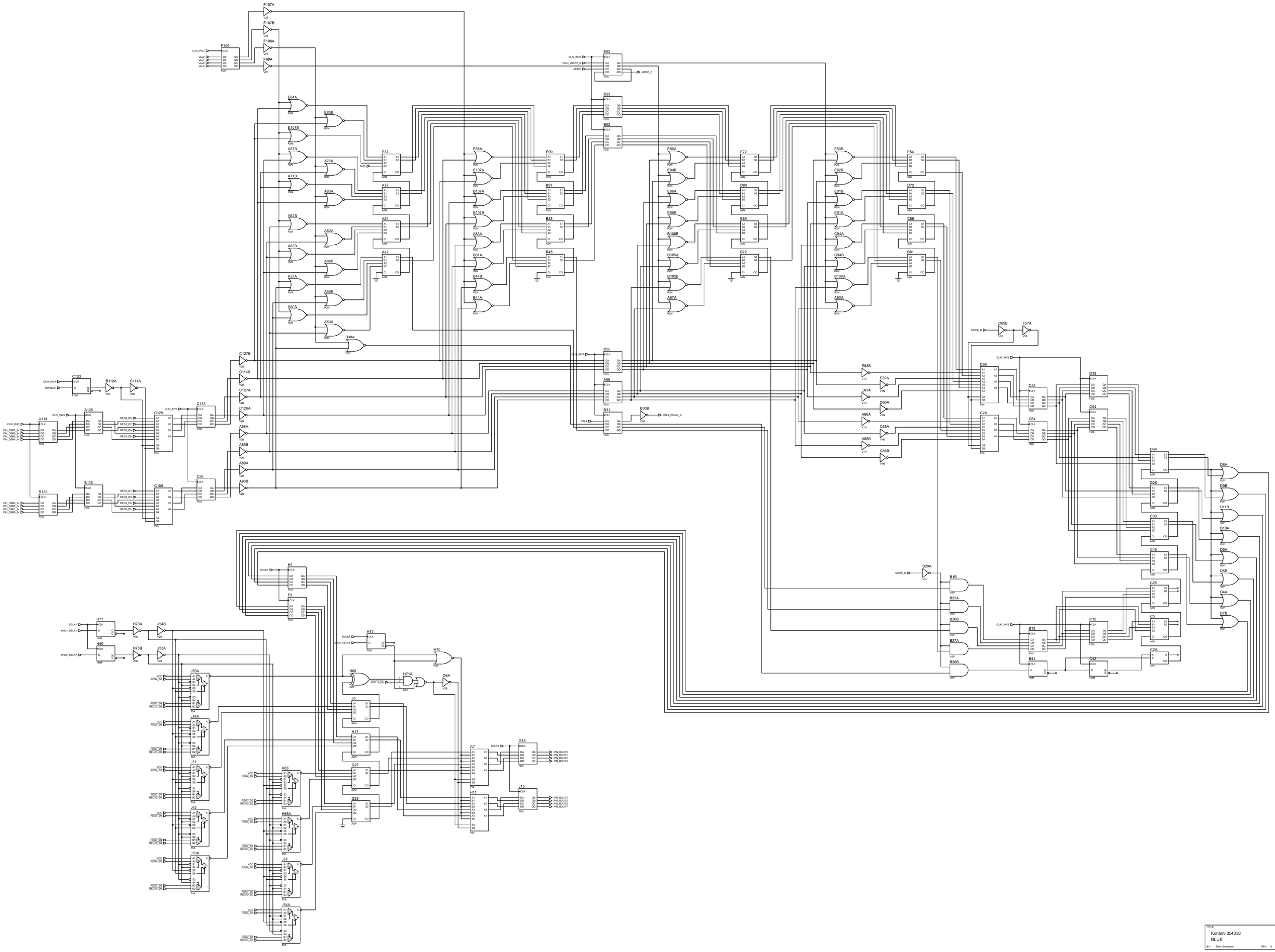

TITLE:	DATE:
Konami 054338 BLUE	8/1/2026 PAGE: 7/8
BY: Sean Gonsalves REV: A	

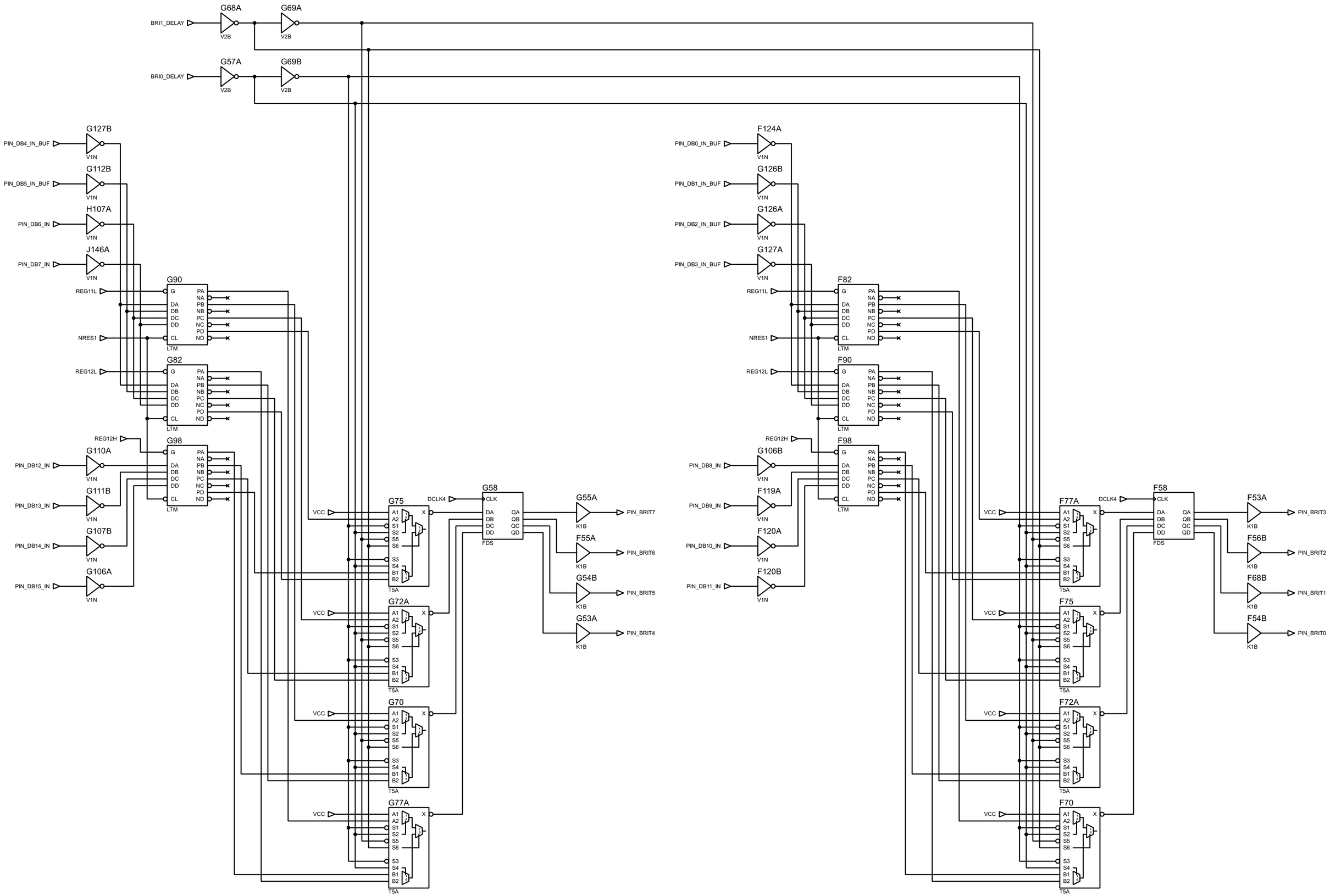

TITLE:	DATE:
Konami 054338 BRIGHTNESS	8/1/2026
BY: Sean Gonsalves REV: A	PAGE: 8/8