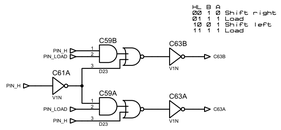

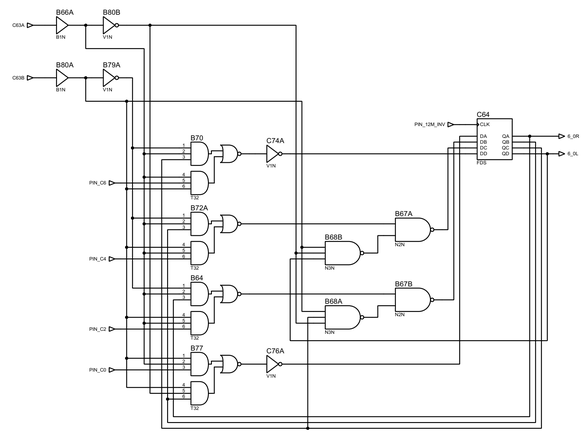

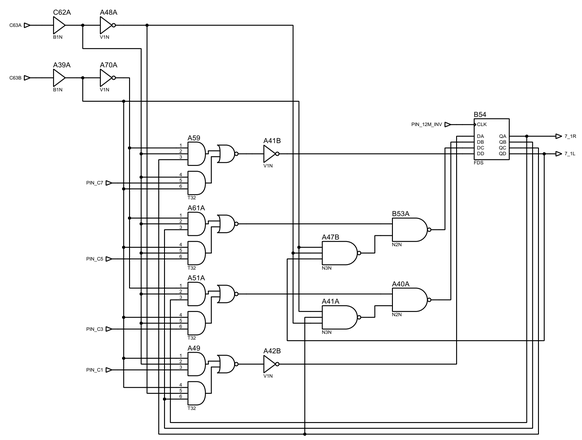

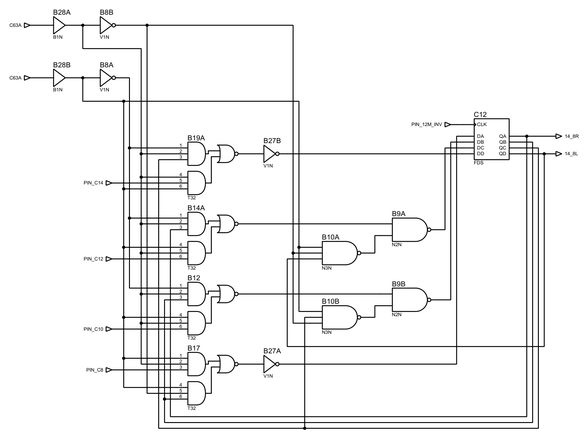

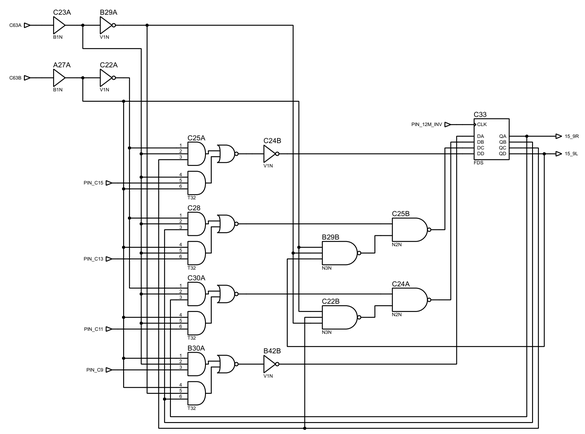

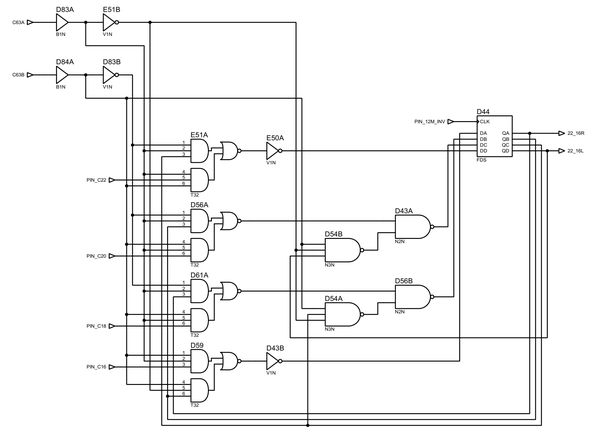

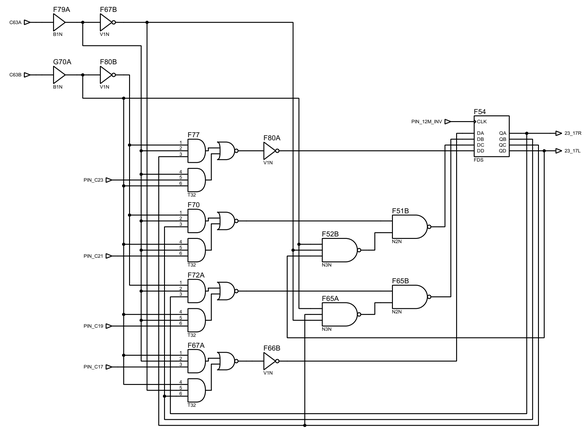

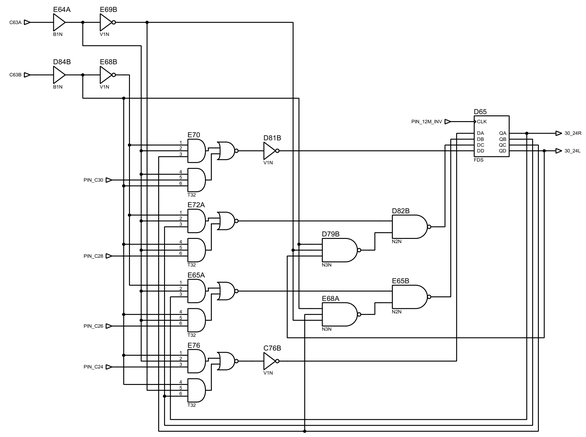

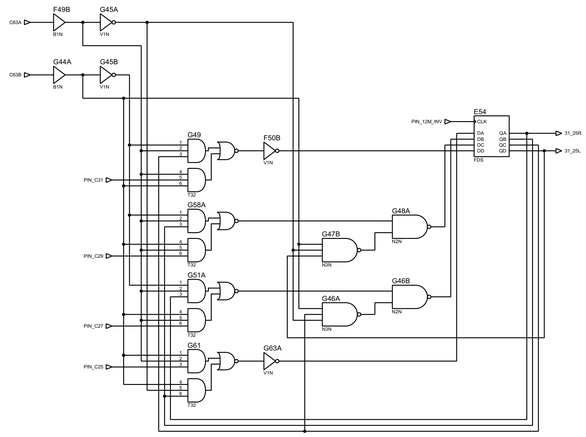

TITLE:	DATE:
NEO-ZMC2 SHIFT REGISTERS	8/19/2026
BY: Sean Gonsalves REV: A	PAGE: 1/3

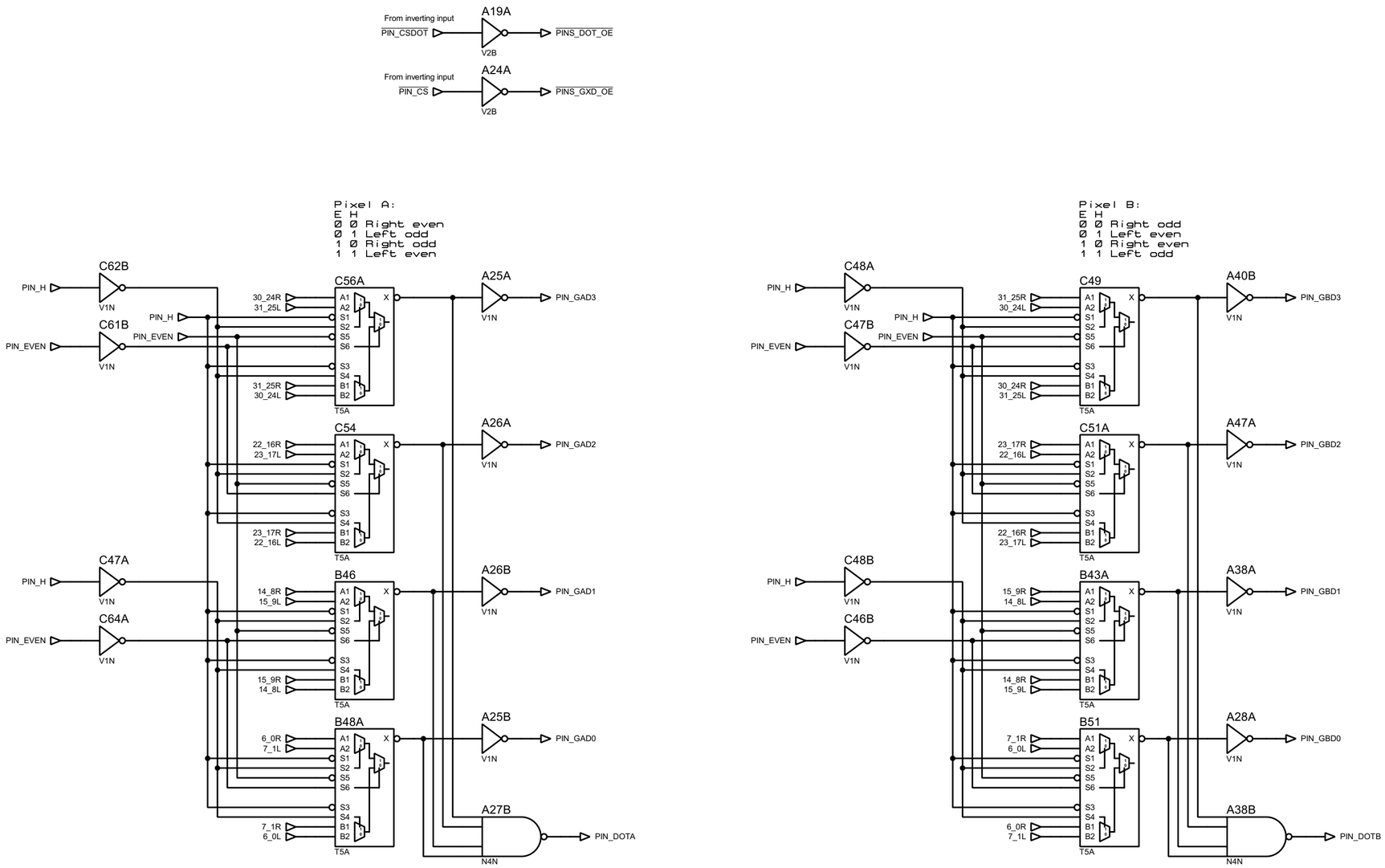

TITLE:	DATE:
NEO-ZMC2 PIXEL OUTPUT	8/19/2026
BY: Sean Gonsalves REV: A	PAGE: 2/3

	$0000~$7FFF	$8000~$BFFF	$C000~$DFFF	$E000~$EFFF	$F000~$F7FF
MA11	SDA11	SDA11	SDA11	SDA11	LAT0_D0
MA12	SDA12	SDA12	SDA12	LAT1_D0	LAT0_D1
MA13	SDA13	SDA13	LAT2_D0	LAT1_D1	LAT0_D2
MA14	SDA14	LAT3_D0	LAT2_D1	LAT1_D2	LAT0_D3
MA15	SDA15	LAT3_D1	LAT2_D2	LAT1_D3	LAT0_D4
MA16	0	LAT3_D2	LAT2_D3	LAT1_D4	LAT0_D5
MA17	0	LAT3_D3	LAT2_D4	LAT1_D5	LAT0_D6
MA18	0	LAT3_D4	LAT2_D5	LAT1_D6	LAT0_D7
MA19	0	LAT3_D5	LAT2_D6	LAT1_D7	0
MA20	0	LAT3_D6	LAT2_D7	0	0
MA21	0	LAT3_D7	0	0	0

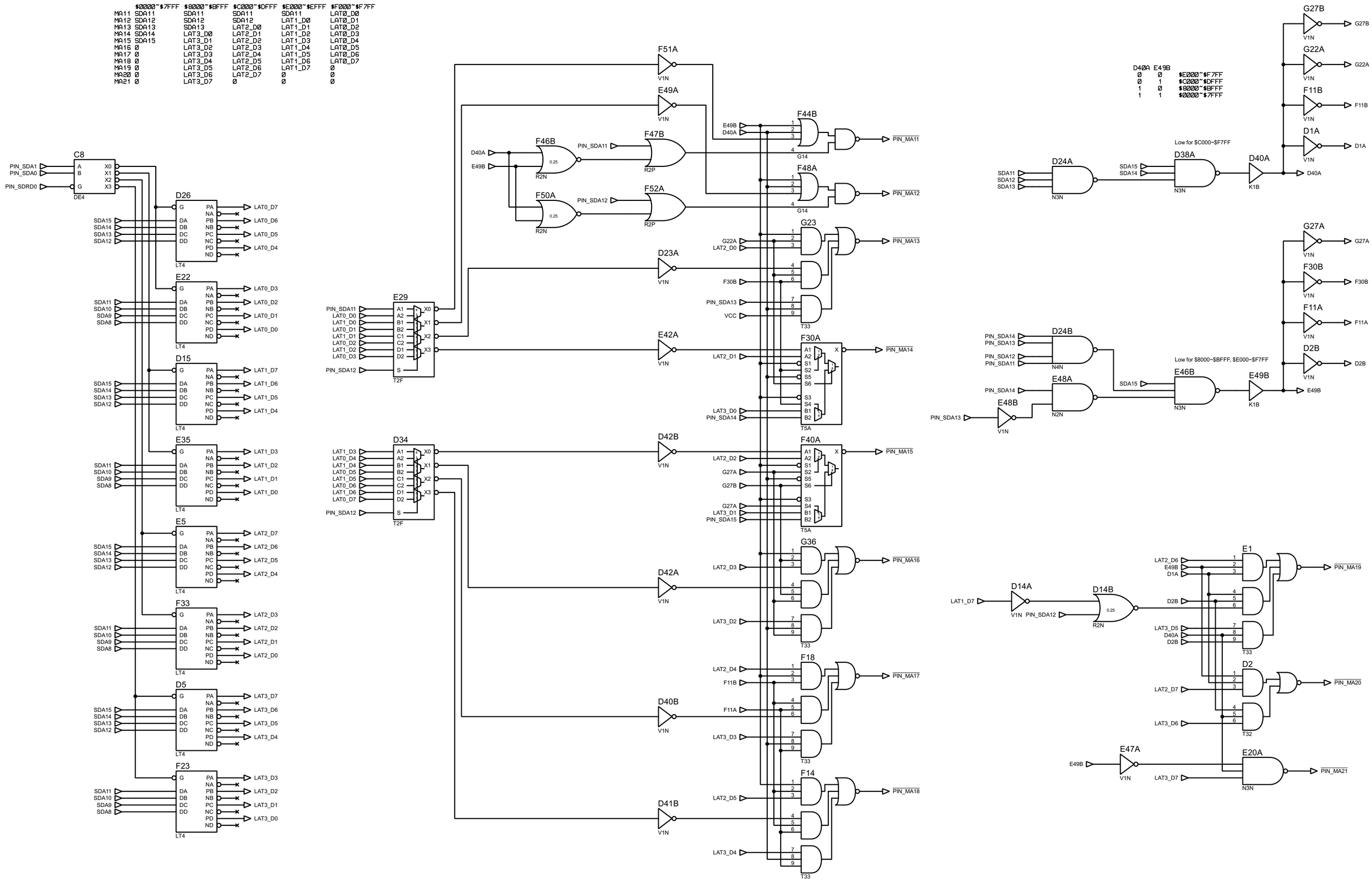

TITLE:	DATE:
NEO-ZMC2 Z80 BANKSWITCHING	8/19/2026
BY: Sean Gonsalves REV: A	PAGE: 3/3