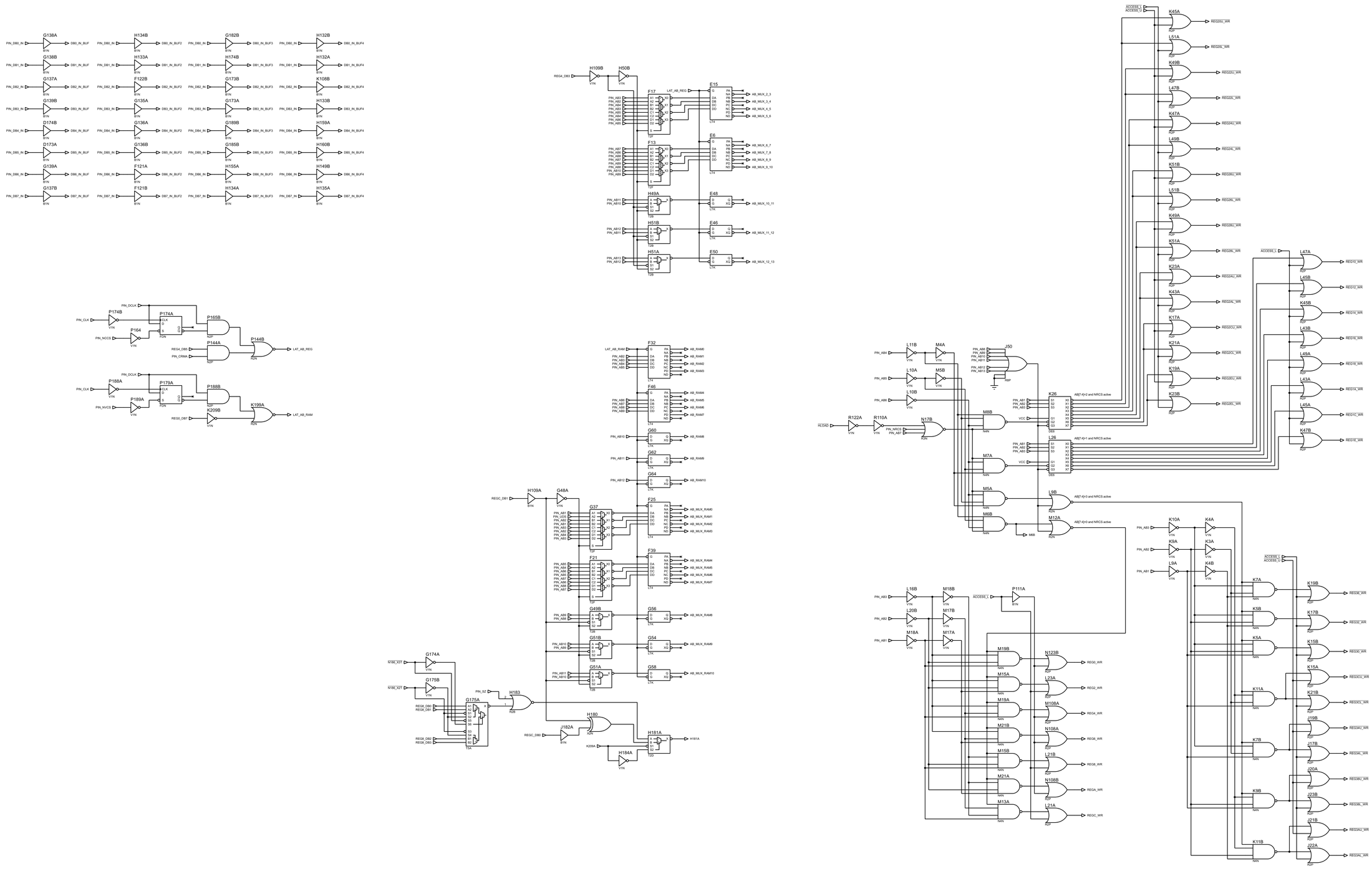

TITLE:	DATE:
Konami 054156 ADDRESS DECODE	3/23/2026
BY: Sean Gonsalves REV: A	PAGE: 1/12

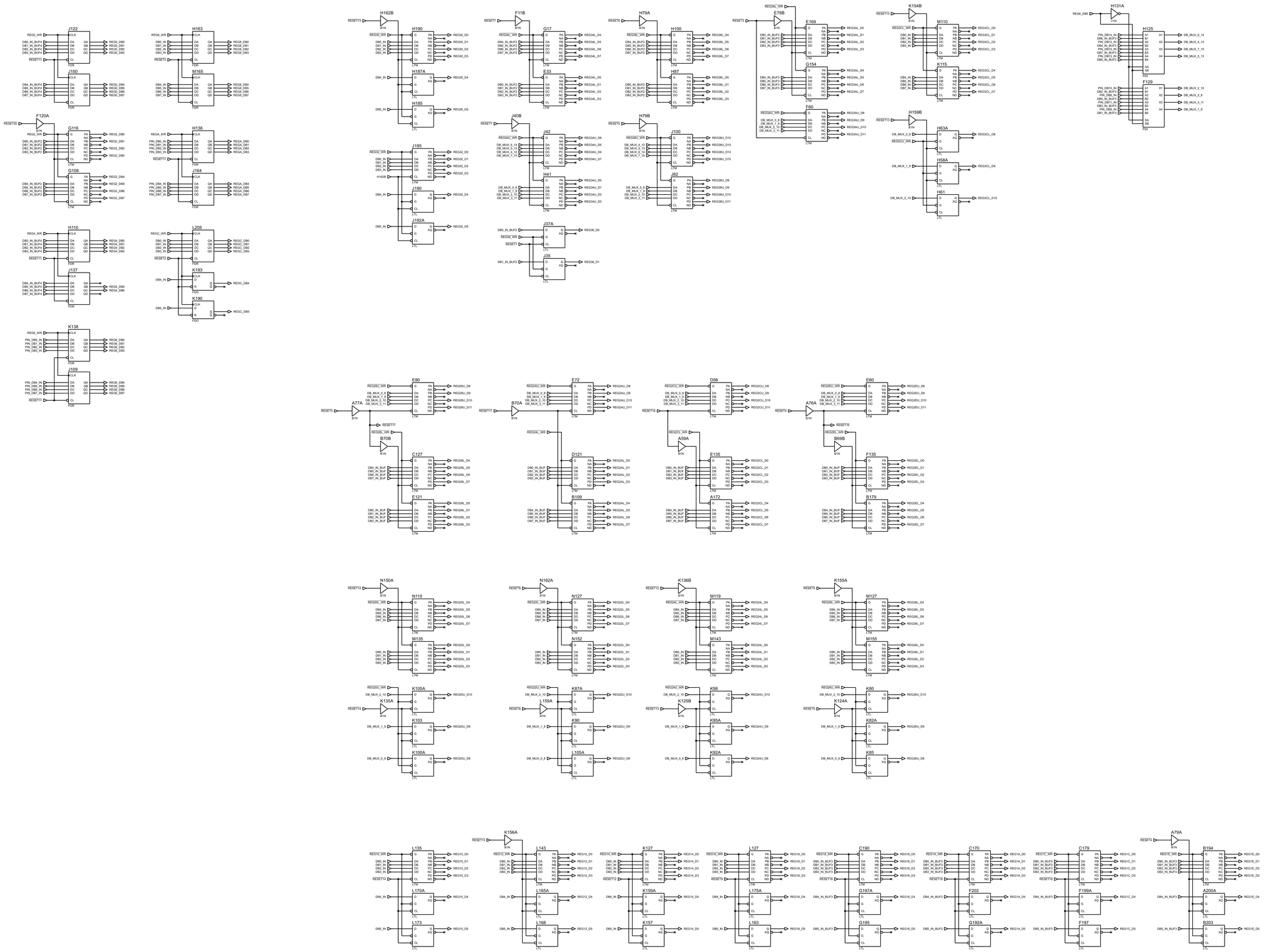

TITLE:	DATE:
Konami 054156 REGISTERS	3/23/2026
BY: Sean Gonsalves REV: A	PAGE: 2/12

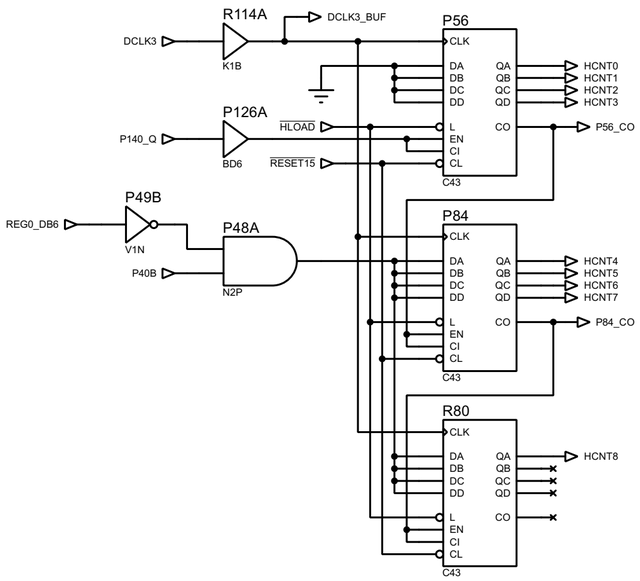

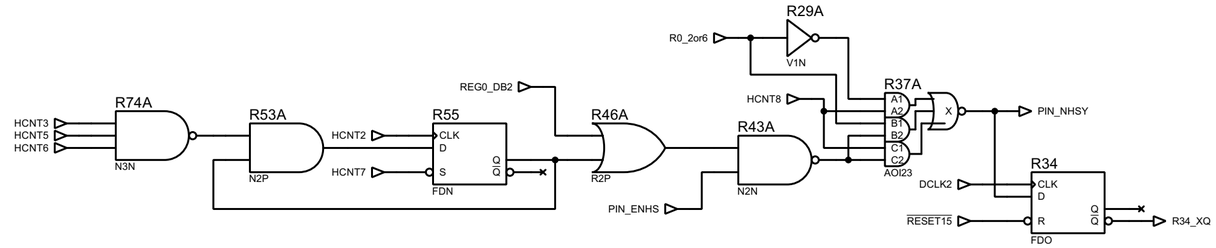

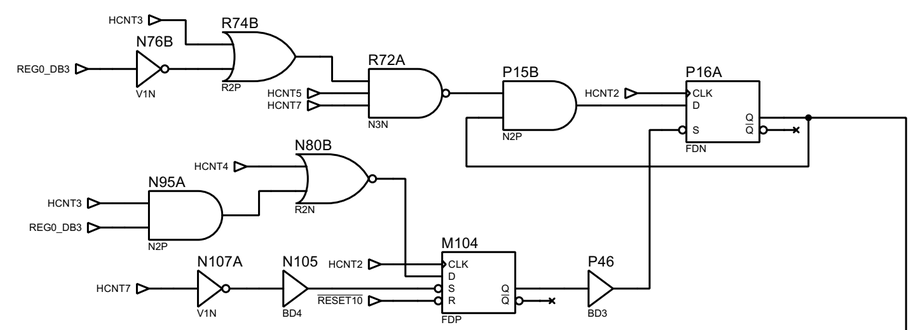

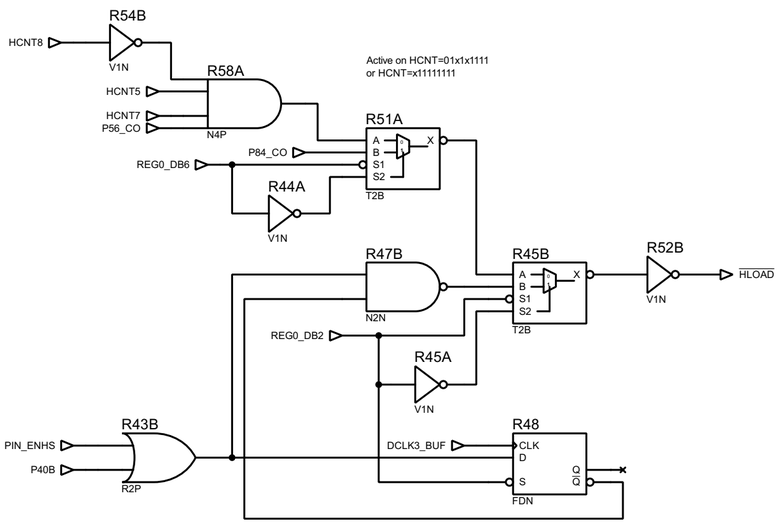

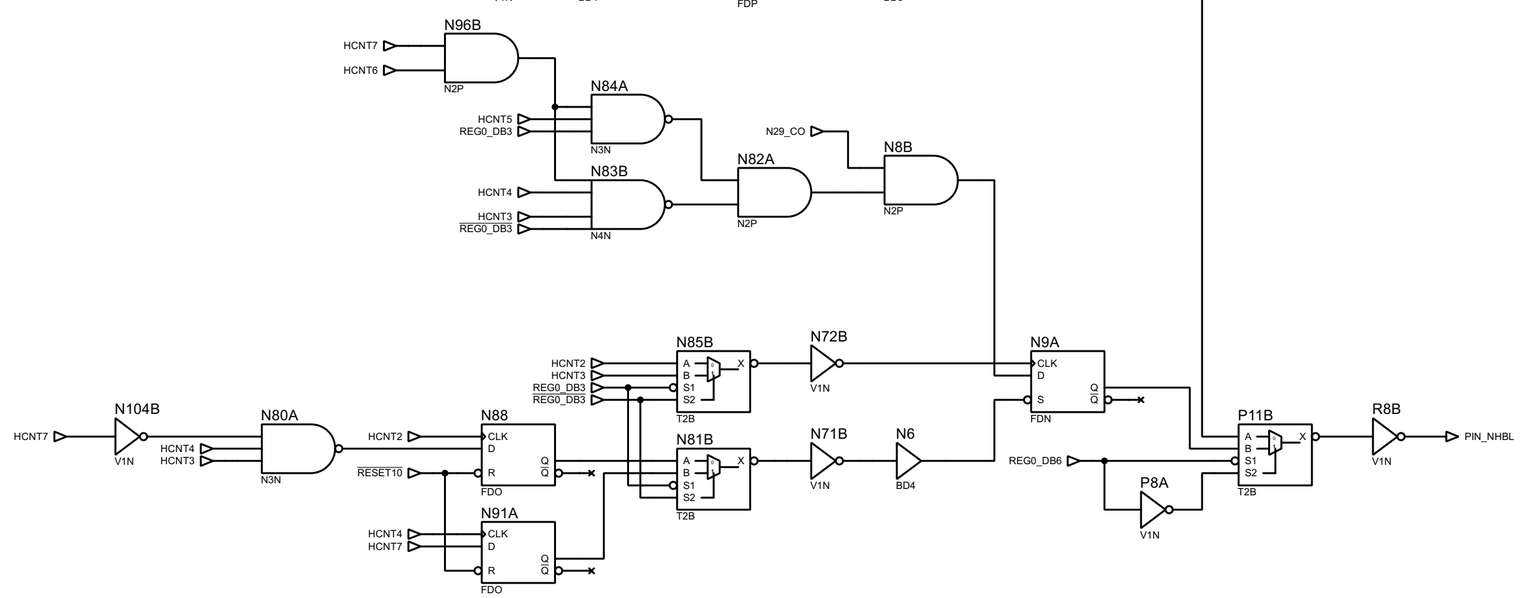

TITLE:	DATE:
Konami 054156 HORIZONTAL	3/23/2026
BY: Sean Gonsalves REV: A	PAGE: 3/12

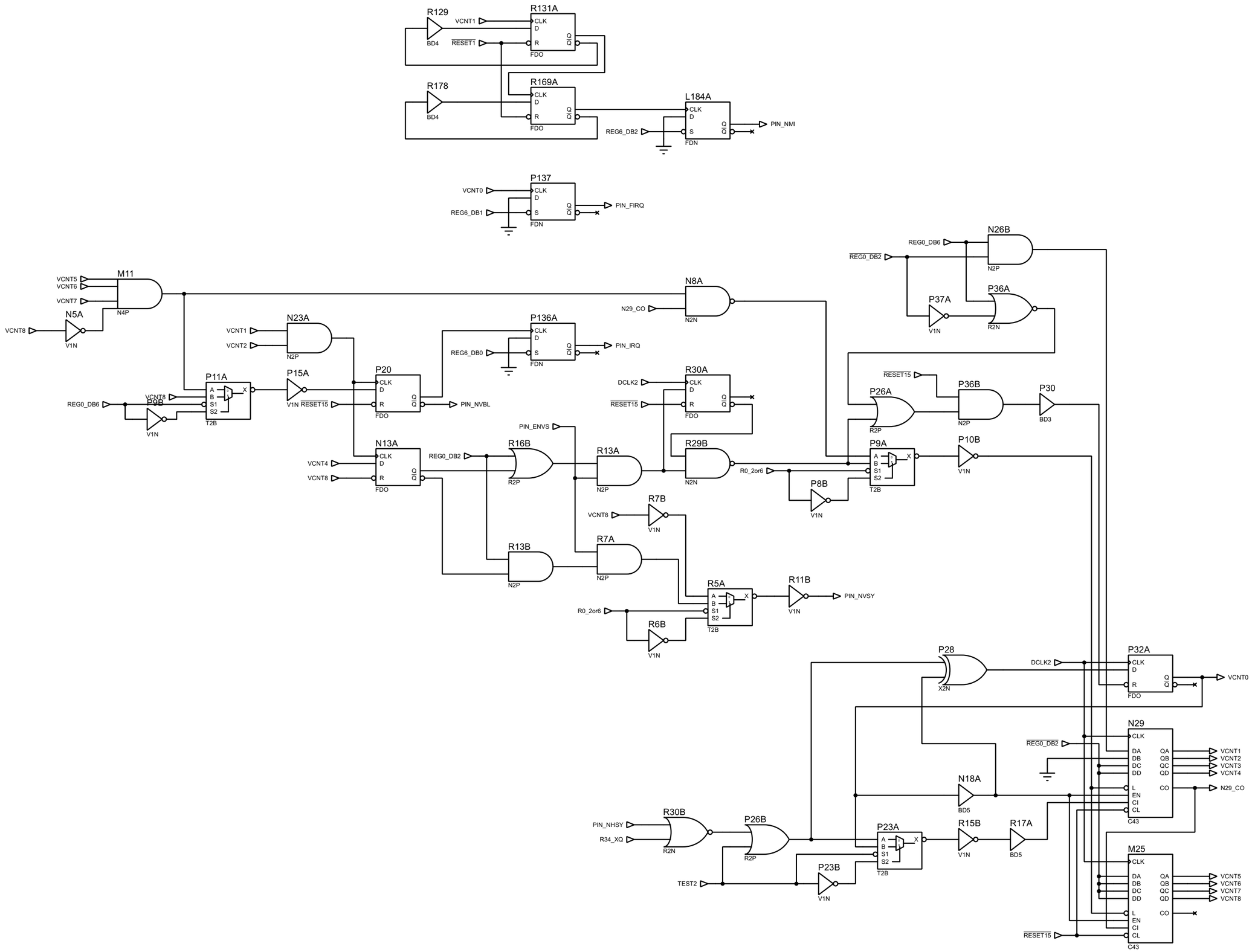

TITLE:	DATE:
Konami 054156 VERTICAL	3/23/2026
BY: Sean Gonsalves REV: A	PAGE: 4/12

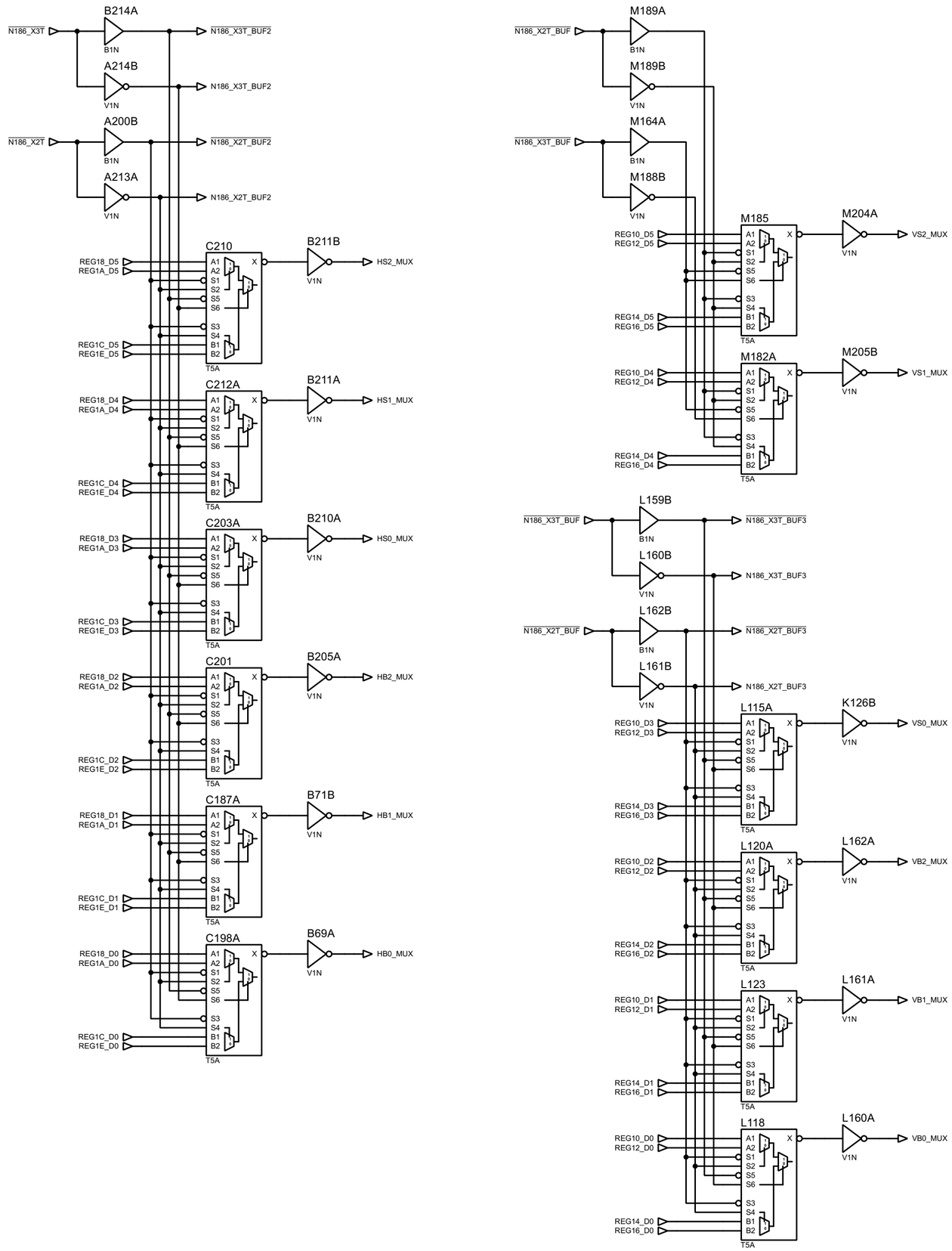

TITLE:	DATE:
Konami 054156 START / SIZE MUX	3/23/2026
BY: Sean Gonsalves REV: A	PAGE: 5/12

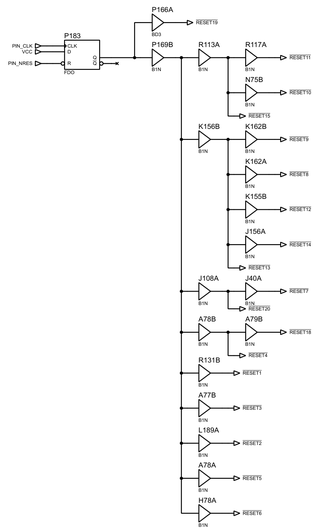

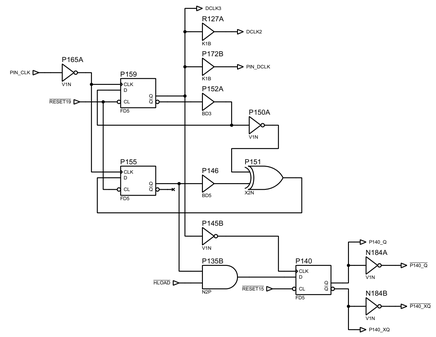

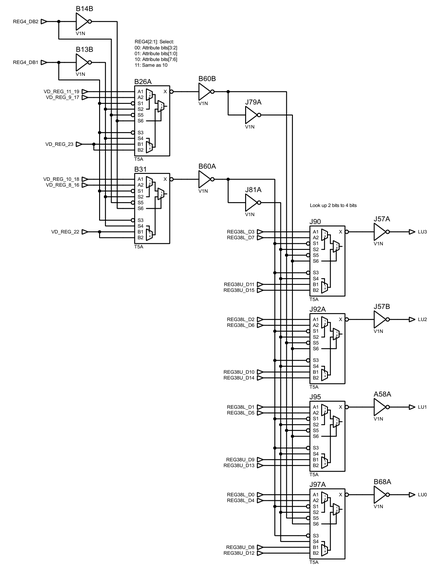

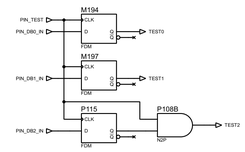

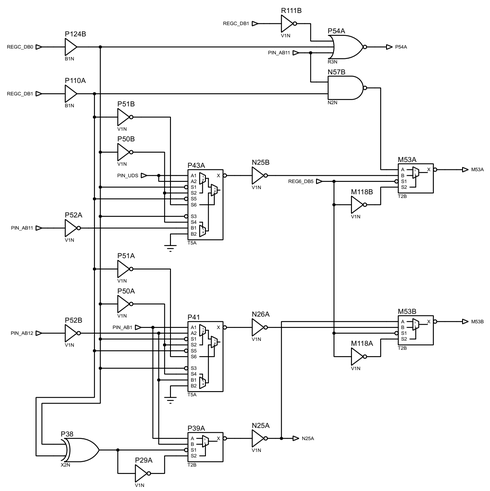

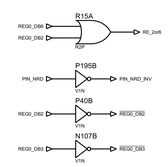

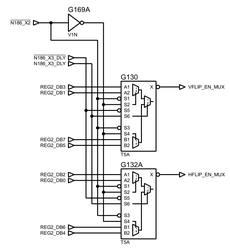

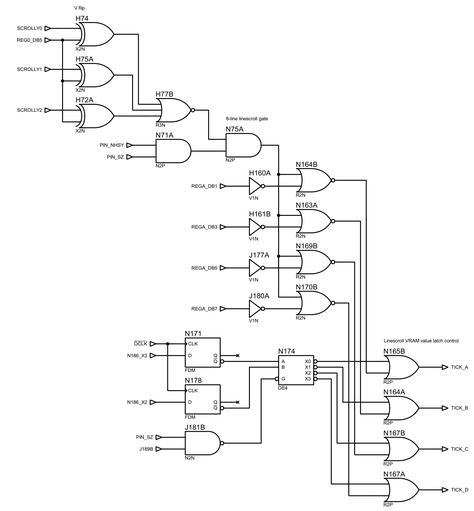

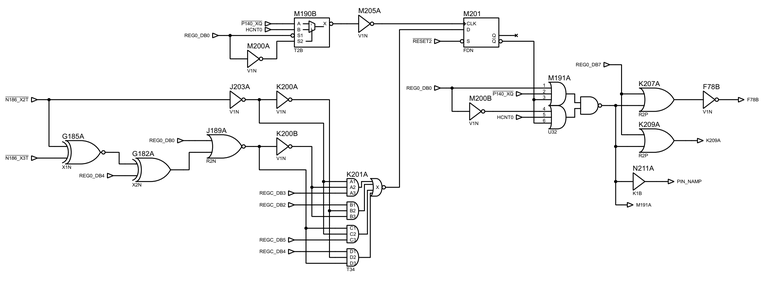

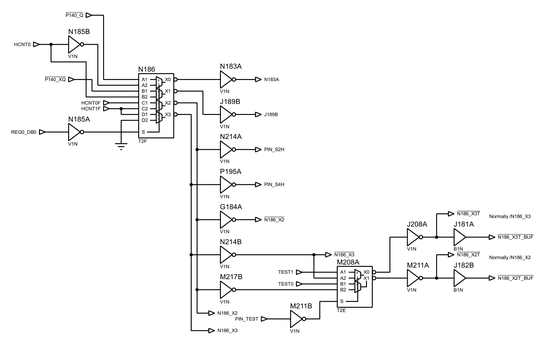

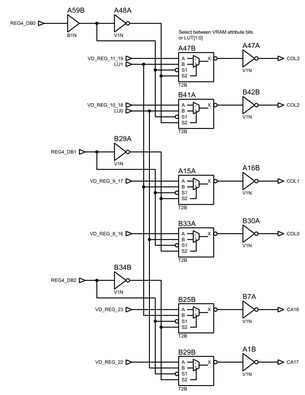

TITLE:	DATE:
Konami 054156 MISC	3/23/2026
BY: Sean Goncalves REV: A	PAGE: 6/12

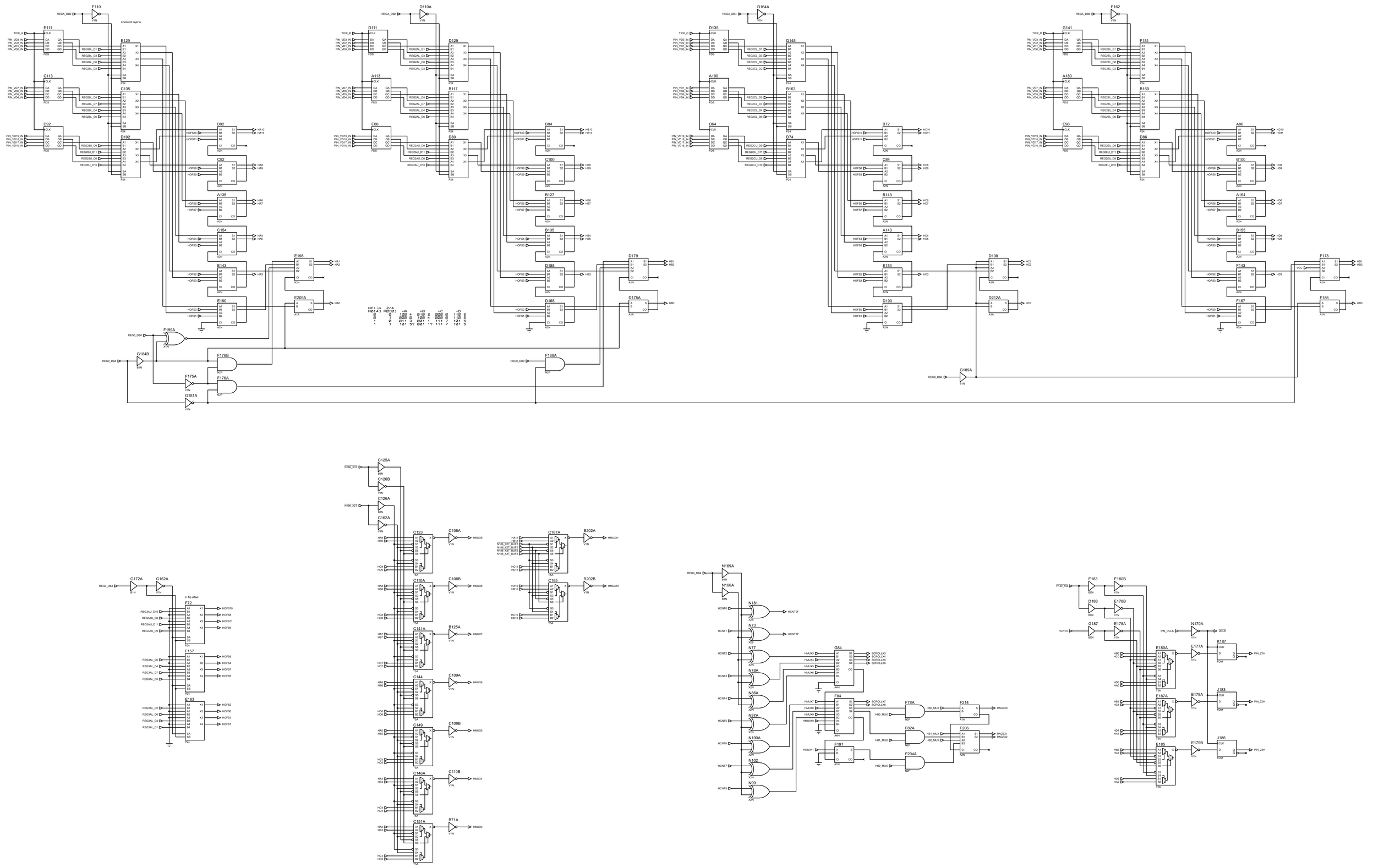

TITLE:	DATE:
Konami 054156 SCROLL X	3/23/2026
BY: Sean Gonsalves REV: A	PAGE: 7/12

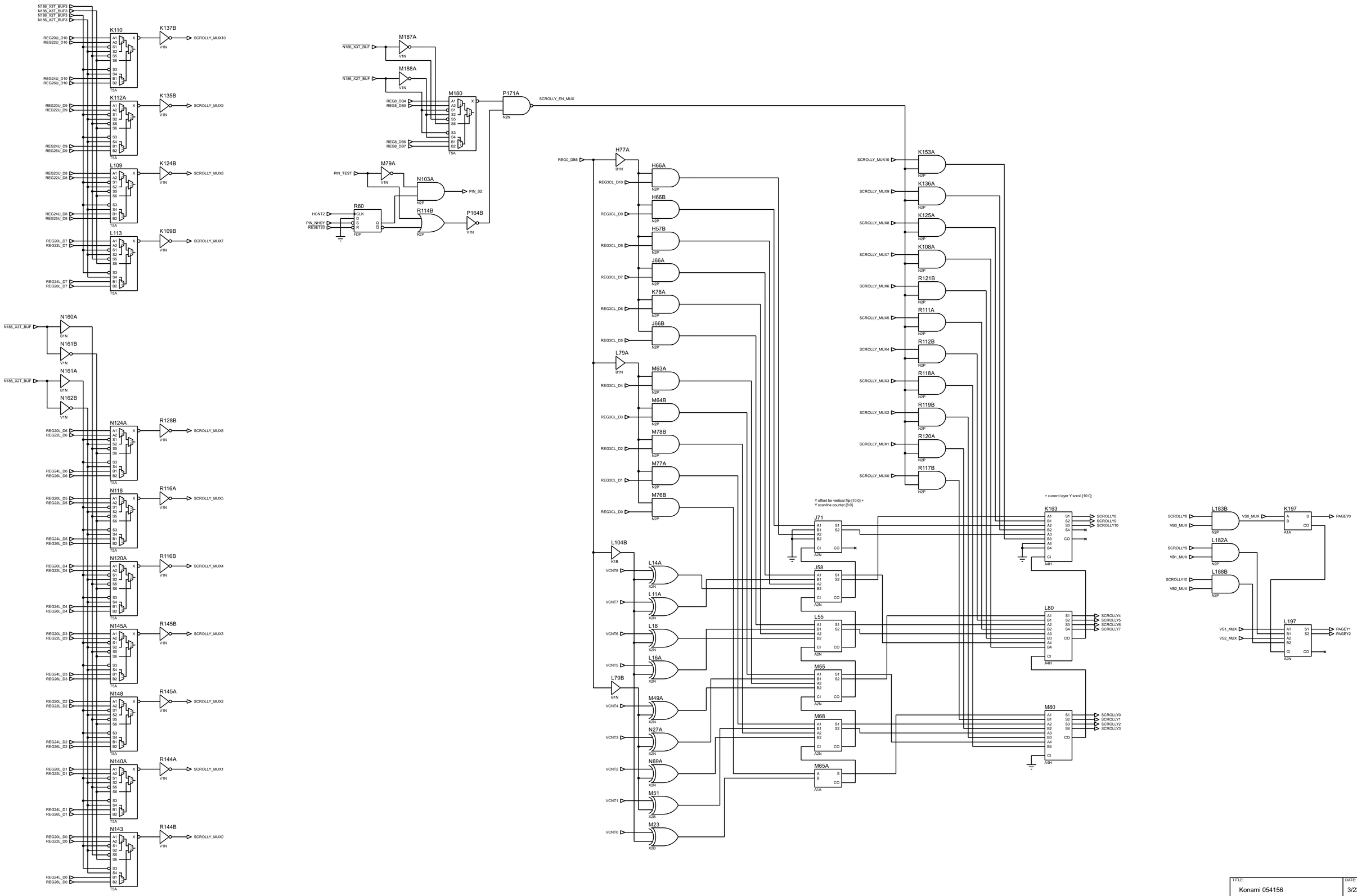

TITLE:	DATE:
Konami 054156 SCROLL Y	3/23/2026
BY: Sean Gonsalves REV: A	PAGE: 8/12

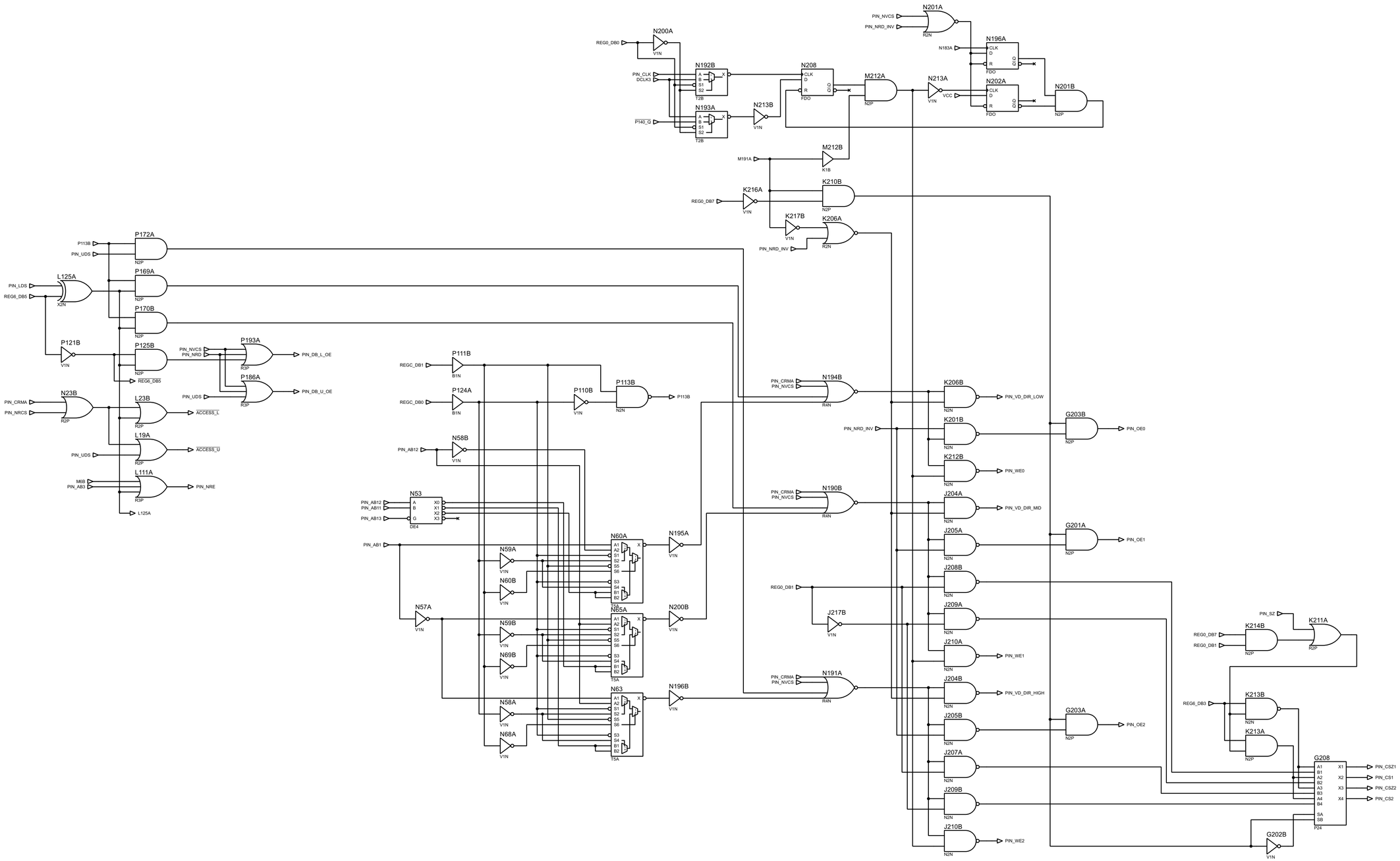

TITLE:	DATE:
Konami 054156 VRAM CONTROL	3/23/2026
BY: Sean Gonsalves REV: A	PAGE: 9/12

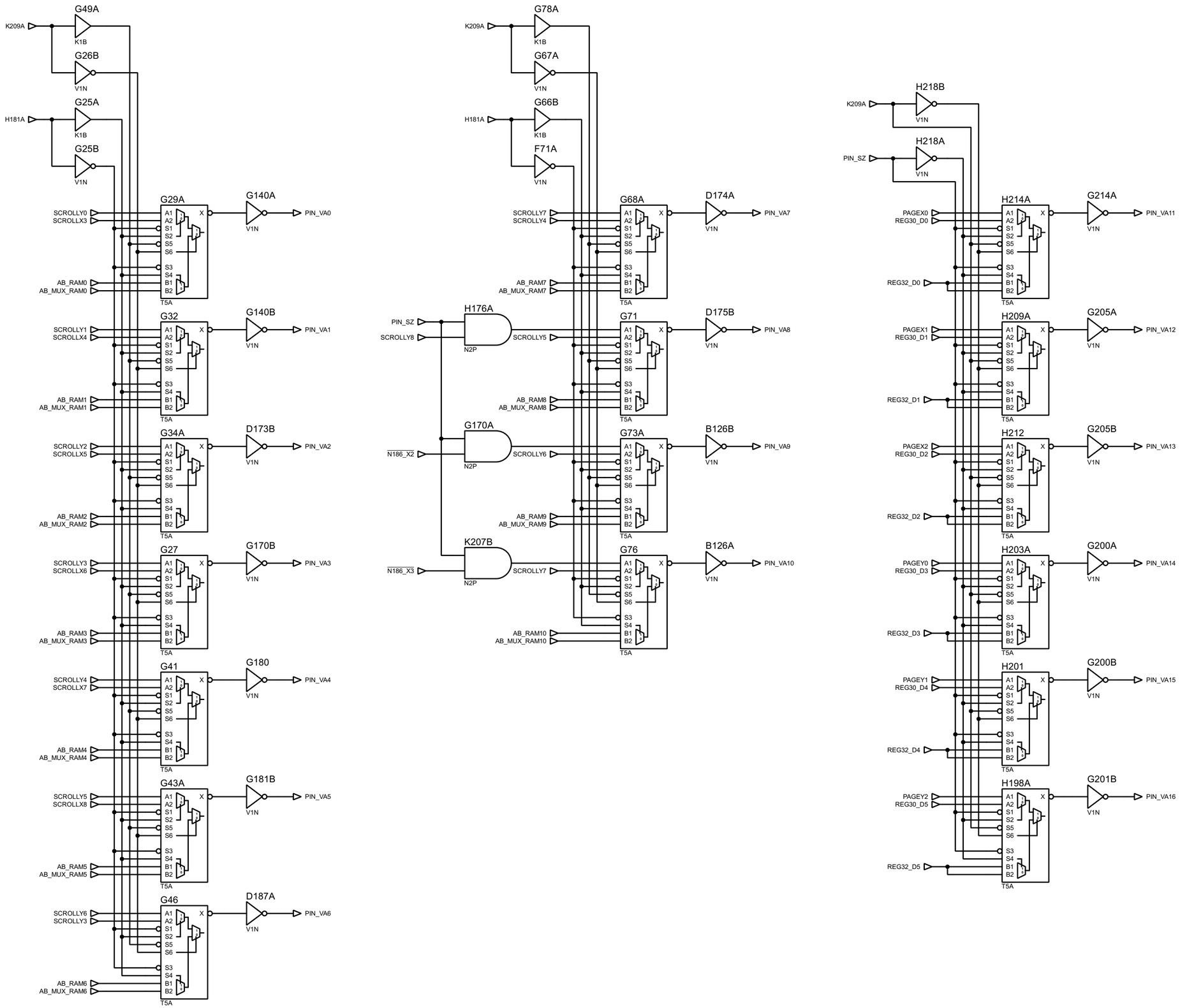

TITLE:	DATE:
Konami 054156 VRAM ADDRESS	3/23/2026
BY: Sean Gonsalves REV: A	PAGE: 10/12

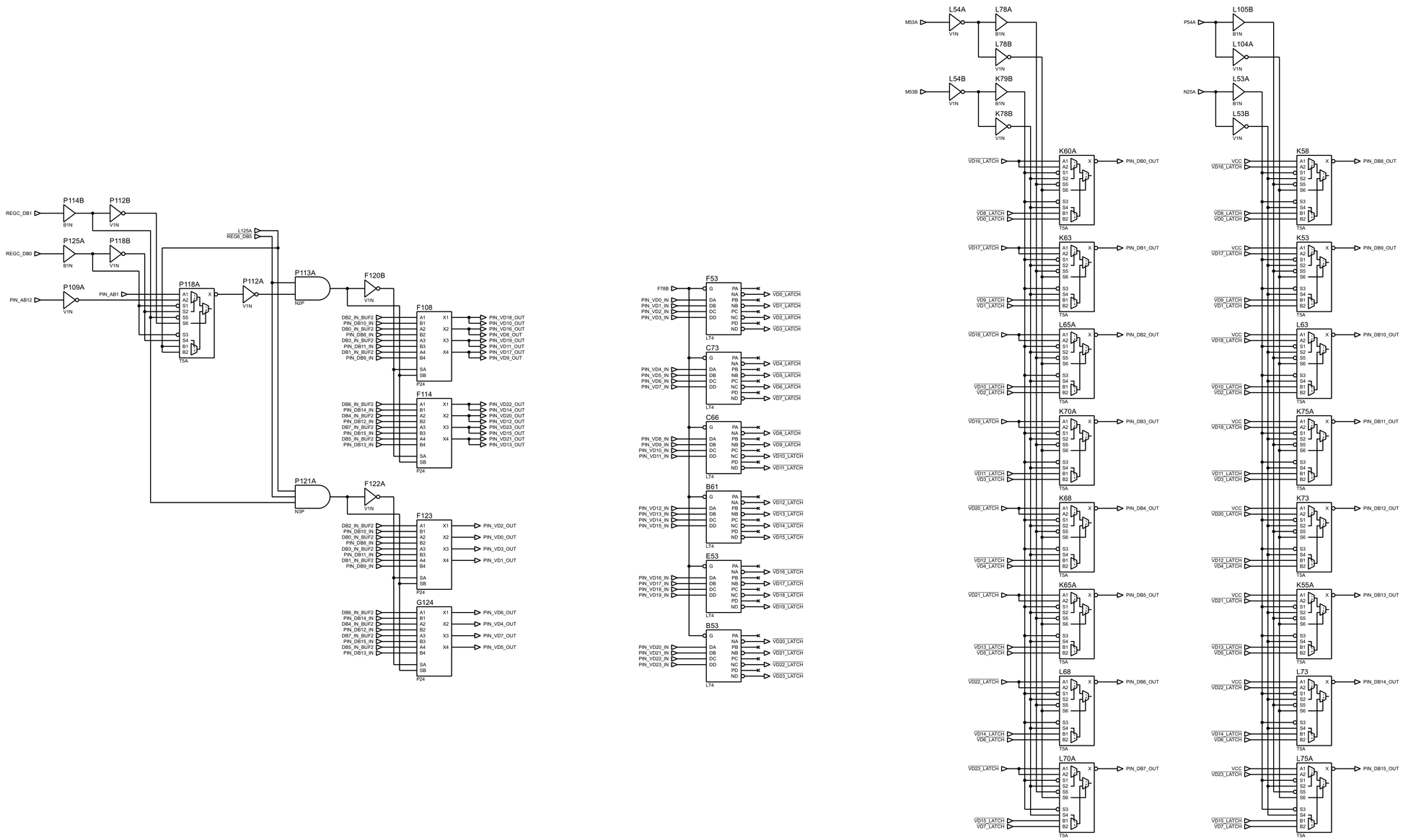

TITLE:	DATE:
Konami 054156 VRAM DATA	3/23/2026
BY: Sean Gonsalves REV: A	PAGE: 11/12

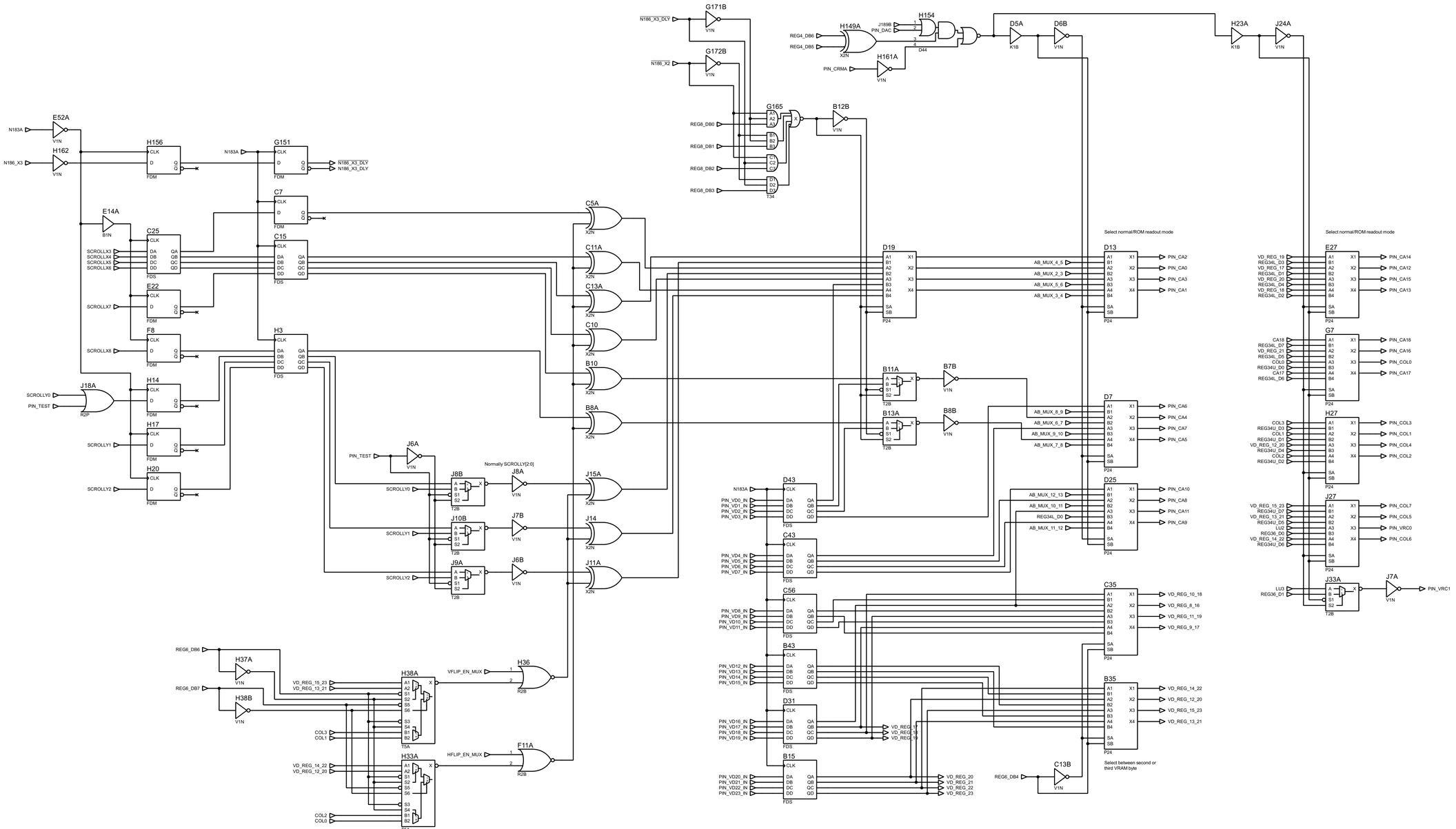

TITLE: Konami 054156 OUTPUTS	DATE: 3/23/2026
BY: Sean Gonsalves REV: A	PAGE: 12/12