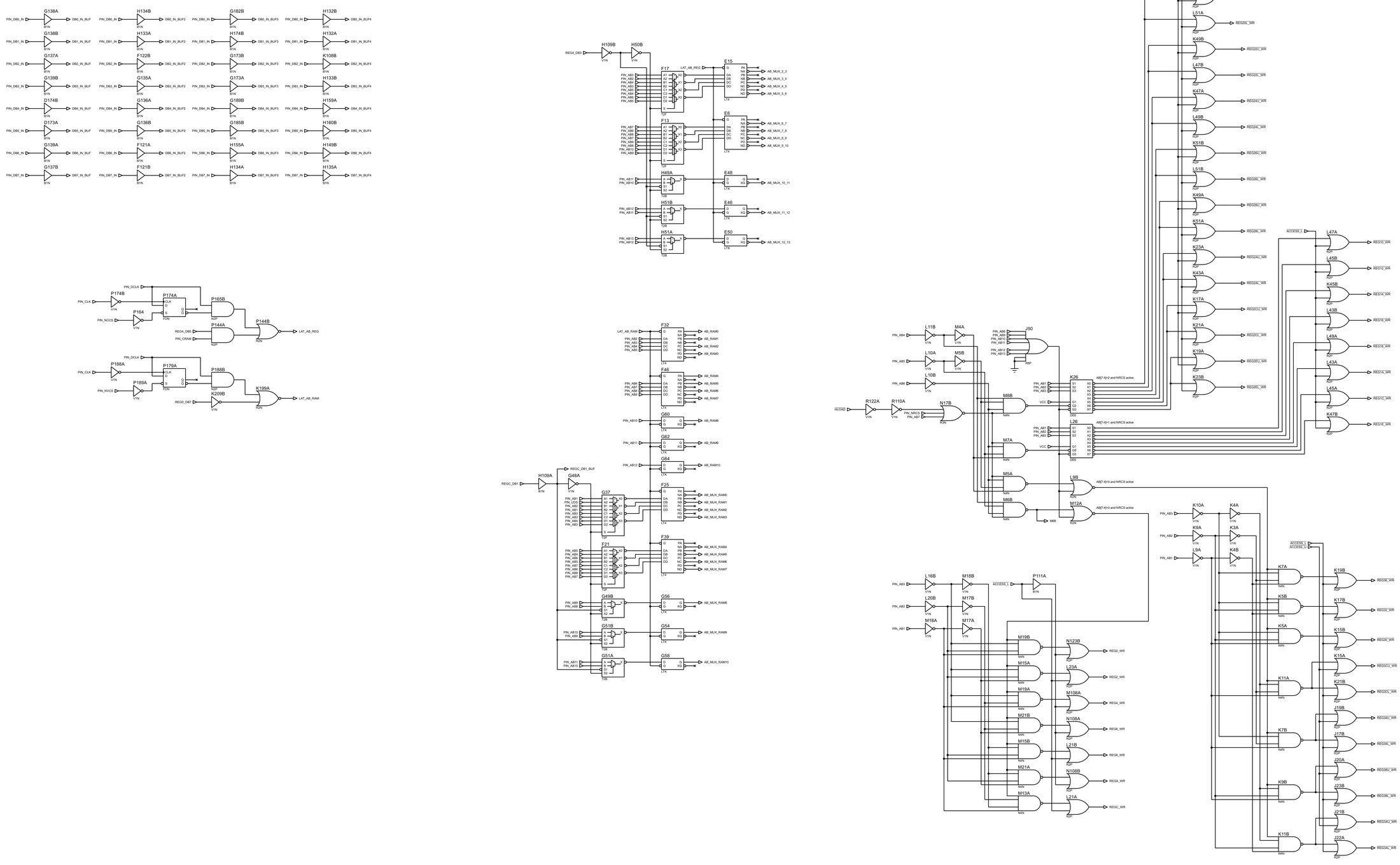

TITLE:	DATE:
Konami 054156 ADDRESS DECODE	4/13/2026
BY: Sean Gonsalves REV: A	PAGE: 1/12

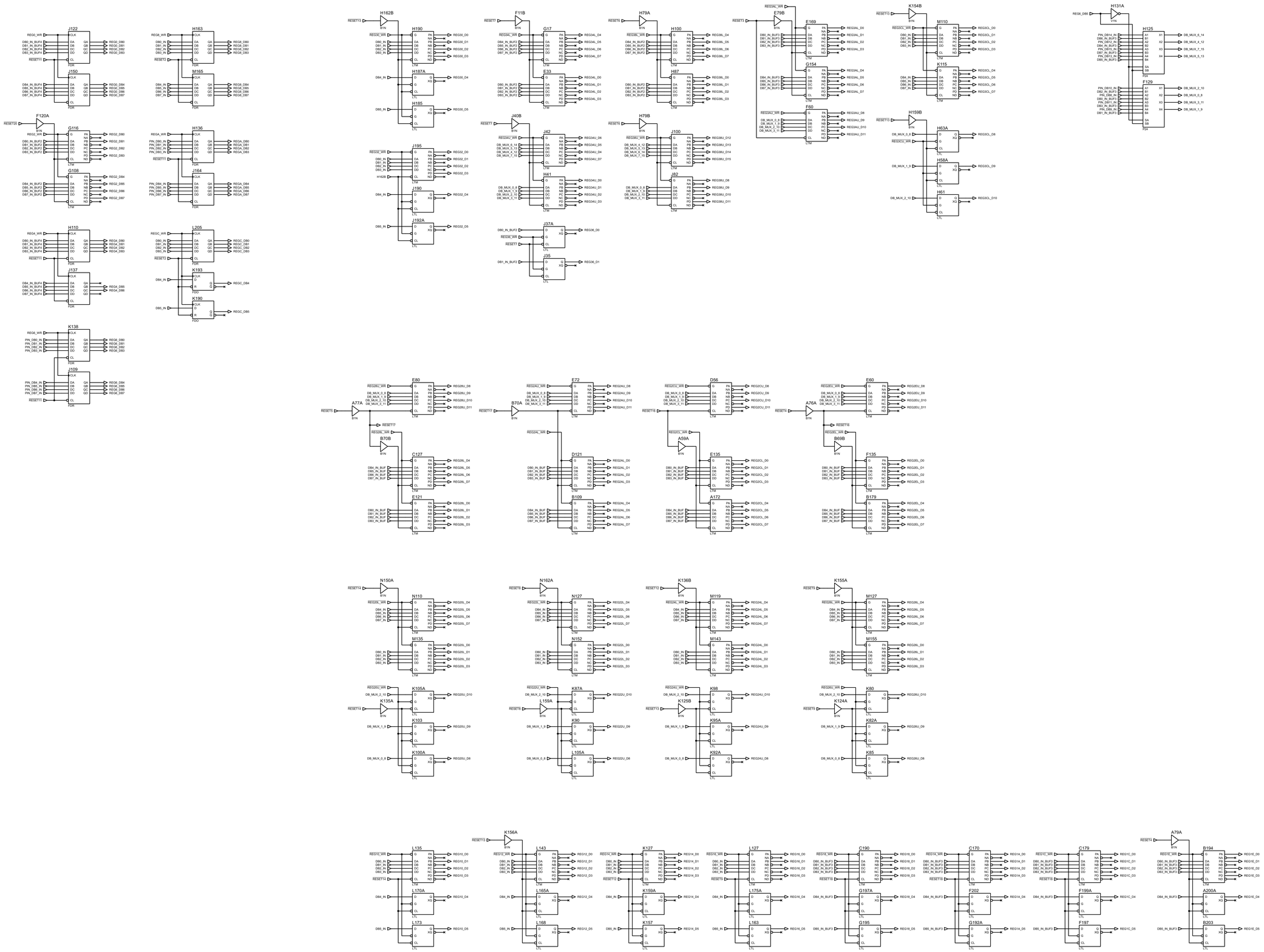

TITLE:	DATE:
Konami 054156 REGISTERS	4/13/2026
BY: Sean Gonsalves REV: A	PAGE: 2/12

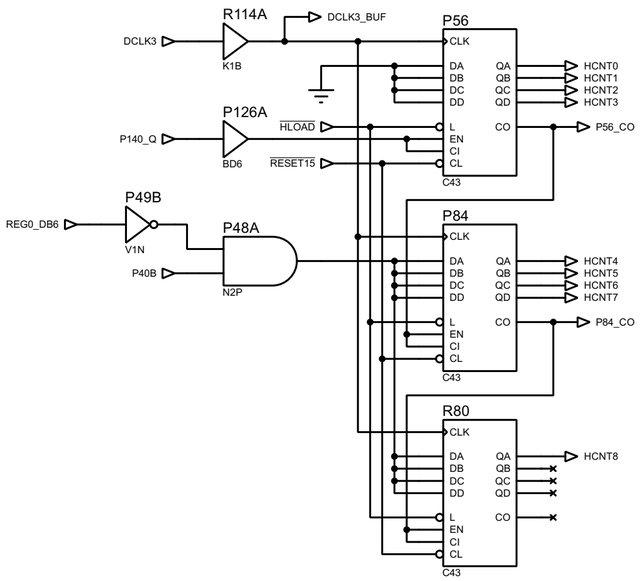

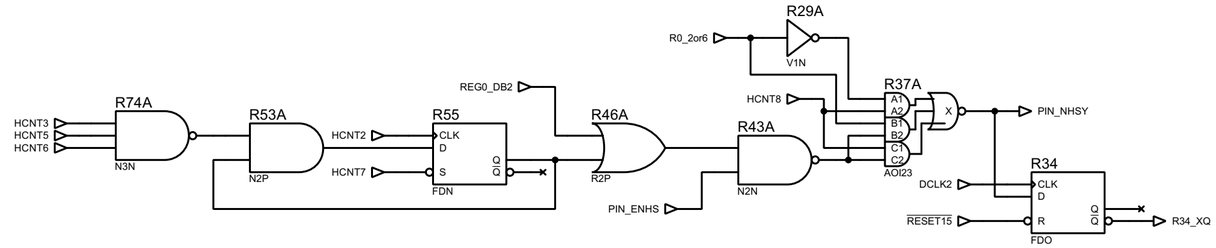

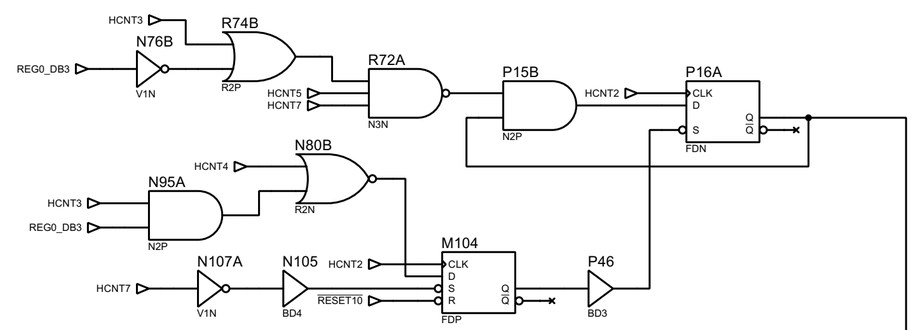

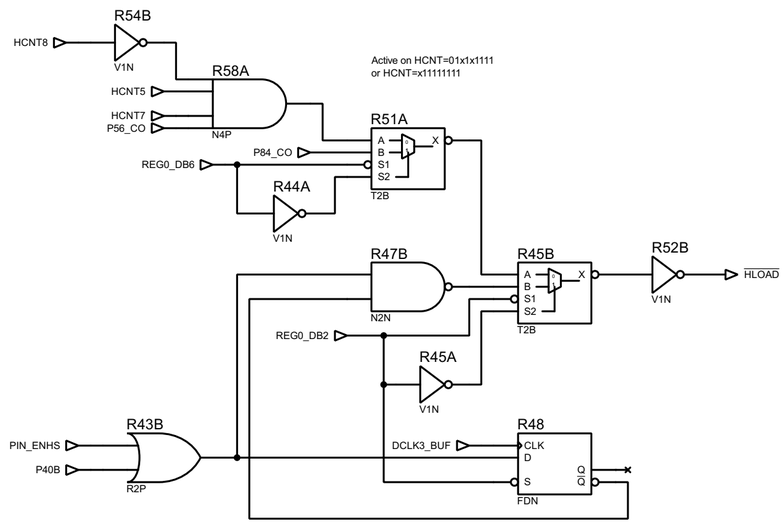

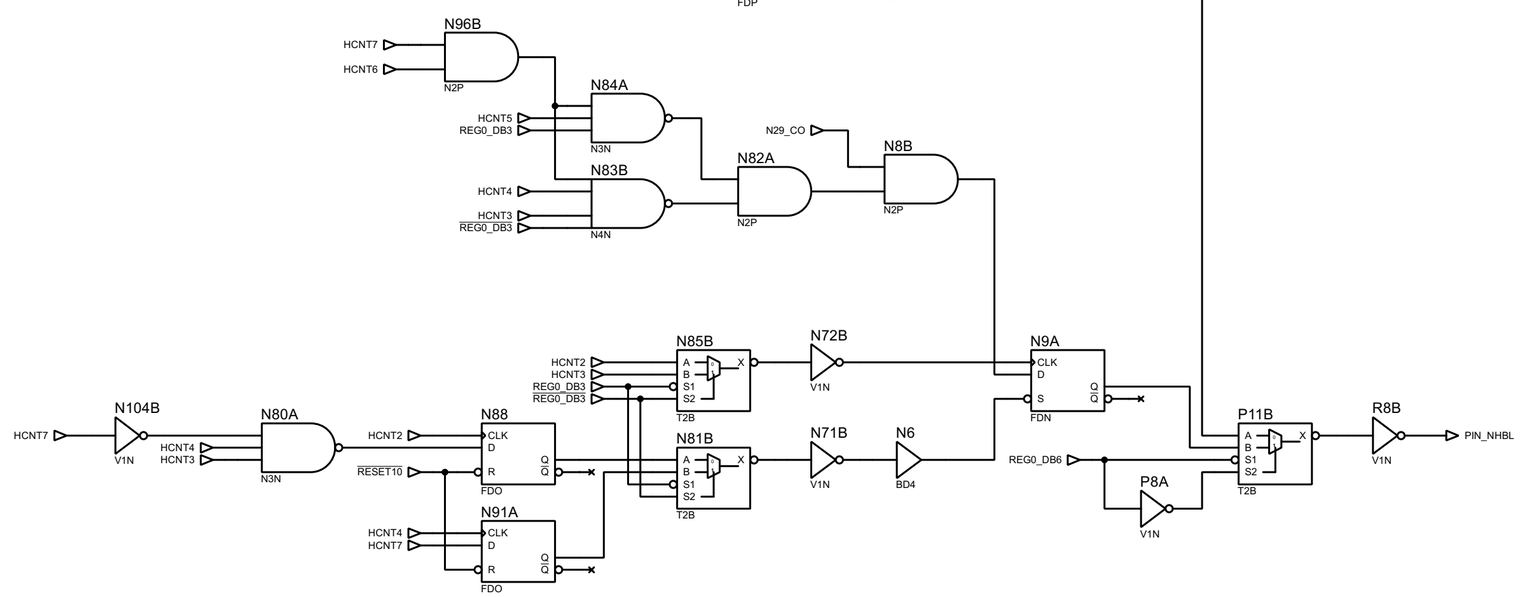

TITLE:	DATE:
Konami 054156 HORIZONTAL	4/13/2026
BY: Sean Gonsalves REV: A	PAGE: 3/12

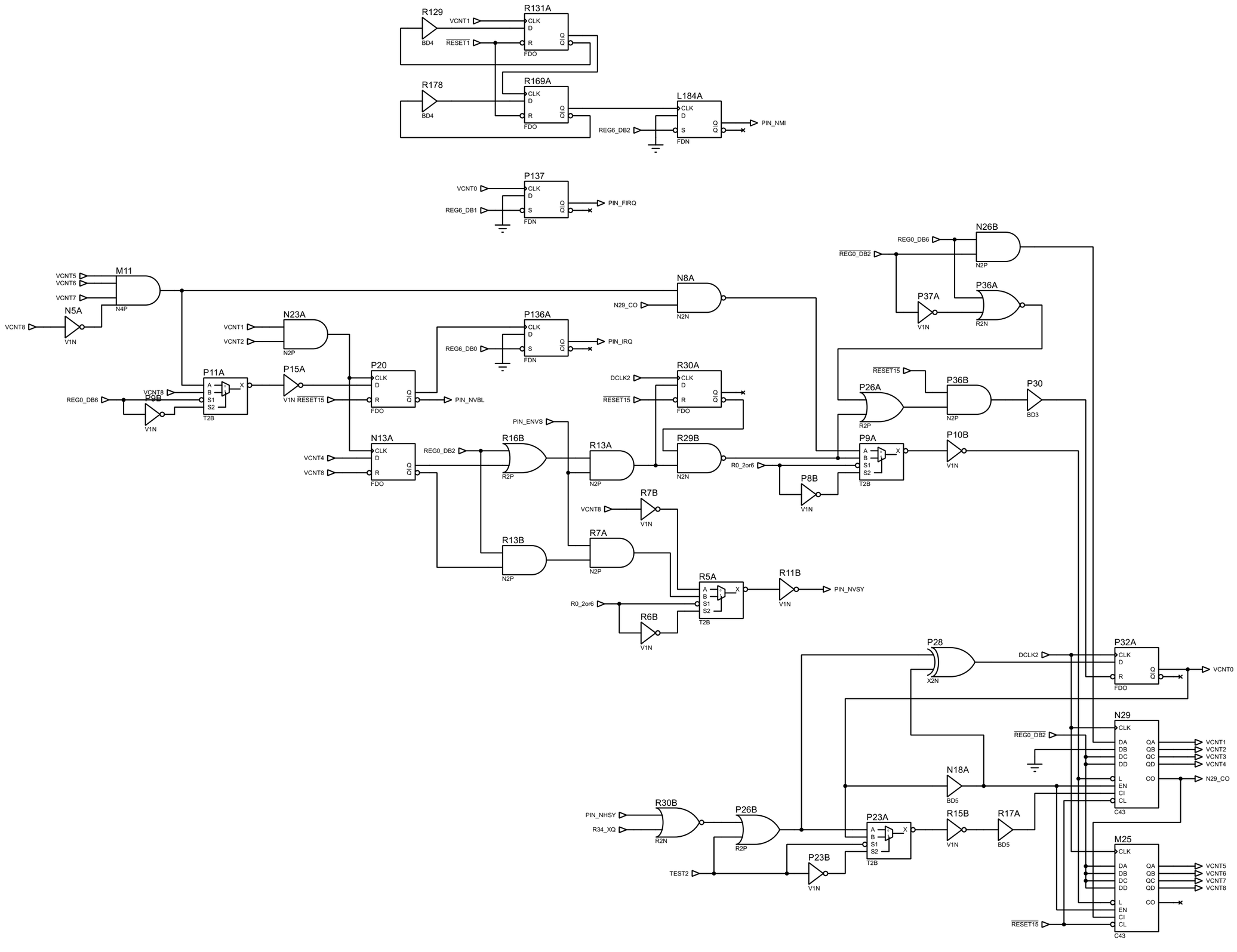

TITLE:	DATE:
Konami 054156 VERTICAL	4/13/2026
BY: Sean Gonsalves REV: A	PAGE: 4/12

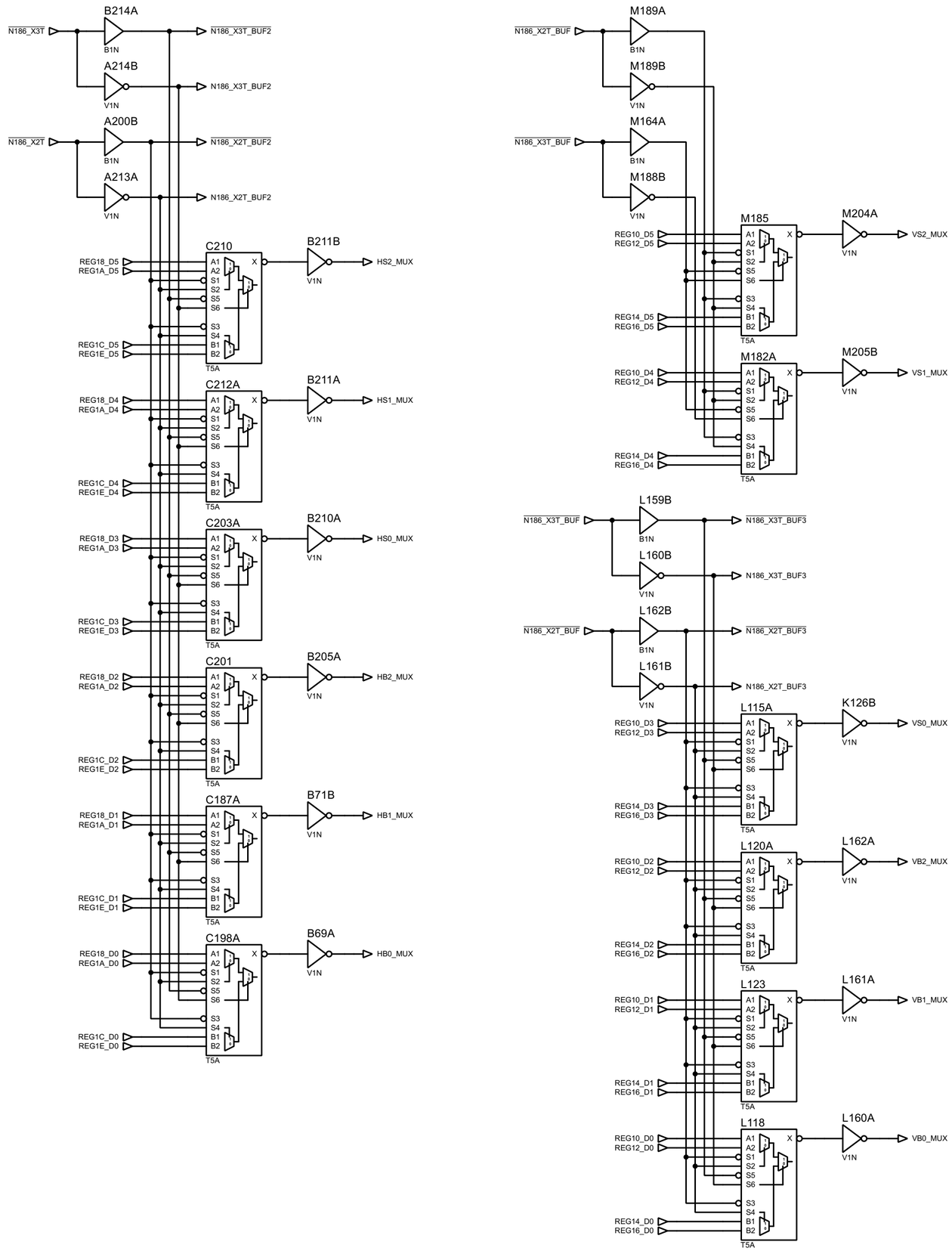

TITLE:	DATE:
Konami 054156 START / SIZE MUX	4/13/2026
BY: Sean Gonsalves REV: A	PAGE: 5/12

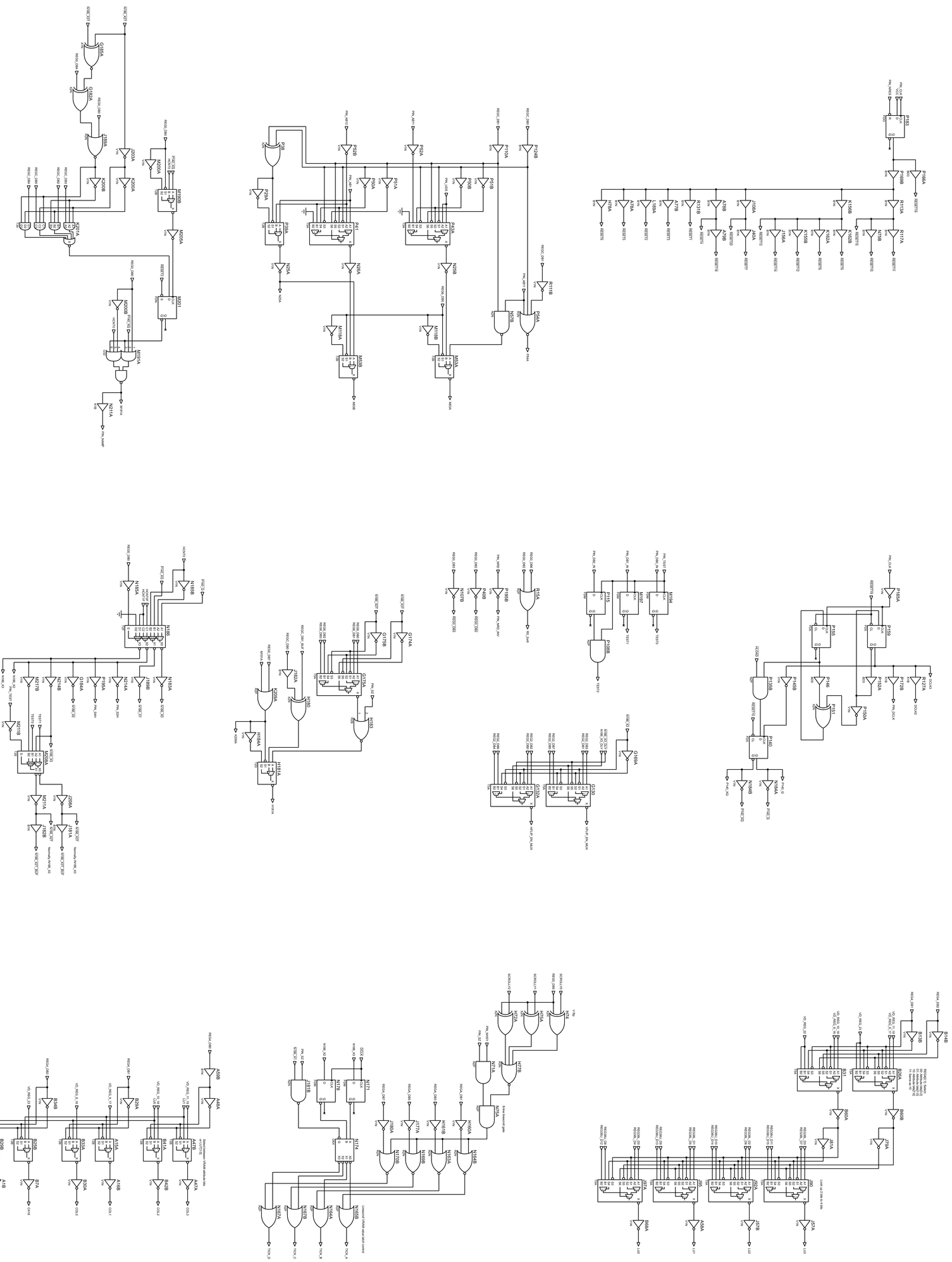

TITLE: Konami 654156 MISC	SIZE: 41/32/26
BY: Sean Gonsalves REV: A	PAGE: 6/12

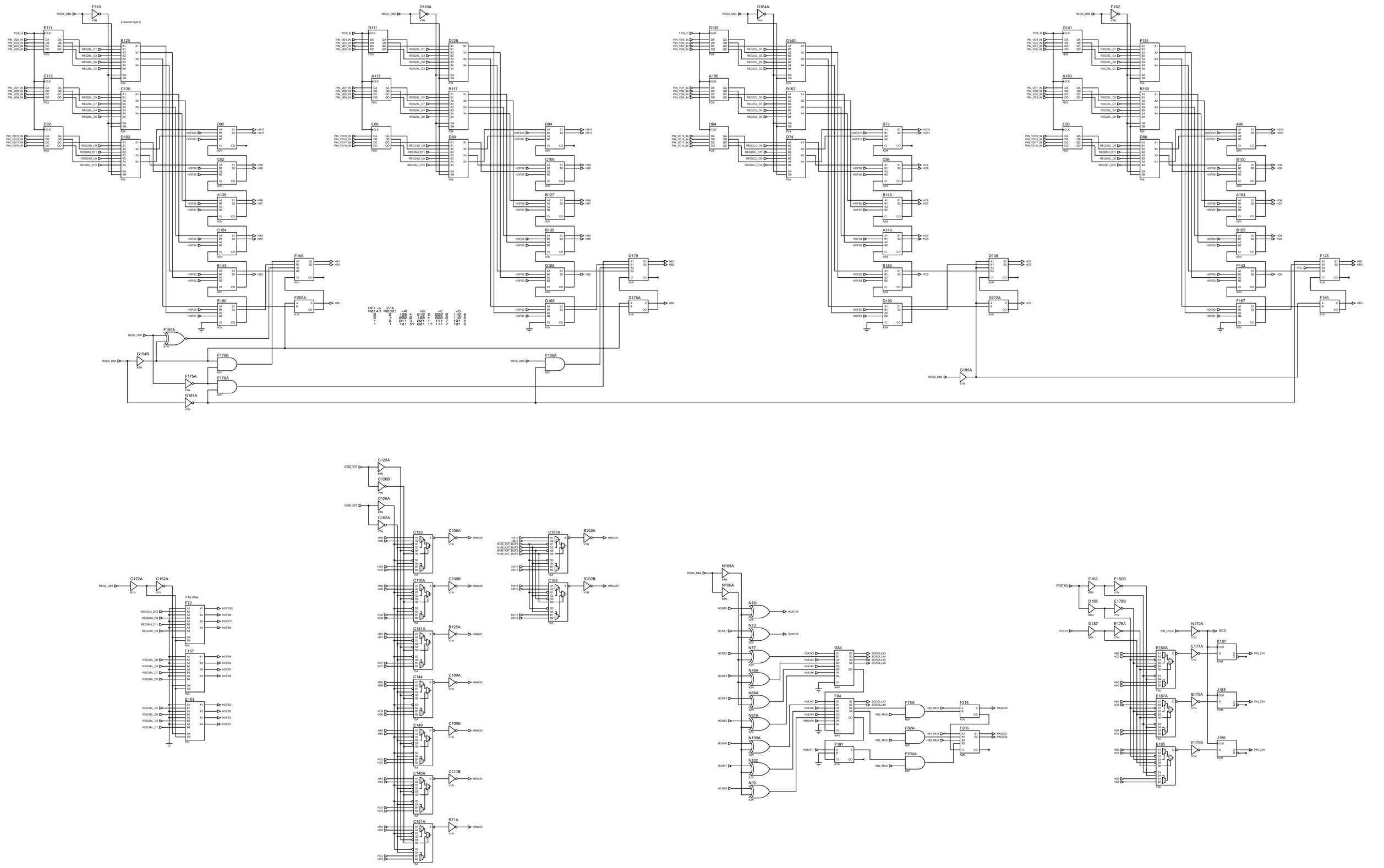

TITLE:	DATE:
Konami 054156 SCROLL X	4/13/2026
BY: Sean Gonsalves REV: A	PAGE: 7/12

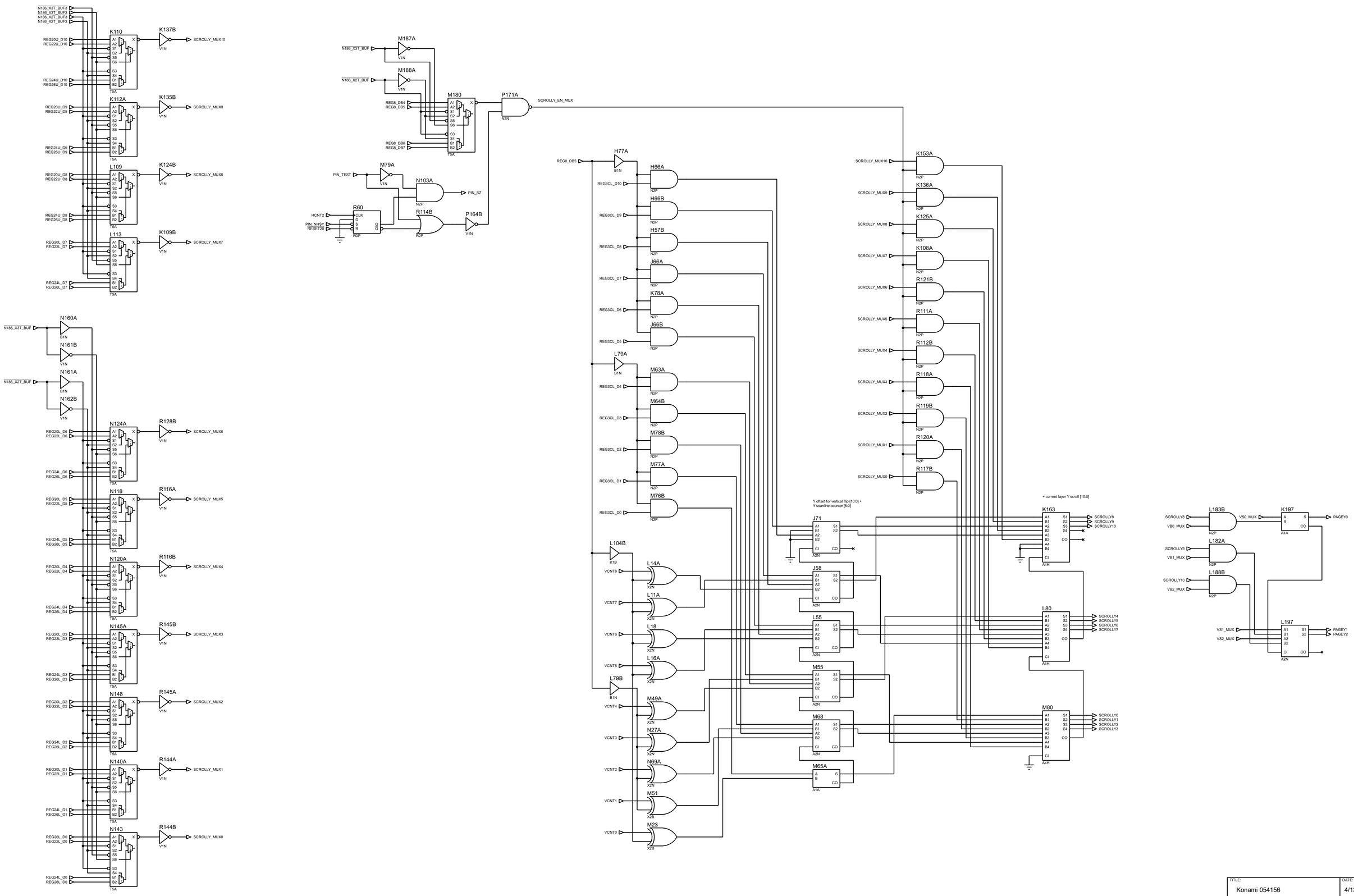

TITLE:	DATE:
Konami 054156 SCROLL Y	4/13/2026
BY: Sean Gonsalves REV: A	PAGE: 8/12

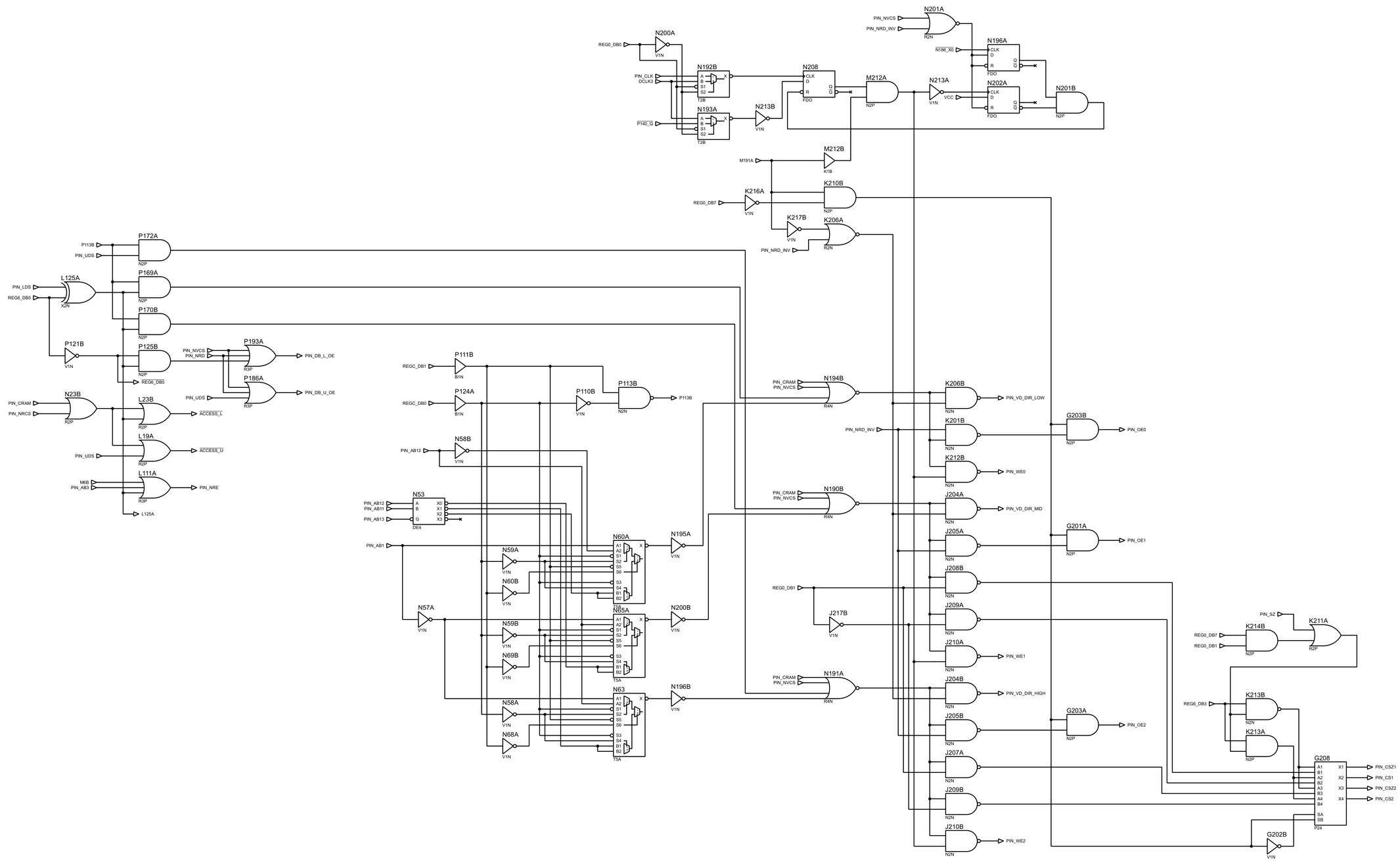

TITLE:	DATE:
Konami 054156 VRAM CONTROL	4/13/2026
BY: Sean Gonsalves REV: A	PAGE: 9/12

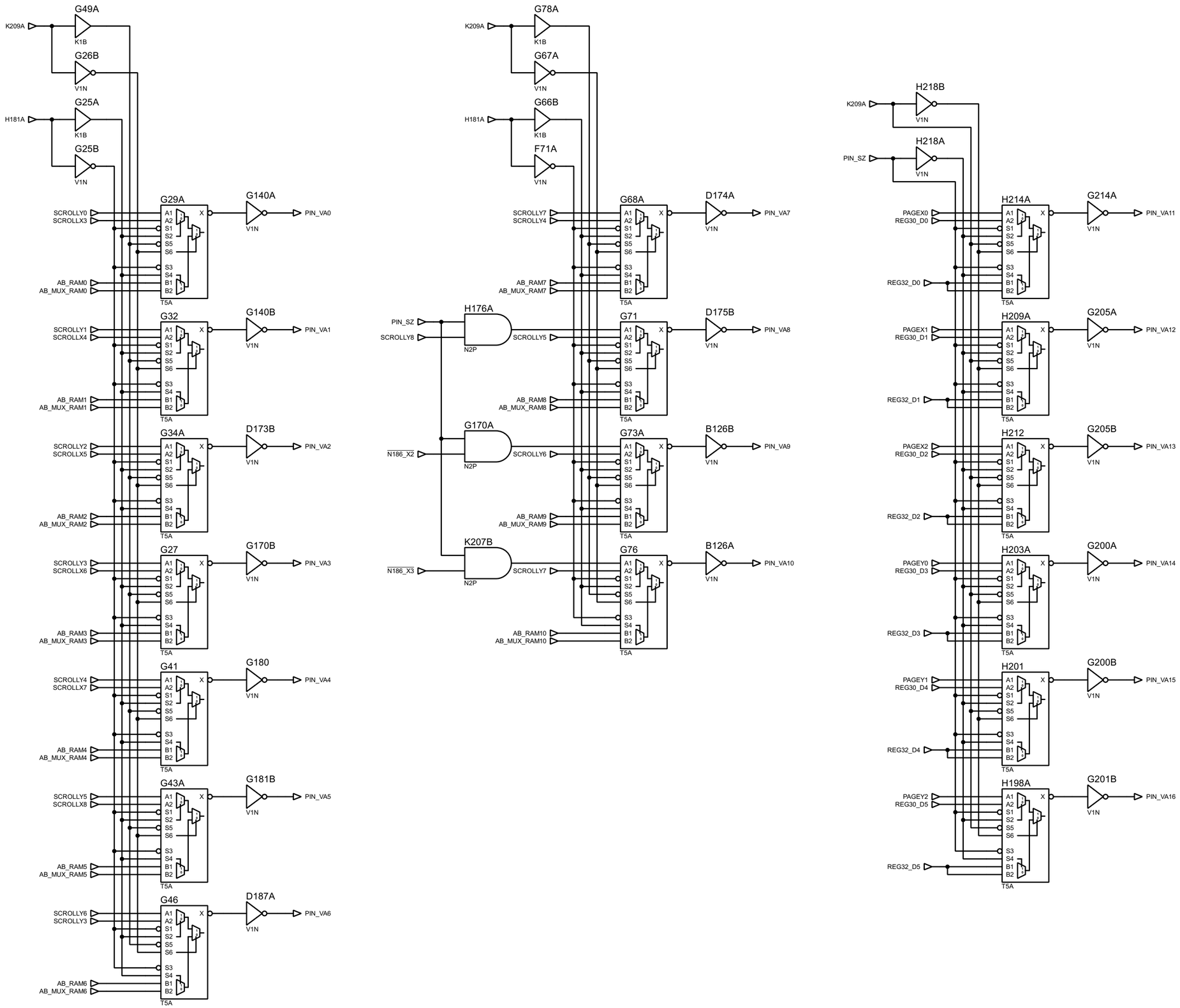

TITLE:	DATE:
Konami 054156 VRAM ADDRESS	4/13/2026
BY: Sean Gonsalves REV: A	PAGE: 10/12

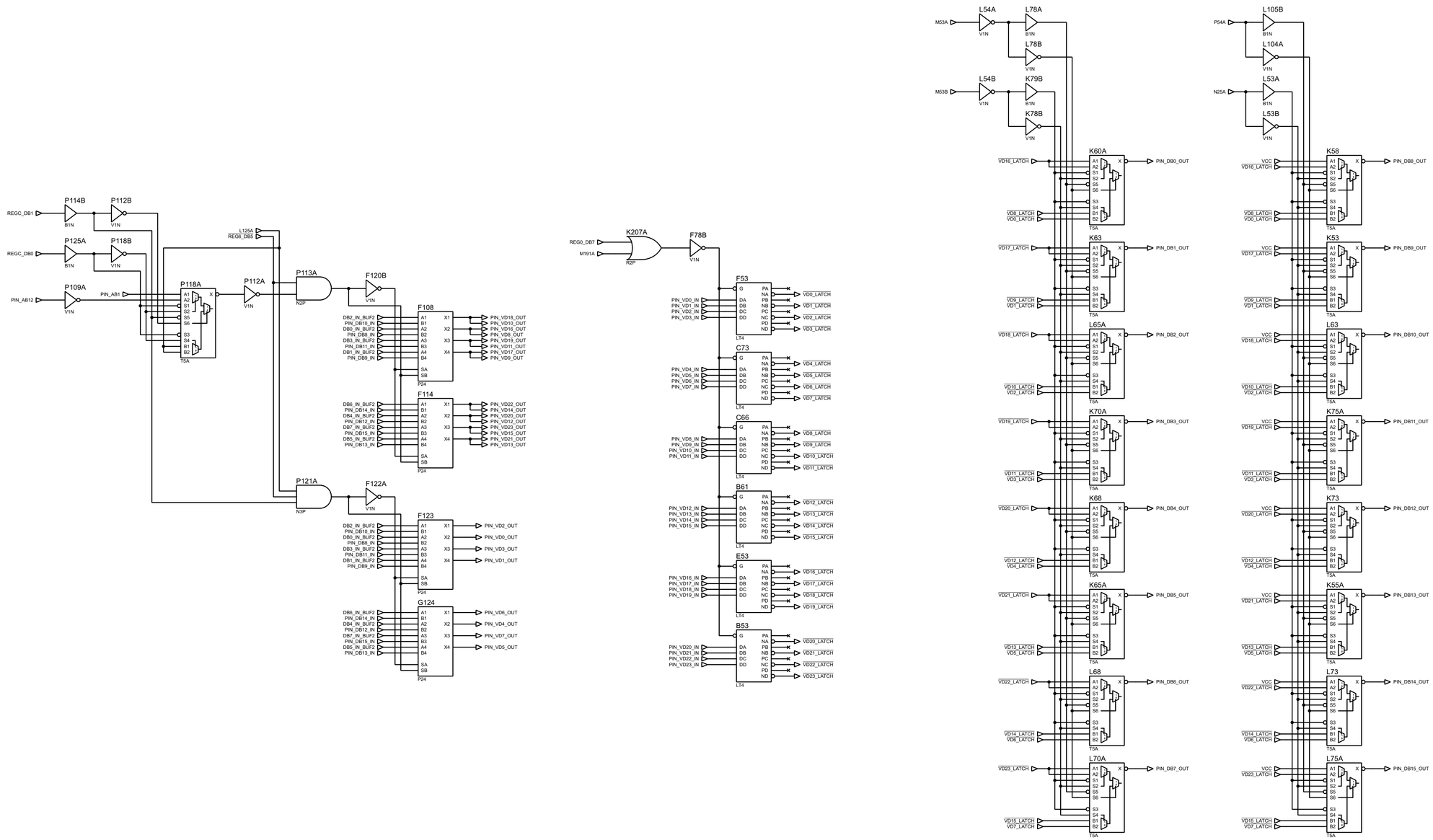

TITLE:	DATE:
Konami 054156 VRAM DATA	4/13/2026
BY: Sean Gonsalves REV: A	PAGE: 11/12

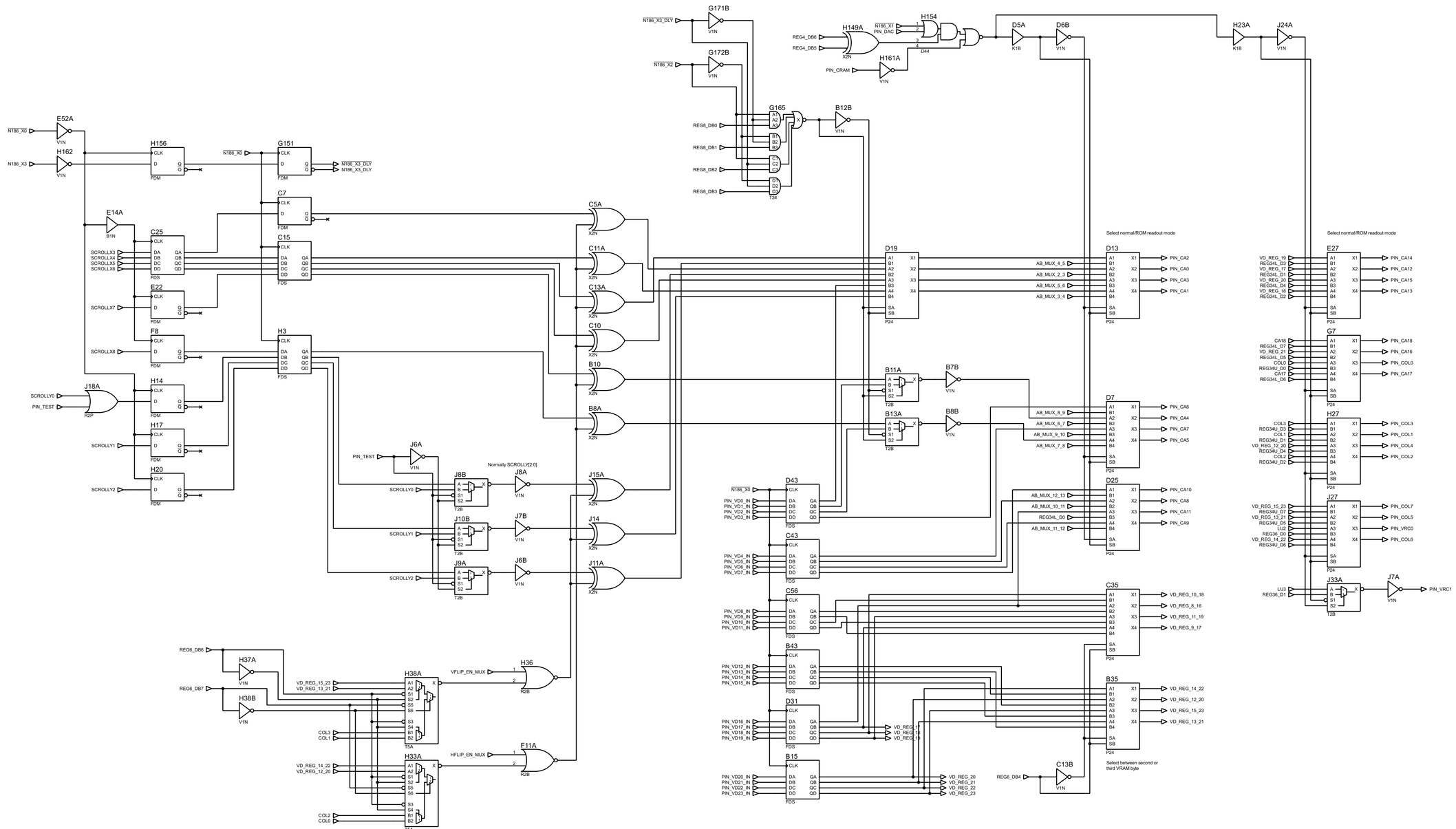

TITLE:	DATE:
Konami 054156 OUTPUTS	4/13/2026
BY: Sean Gonsalves REV: A	PAGE: 12/12