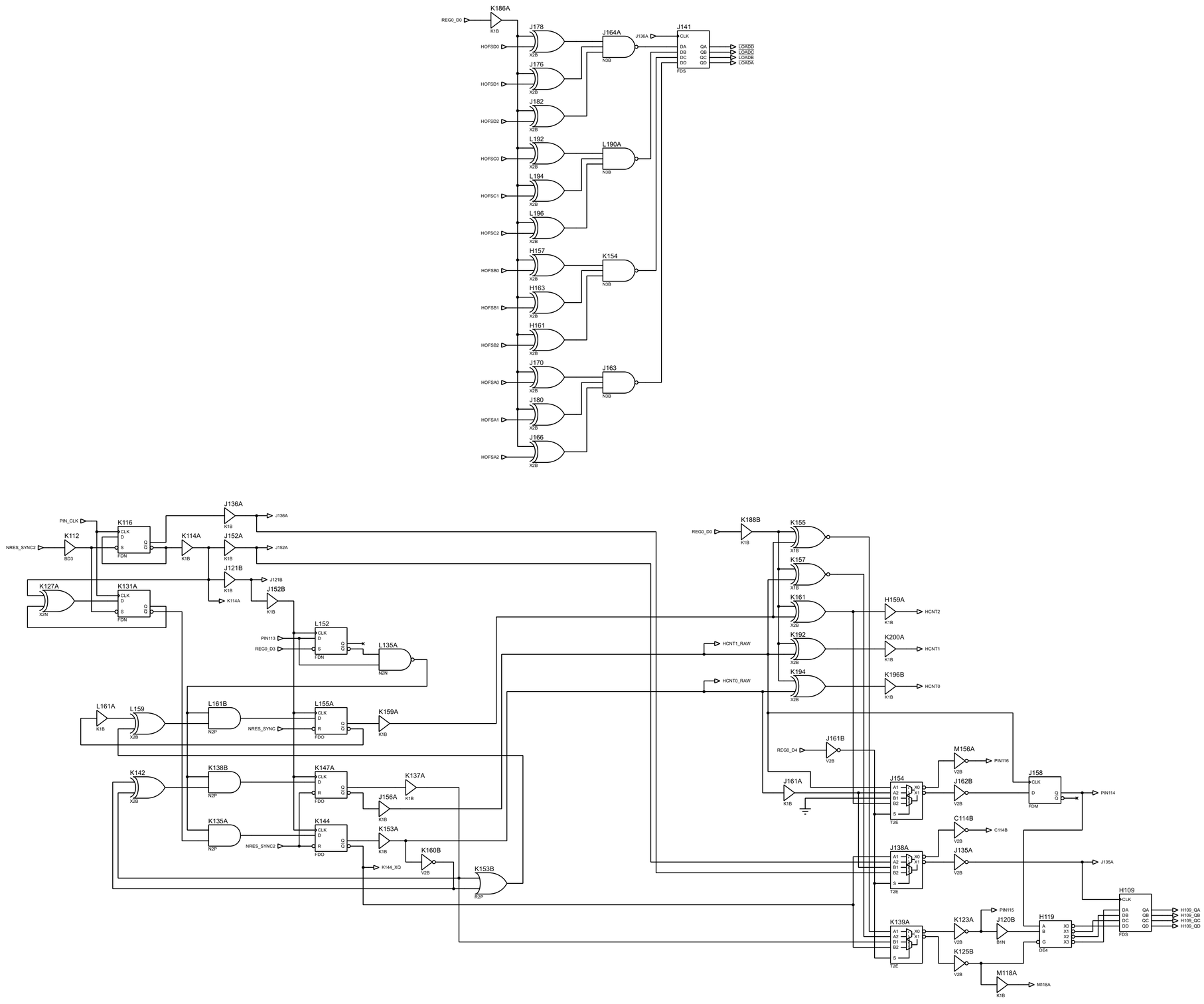

TITLE:	DATE:
Konami 054157 CLOCK / PIXEL COUNTER	4/13/2026
BY: Sean Gonsalves REV: A	PAGE: 1/11

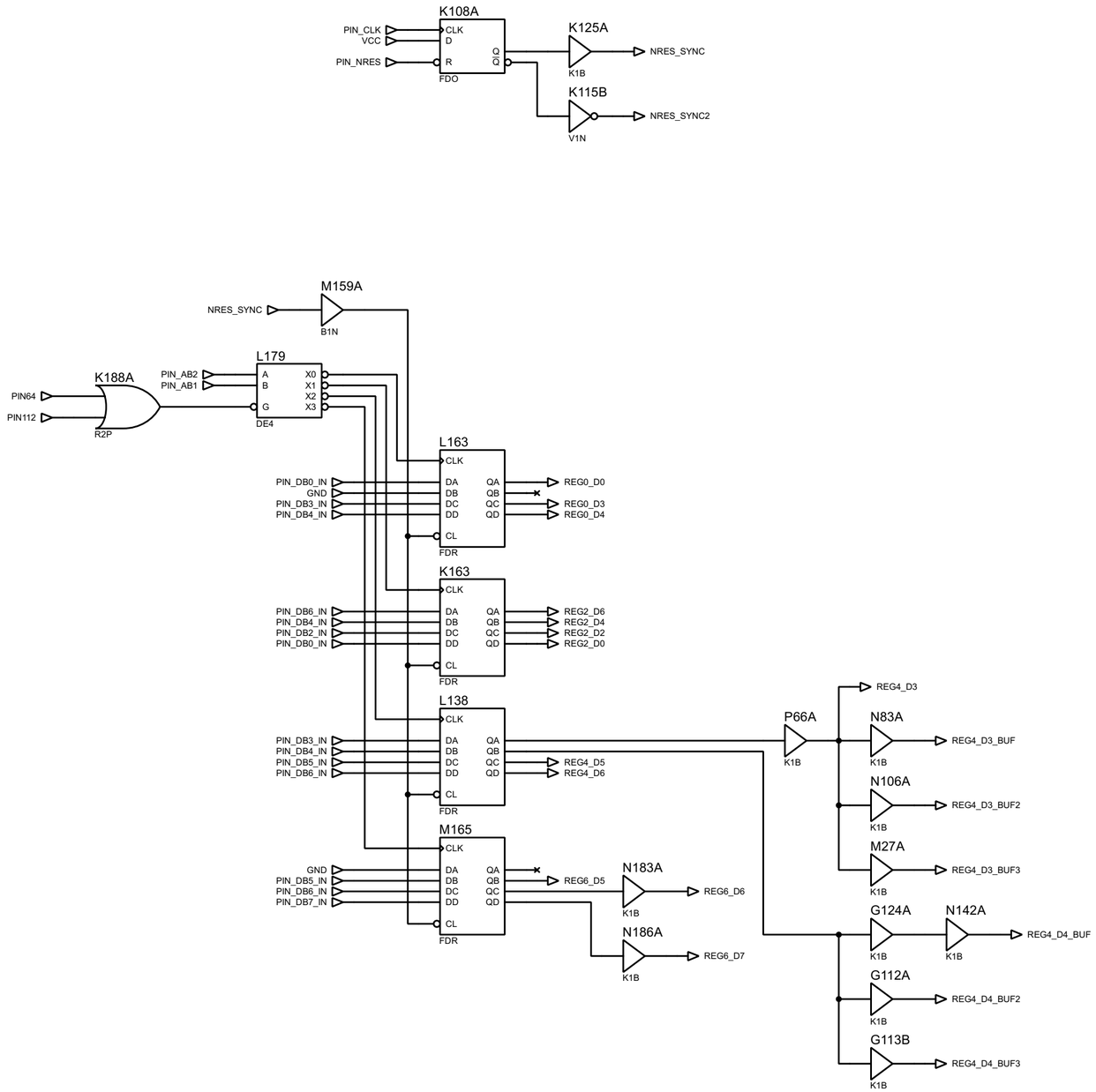

TITLE:	DATE:
Konami 054157 REGISTERS	4/13/2026
BY: Sean Gonsalves REV: A	PAGE: 2/11

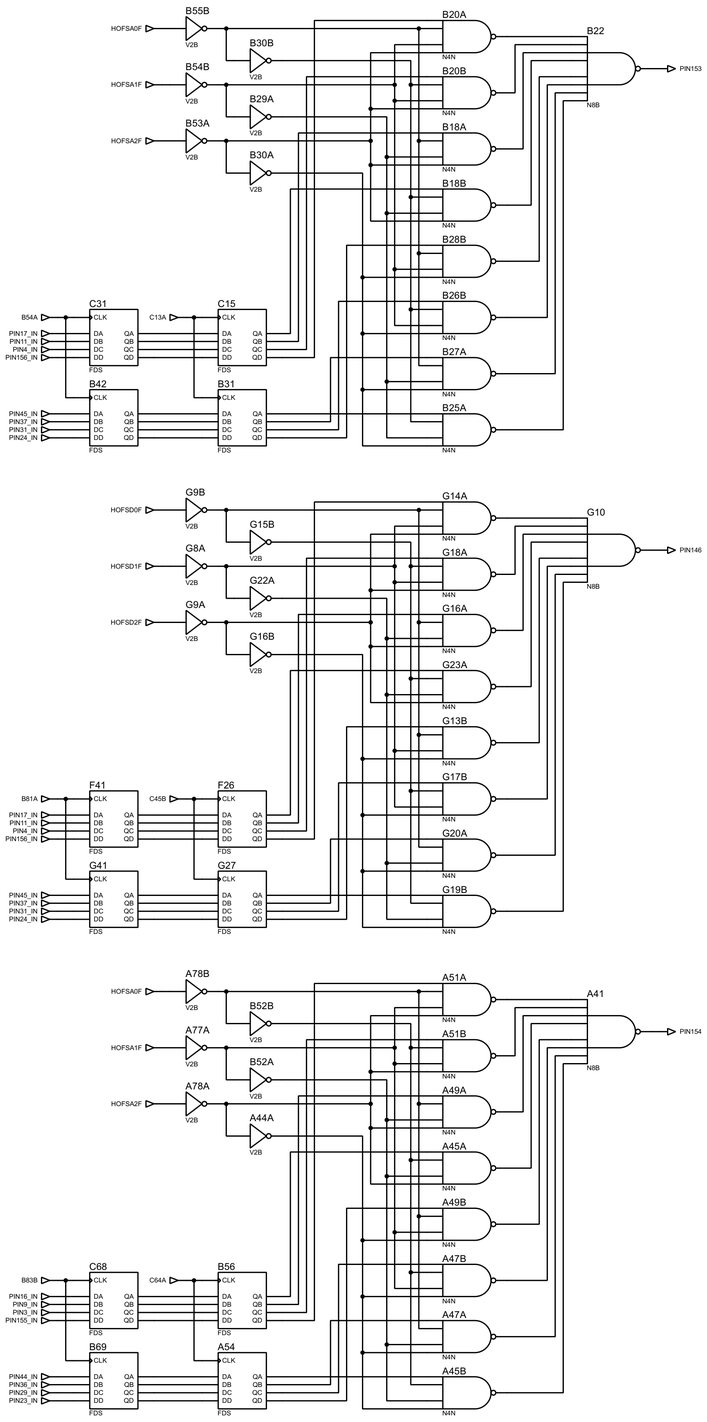

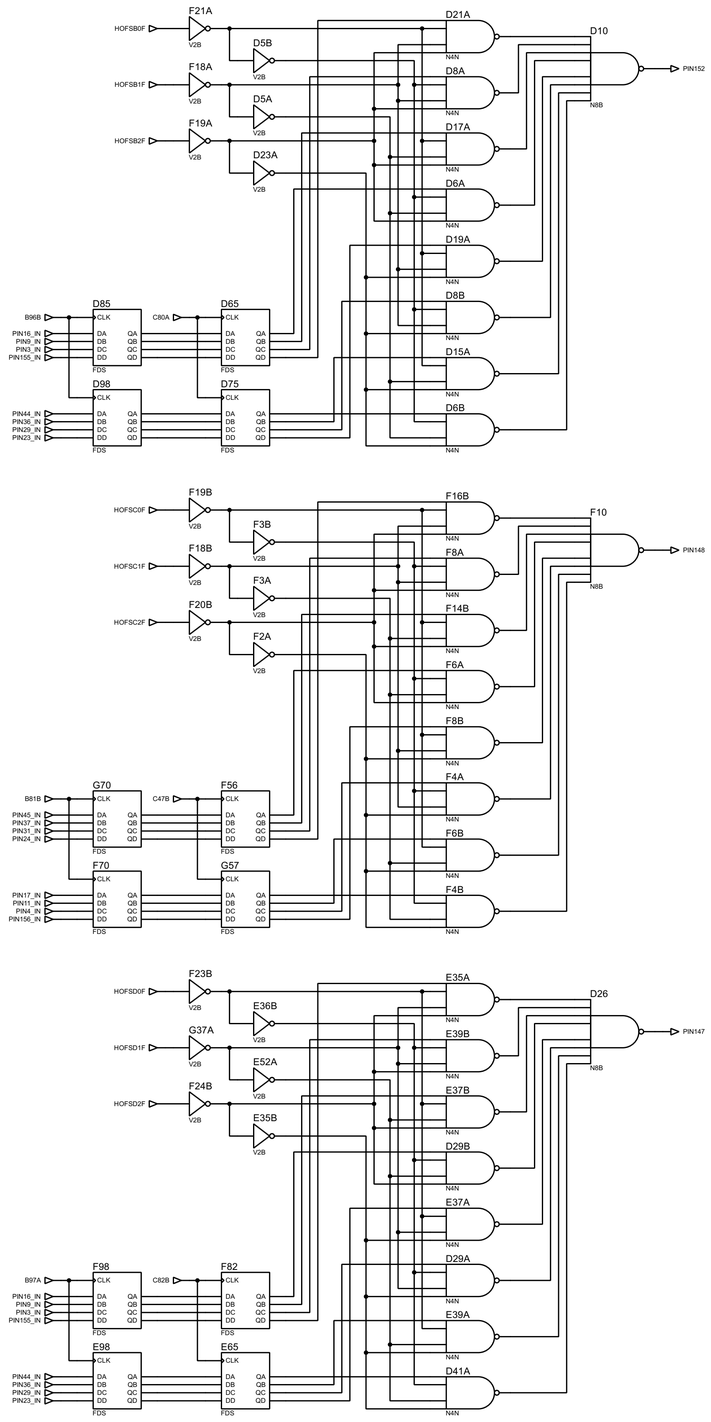

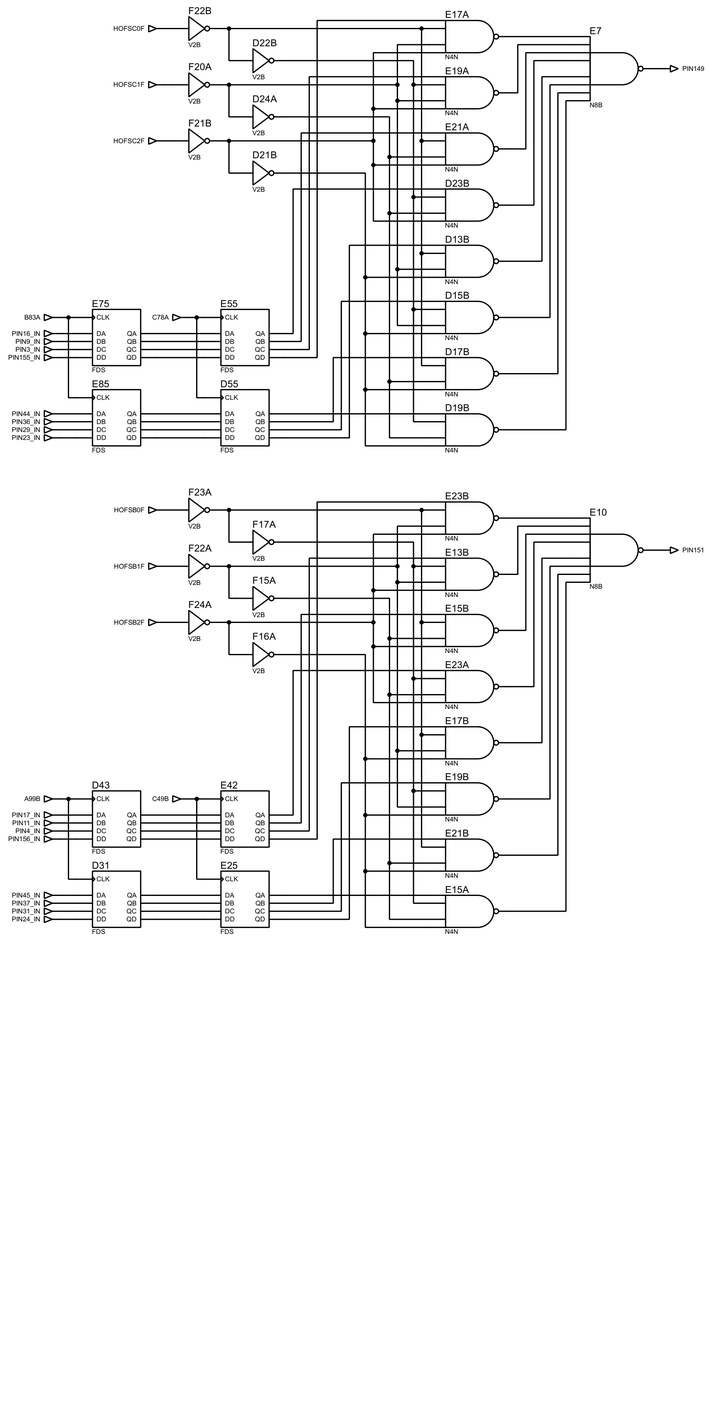

TITLE:	DATE:
Konami 054157 LOWER COLOR BITS	4/13/2026
BY: Sean Gonsalves REV: A	PAGE: 3/11

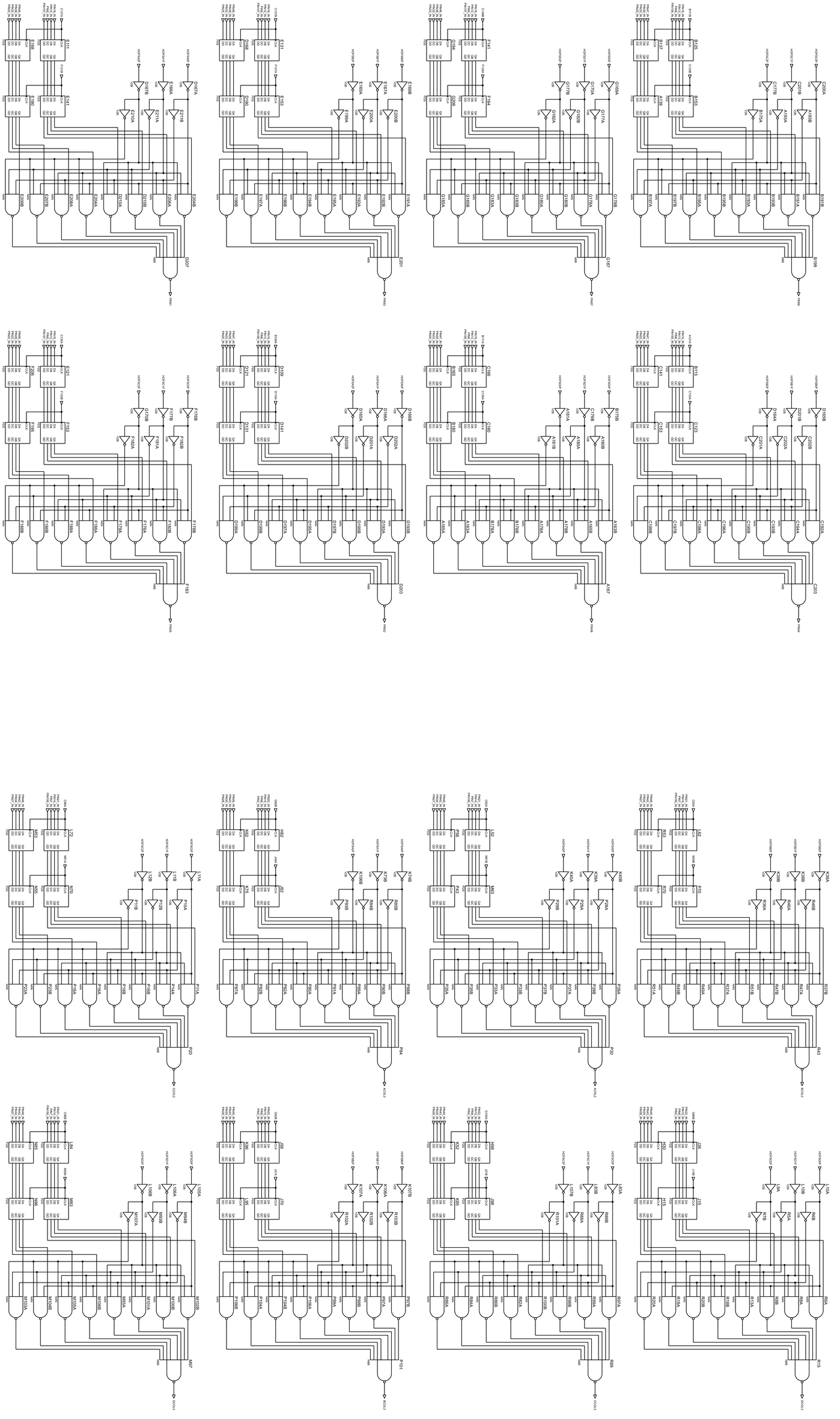

TITLE: Konami 054157 UPPER COLOR BITS	DATE: 4/13/2026
SH: Sean O'Donnell REV: A	PAGE: 4/11

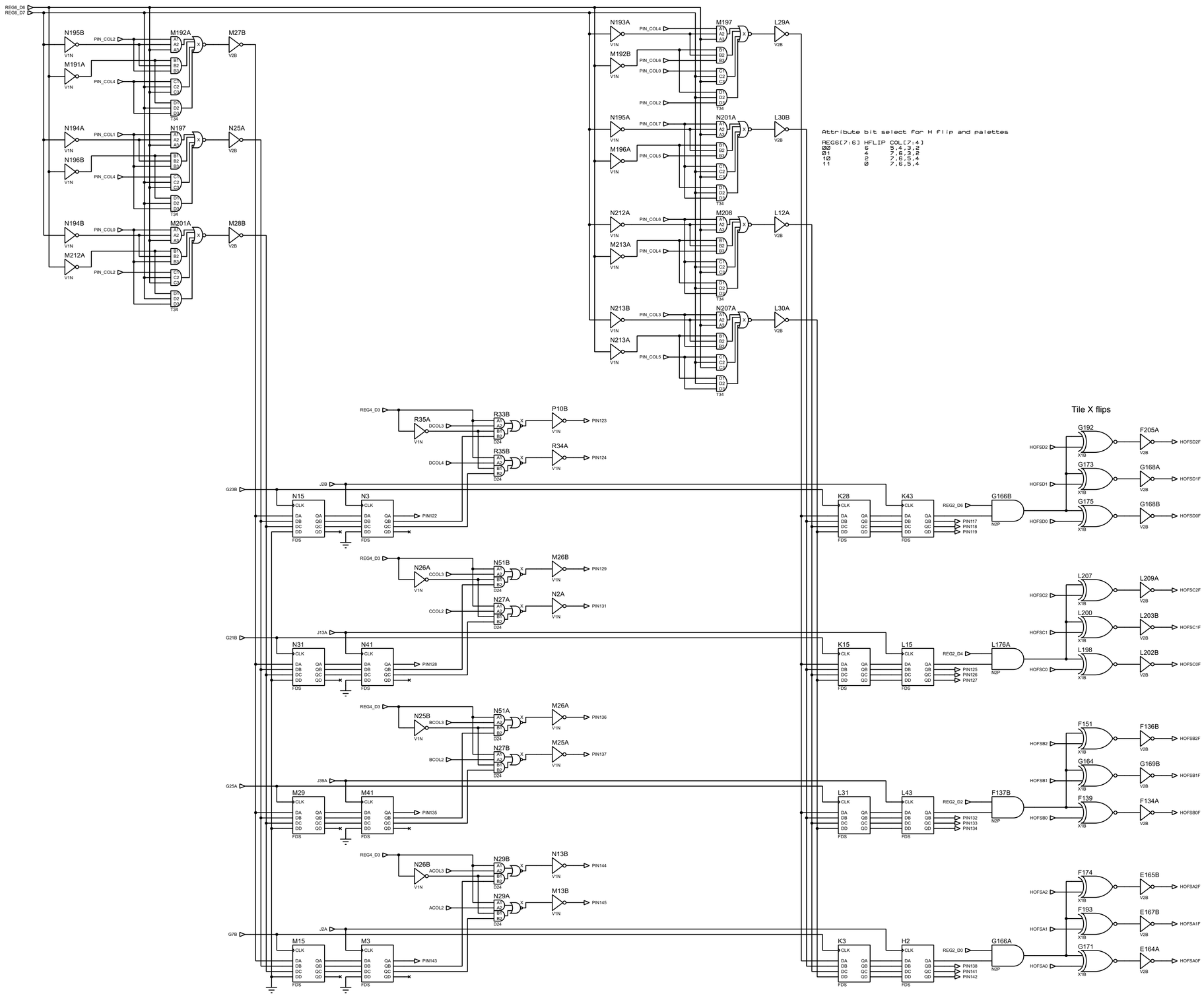

TITLE:	DATE:
Konami 054157 ATTRIBUTE BITS	4/13/2026
BY: Sean Gonsalves REV: A	PAGE: 5/11

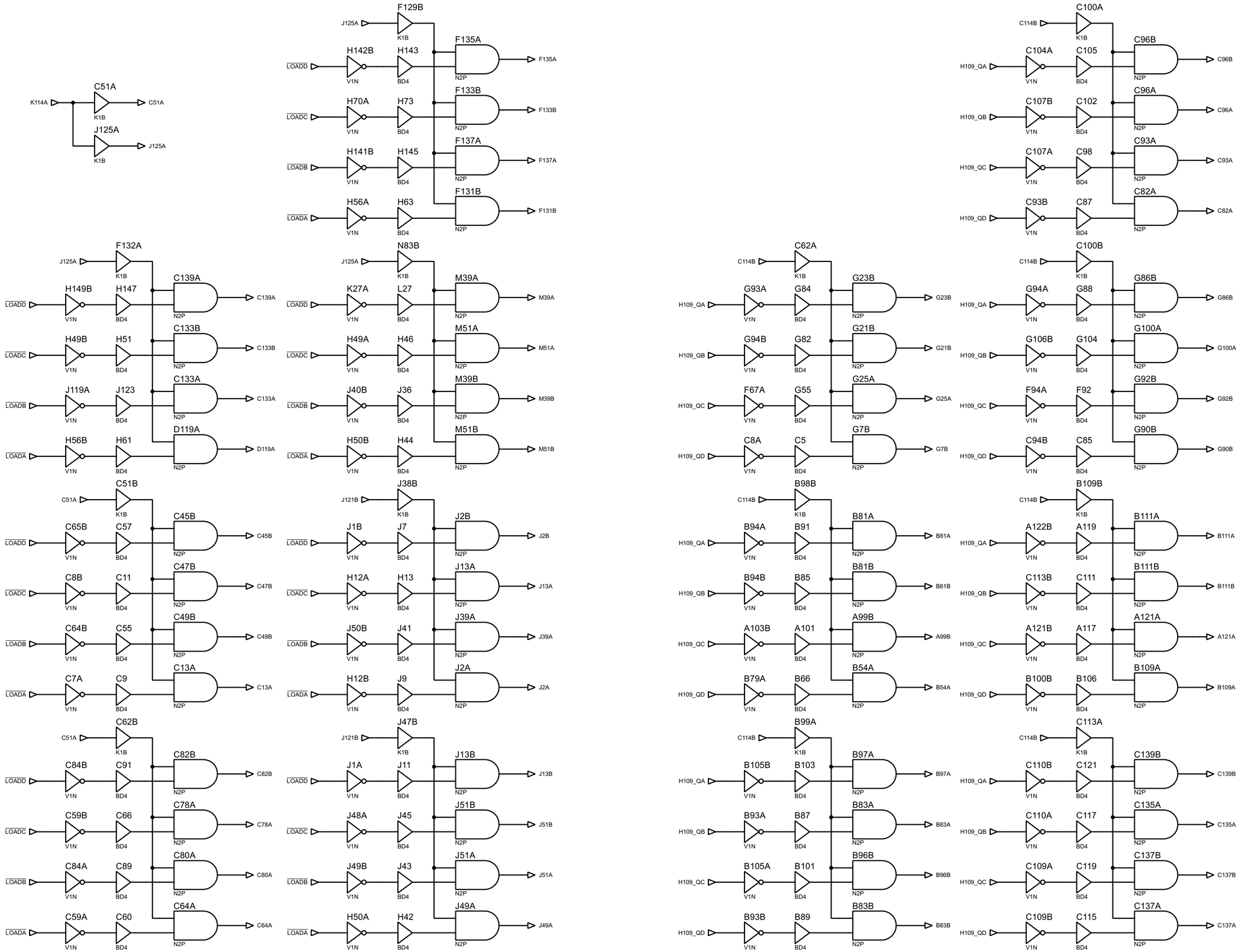

TITLE:	DATE:
Konami 054157 DATA LATCH TRIGGERS	4/13/2026
BY: Sean Gonsalves REV: A	PAGE: 6/11

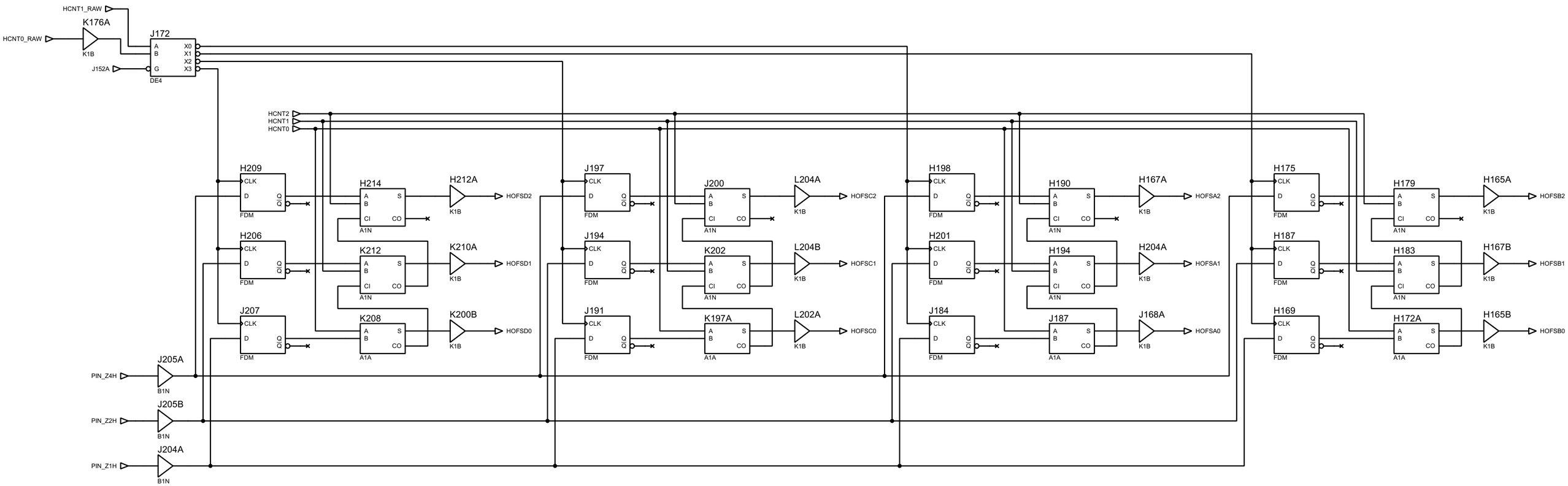

TITLE:	DATE:
Konami 054157 H OFFSET	4/13/2026
BY: Sean Gonsalves REV: A	PAGE: 7/11

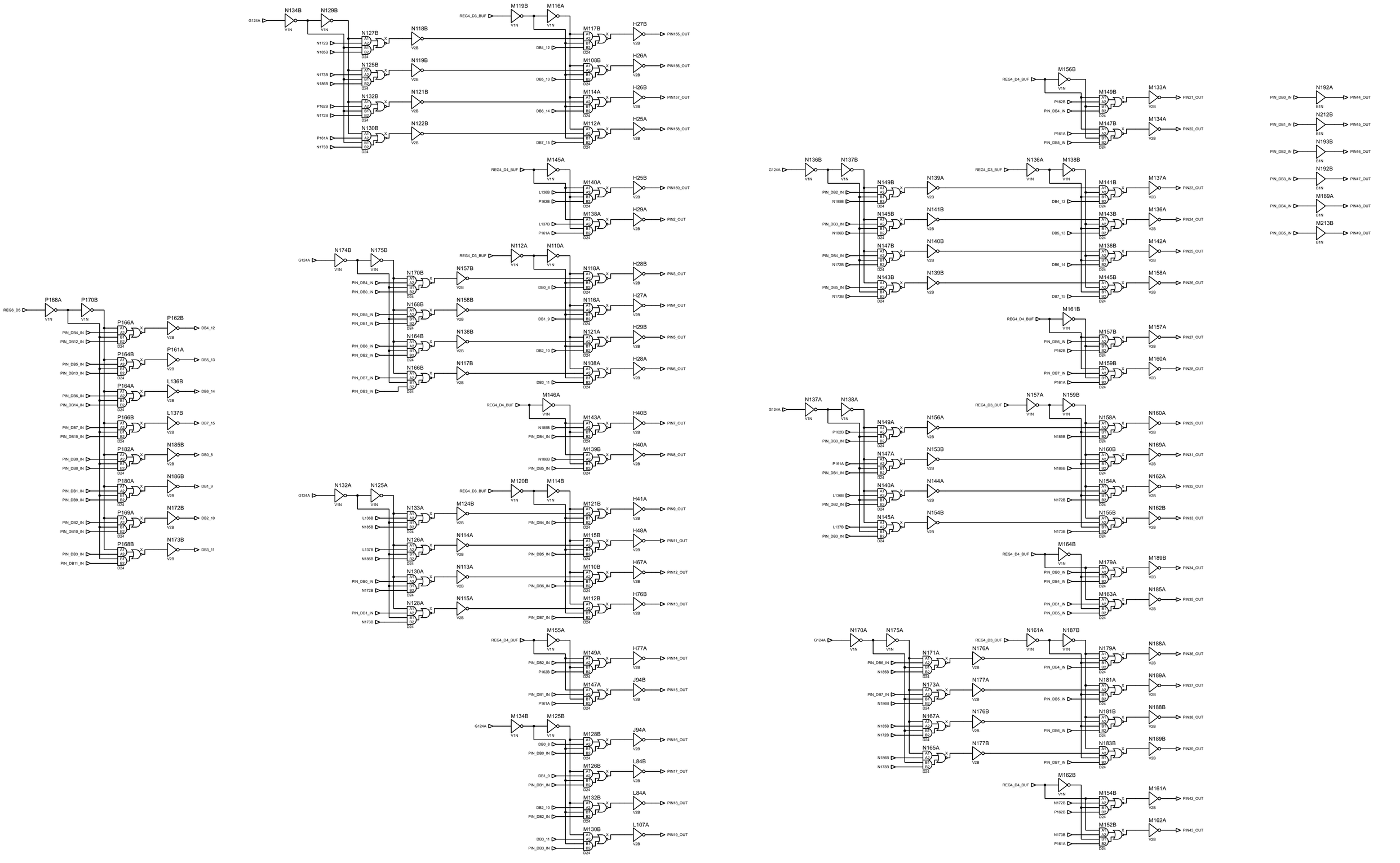

TITLE:	DATE:
Konami 054157 RAM MODE DATA MUX	4/13/2026
BY: Sean Gonsalves REV: A	PAGE: 8/11

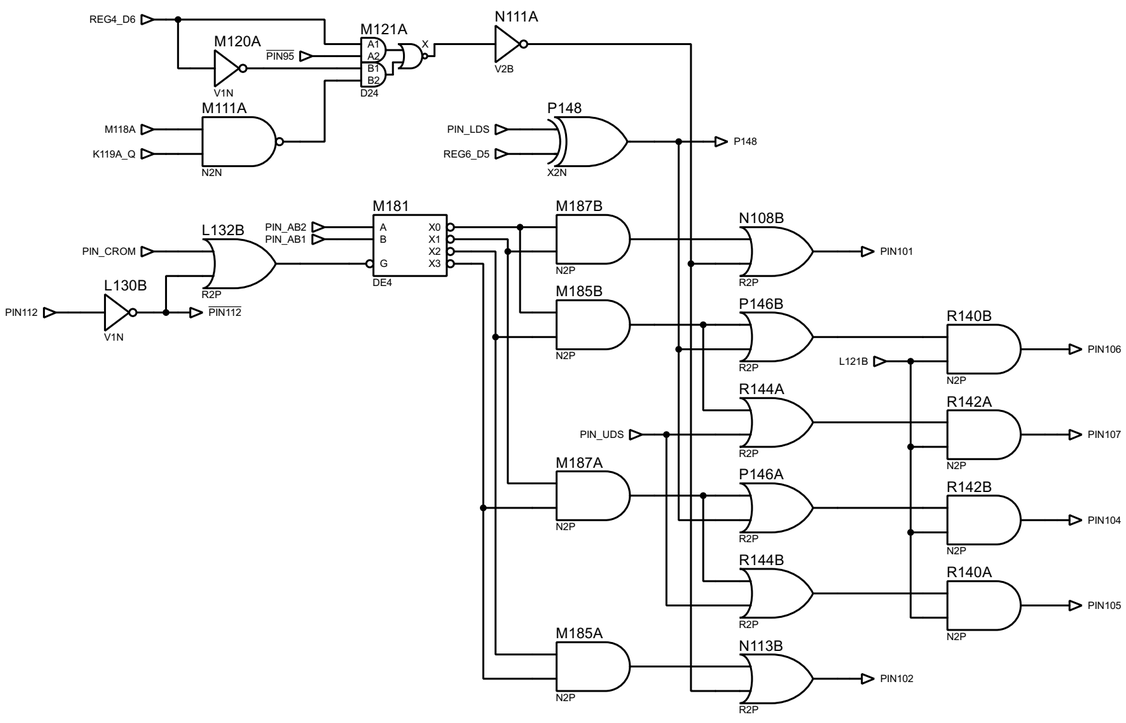

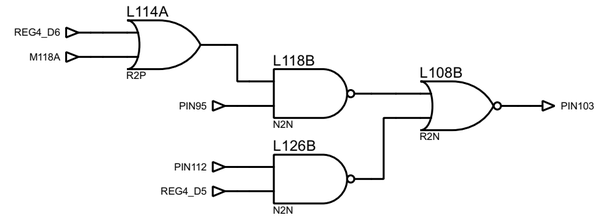

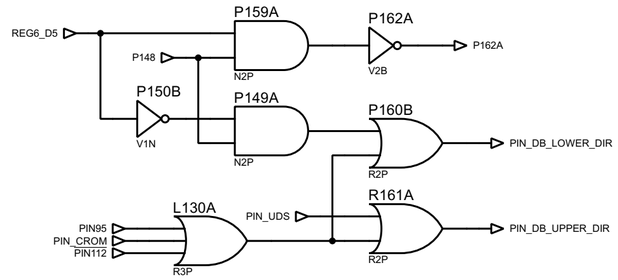

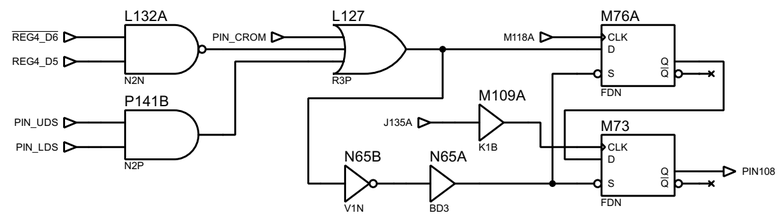

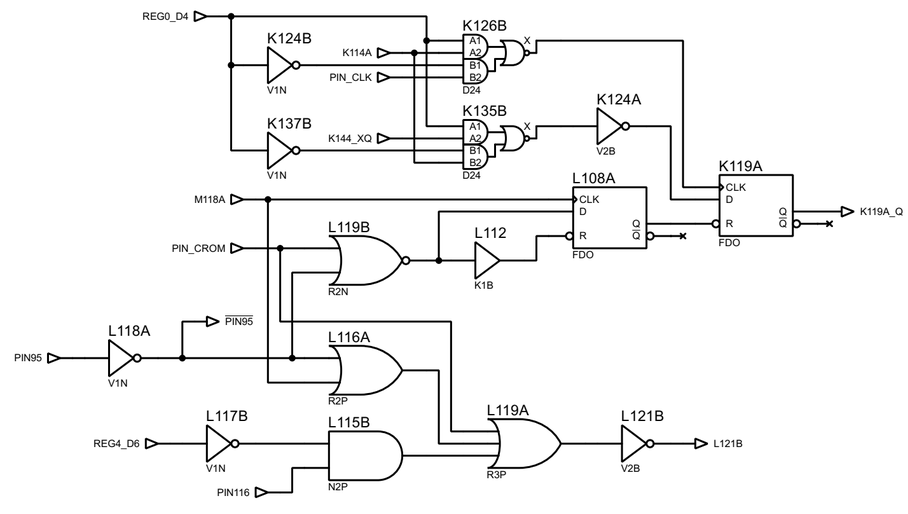

TITLE:	DATE:
Konami 054157 MISC	4/13/2026
BY: Sean Gonsalves REV: A	PAGE: 9/11

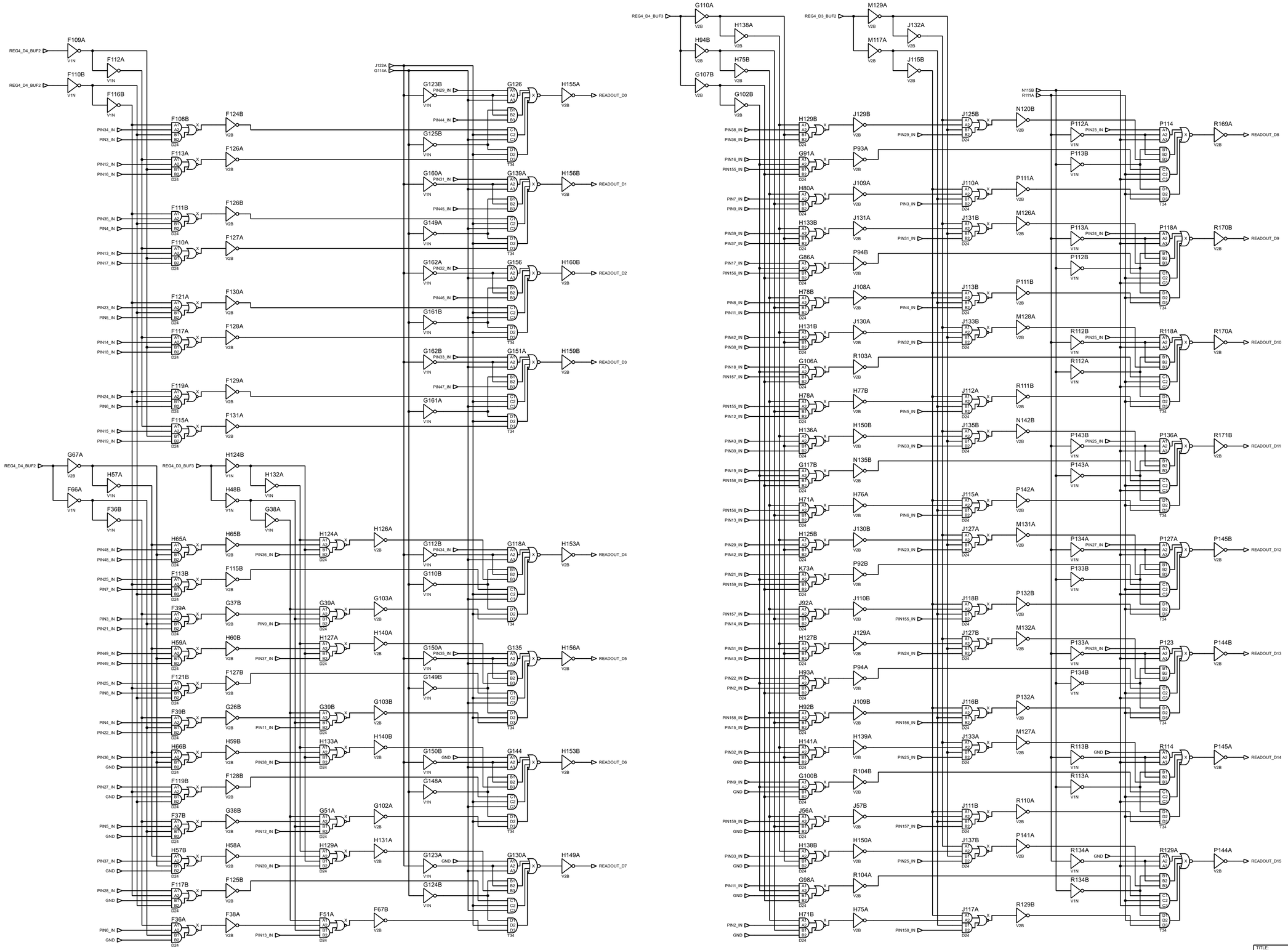

TITLE:	DATE:
Konami 054157 ROM READOUT MUX	4/13/2026
BY: Sean Gonsalves REV: A	PAGE: 10/11

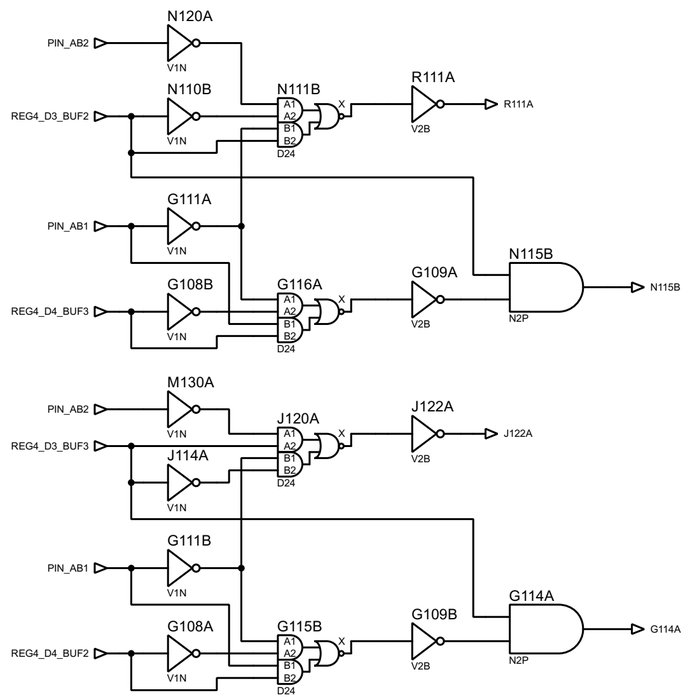

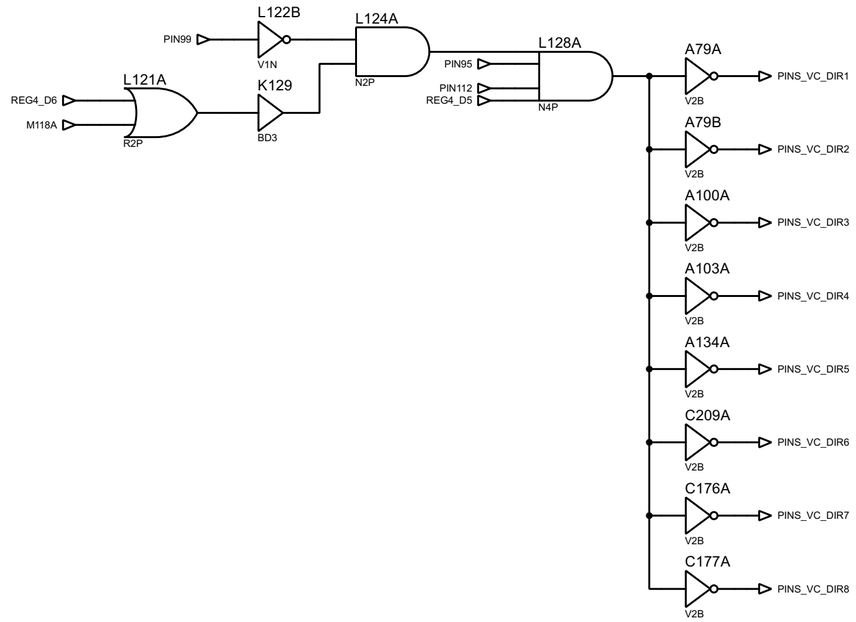

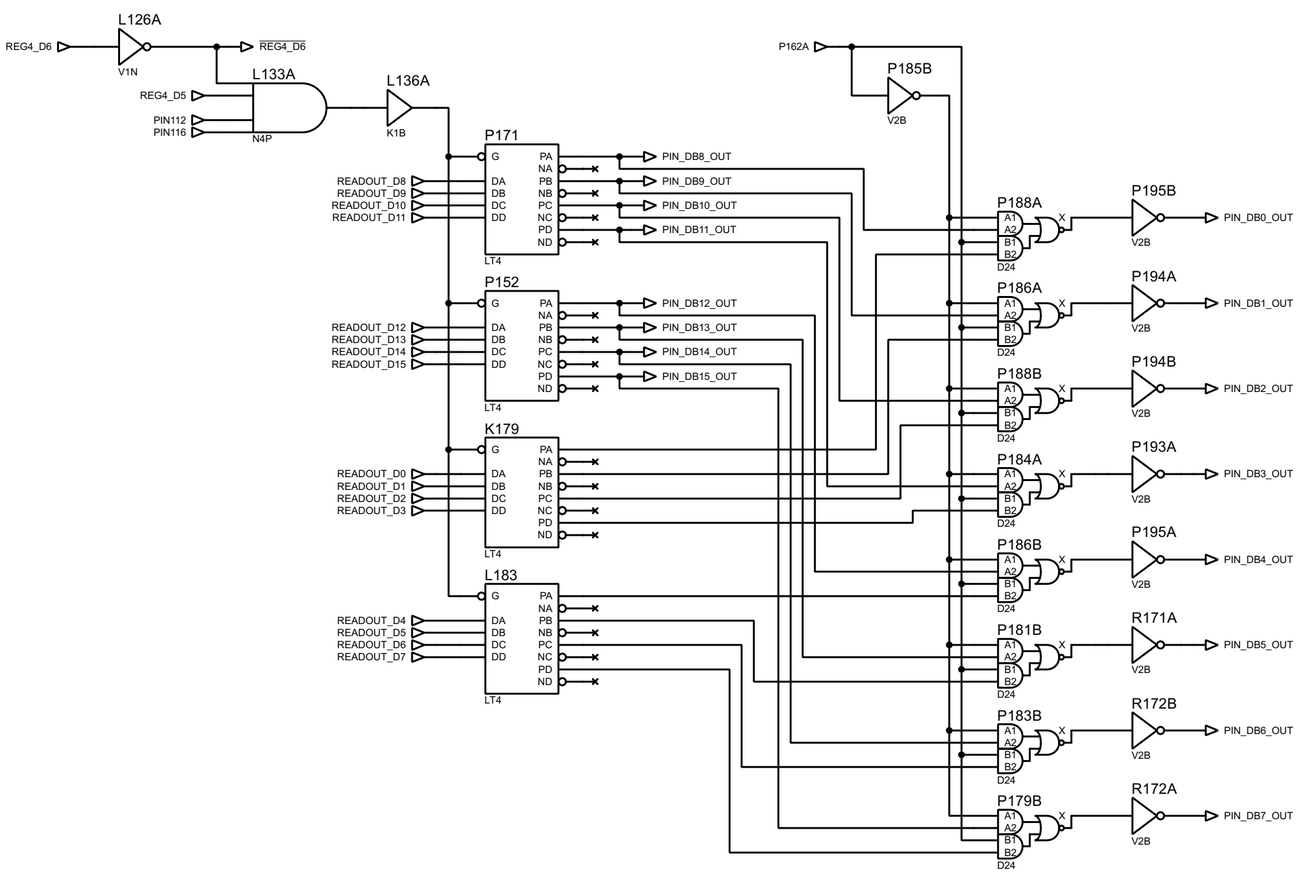

TITLE:	DATE:
Konami 054157 ROM READOUT CONTROL	4/13/2026
BY: Sean Gonsalves REV: A	PAGE: 11/11