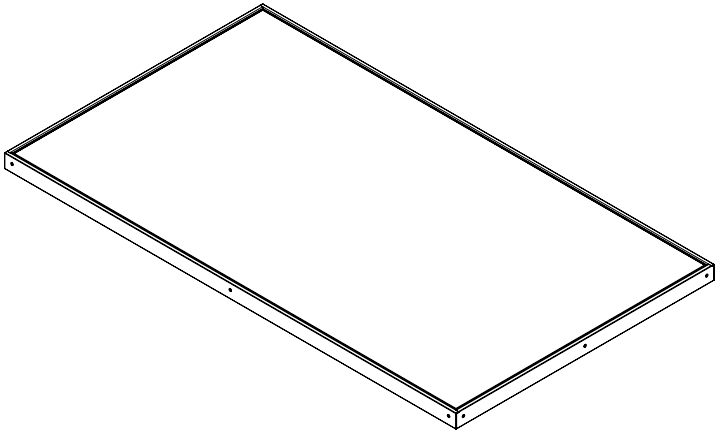

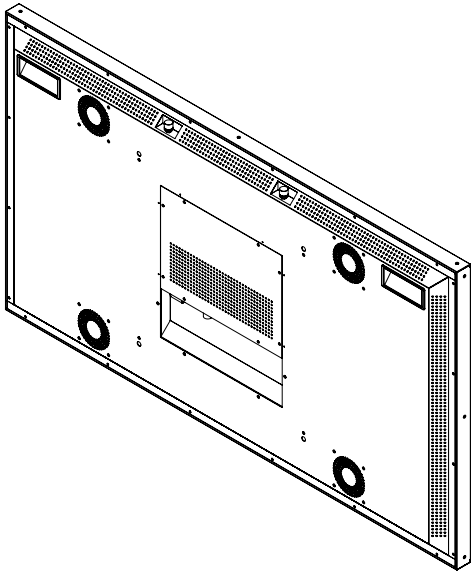

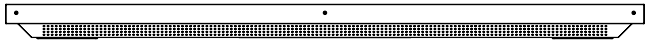

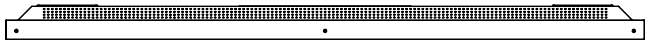

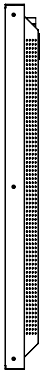

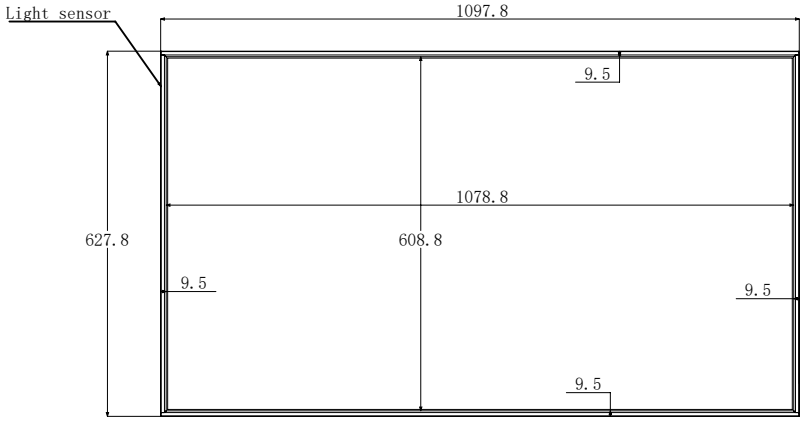
Light sensor
1097.8
9.5
1078.8
627.8
608.8
9.5
9.5
9.5

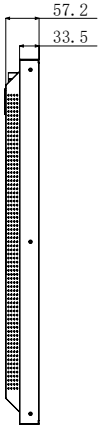
57.2
33.5

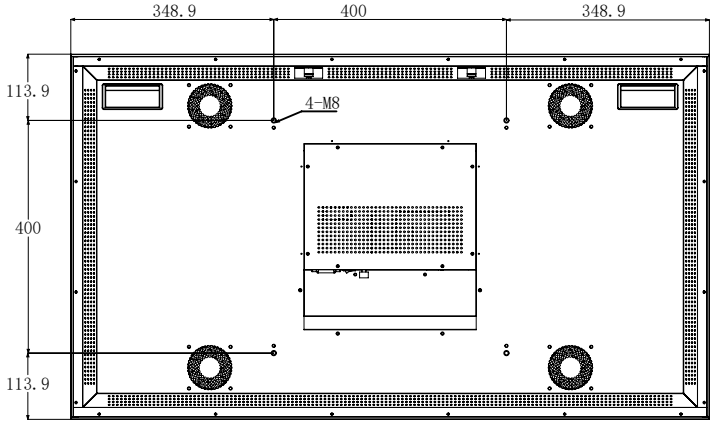
348.9
400
348.9
113.9
4-M8
400
113.9

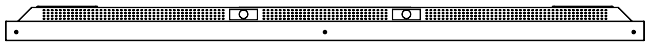

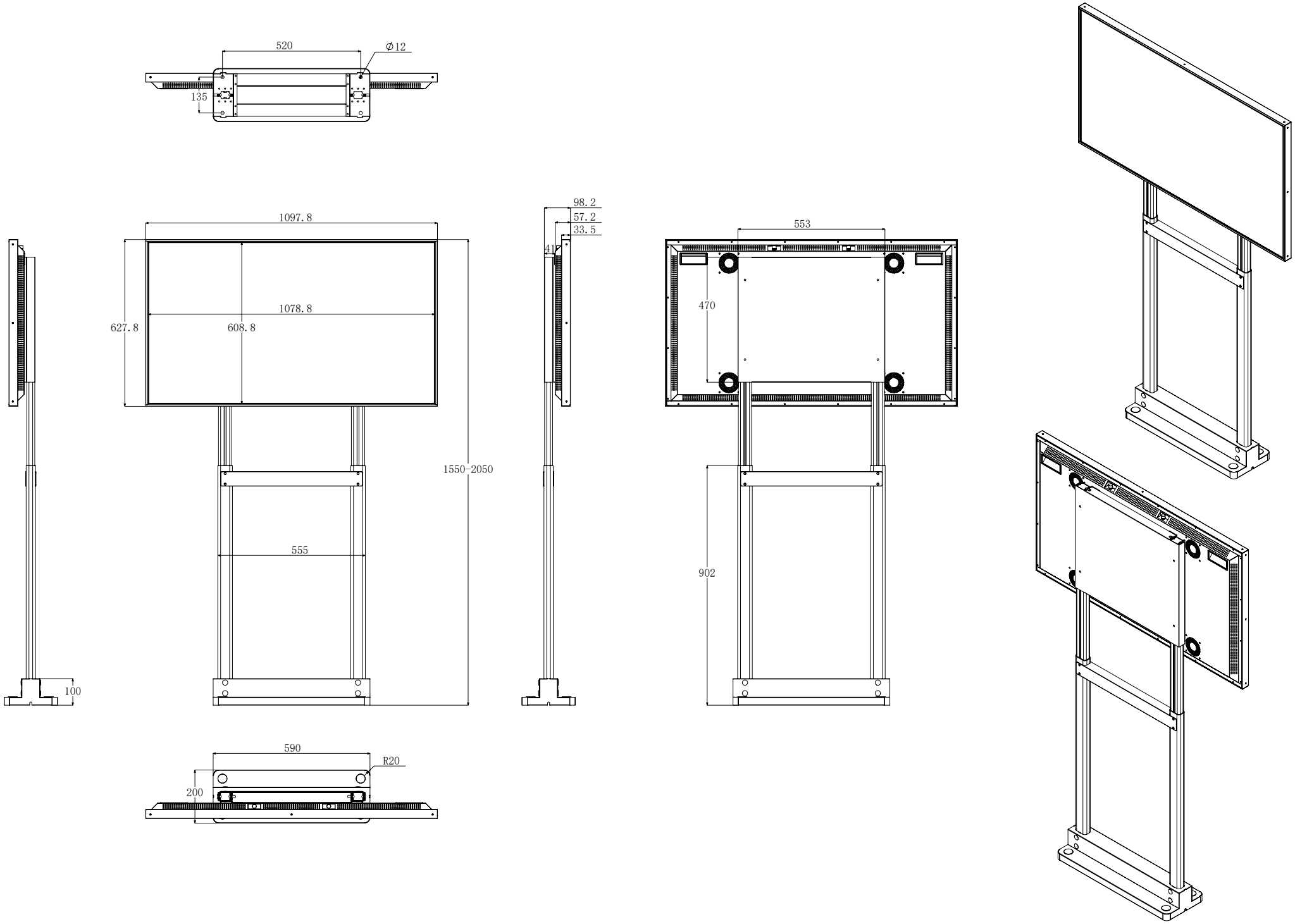
520
Ø12
135
1097.8
1078.8
627.8
608.8
1550-2050
555
100
98.2
57.2
33.5
41
553
470
902
590
R20
200

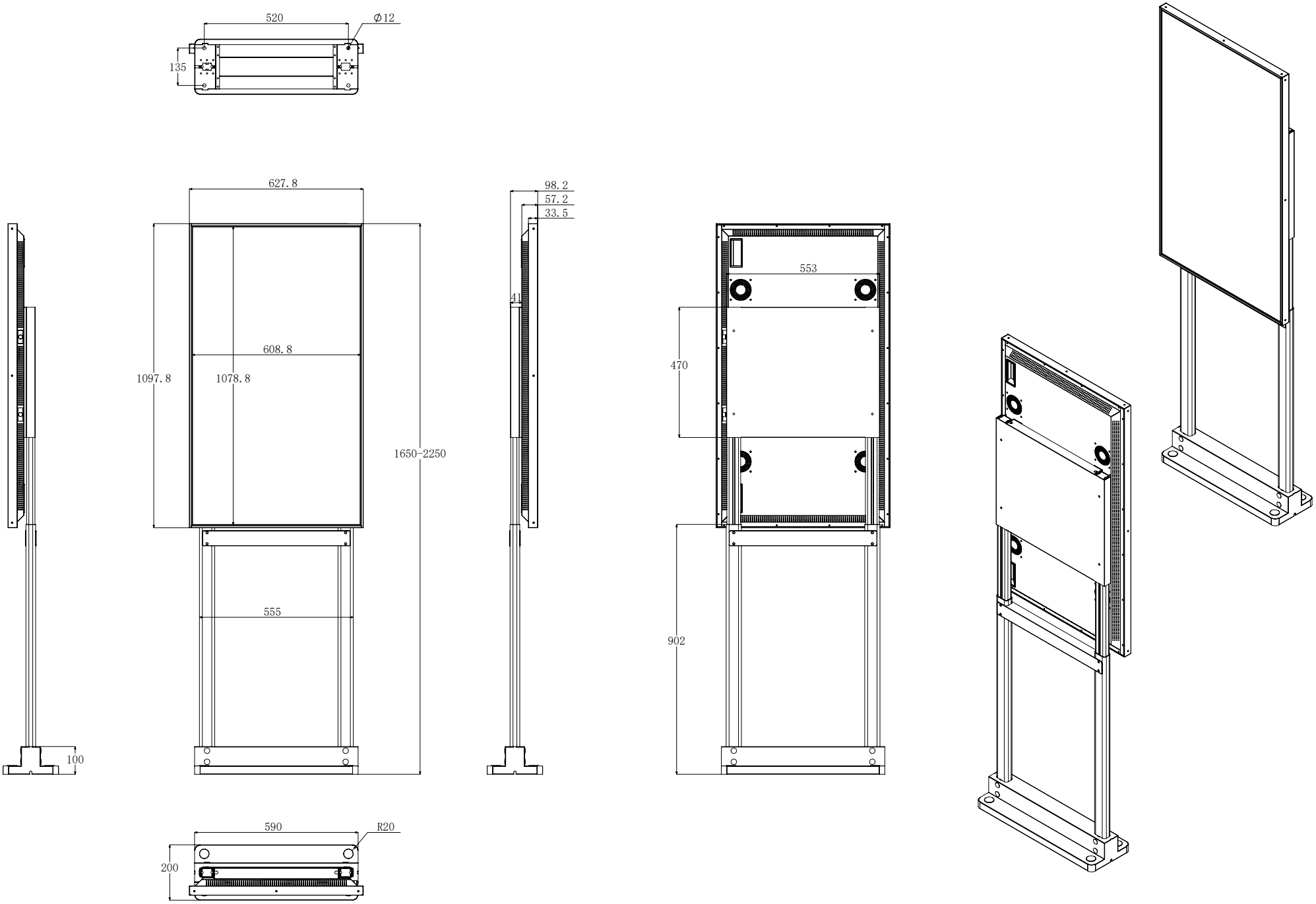
520
Ø12
135
627.8
98.2
57.2
33.5
41
608.8
1097.8
1078.8
1650-2250
555
100
553
470
902
590
R20
200

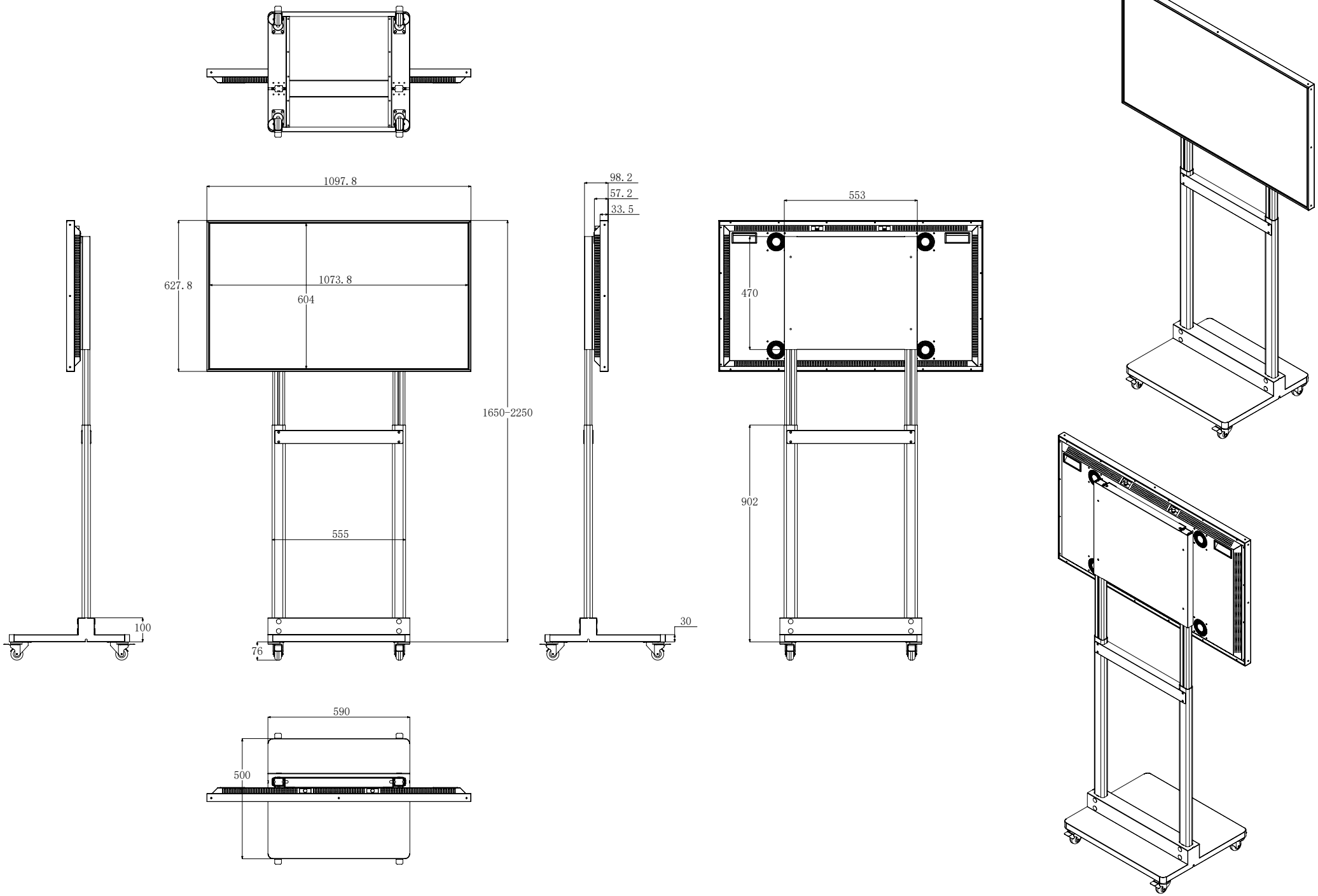
1097.8
627.8
1073.8
604
1650-2250
555
100
76
98.2
57.2
33.5
30
553
470
902
590
500

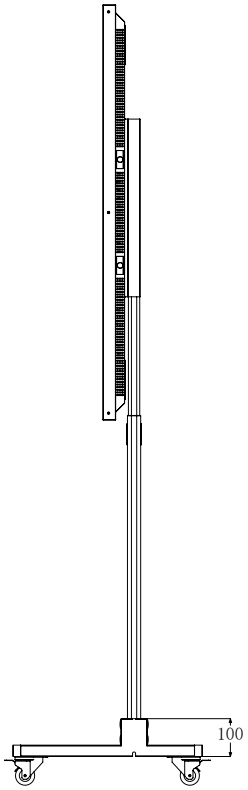
100

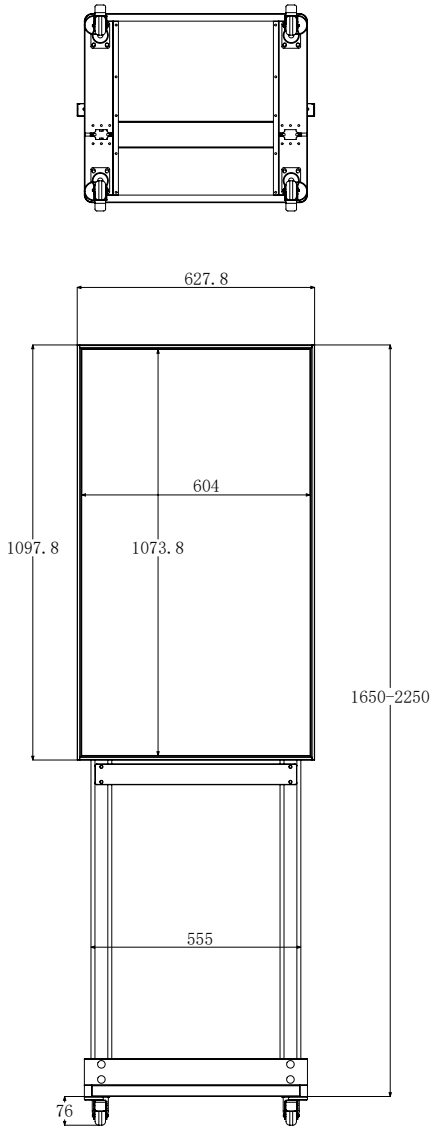
627.8
604
1097.8
1073.8
1650-2250
555
76

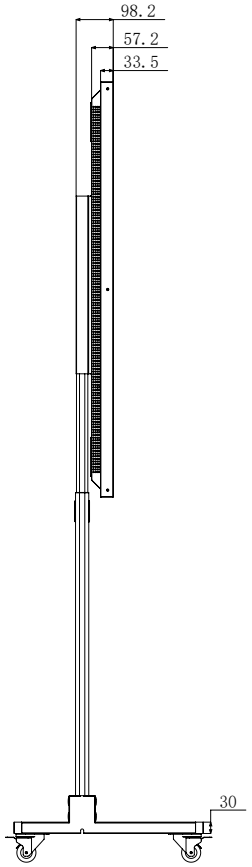
98.2
57.2
33.5
30

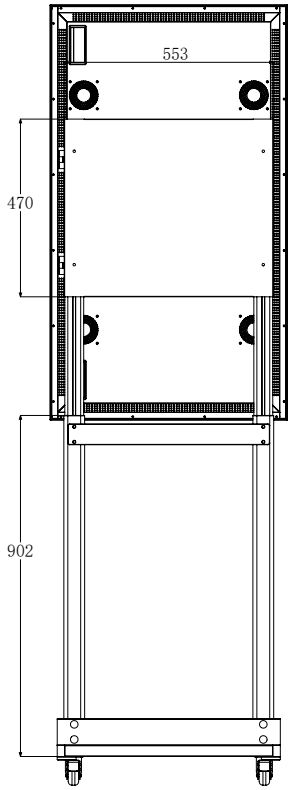
553
470
902

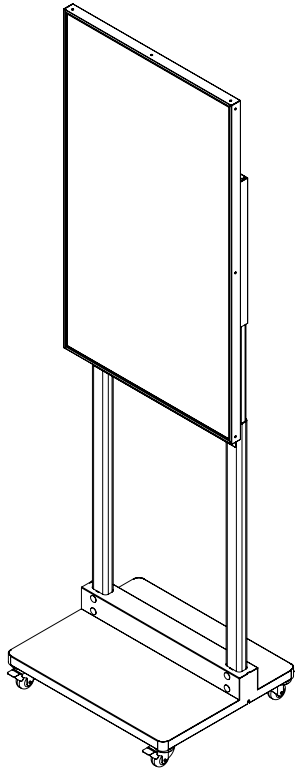

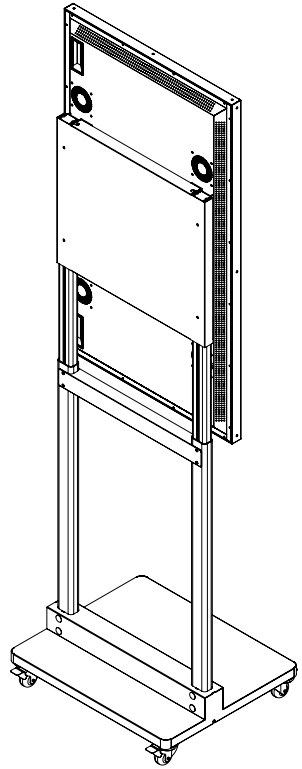

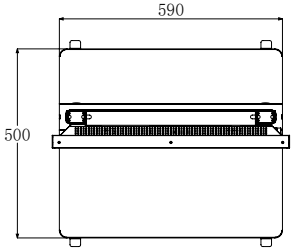
590
500

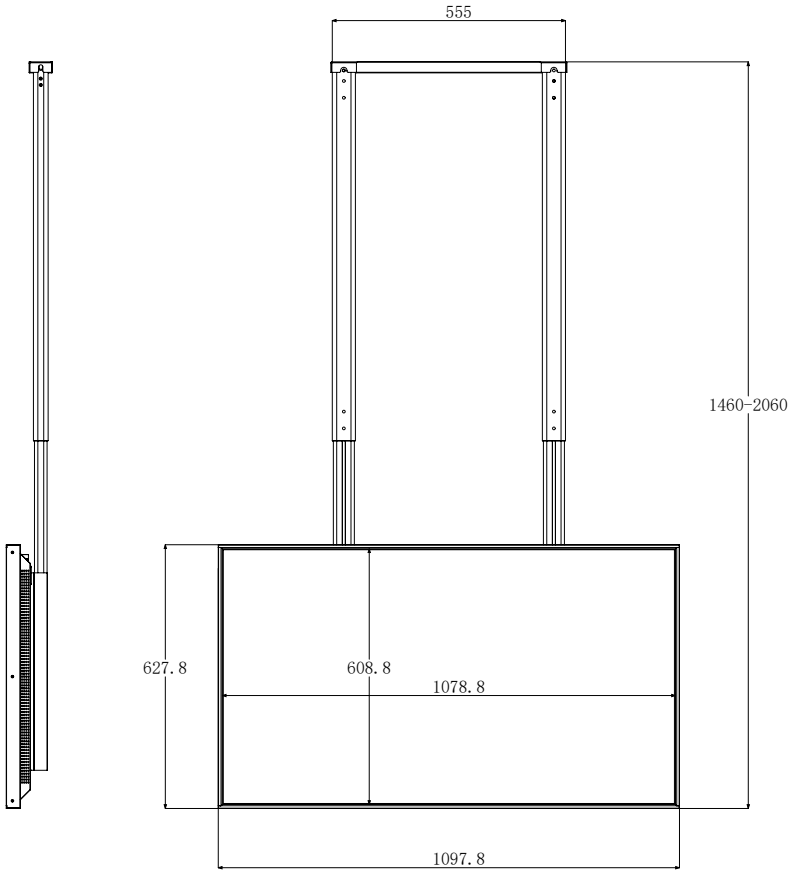
555
1460-2060
627.8
608.8
1078.8
1097.8

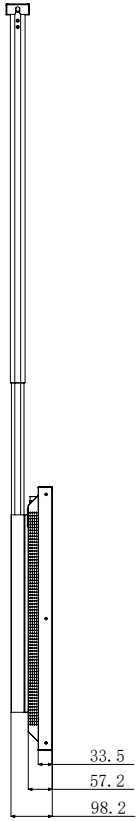
33.5
57.2
98.2

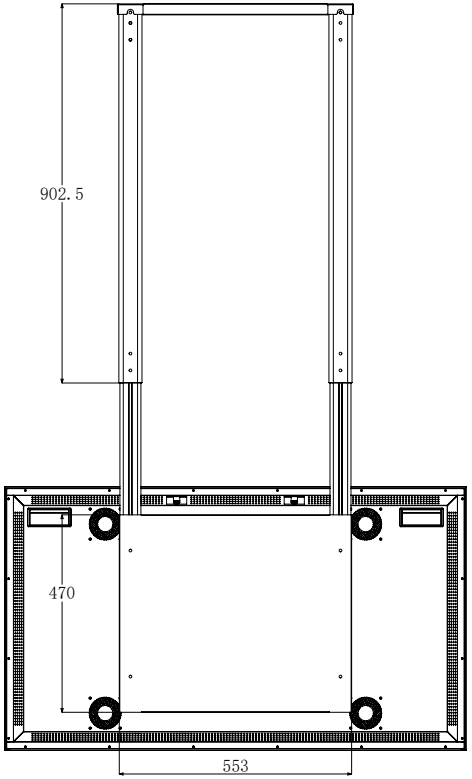
902.5
470
553

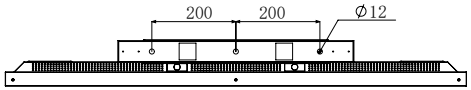
200
200
Φ12

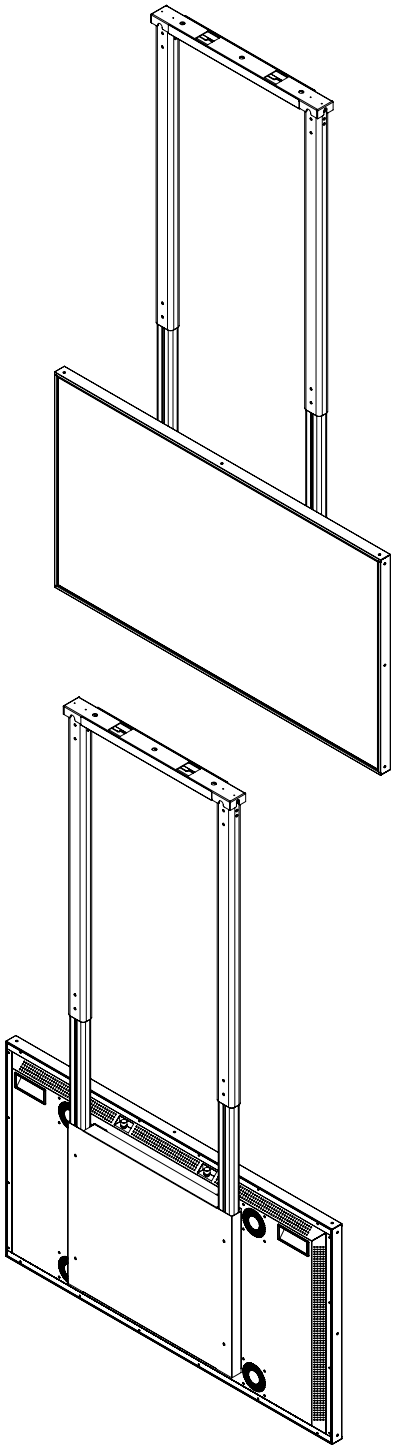

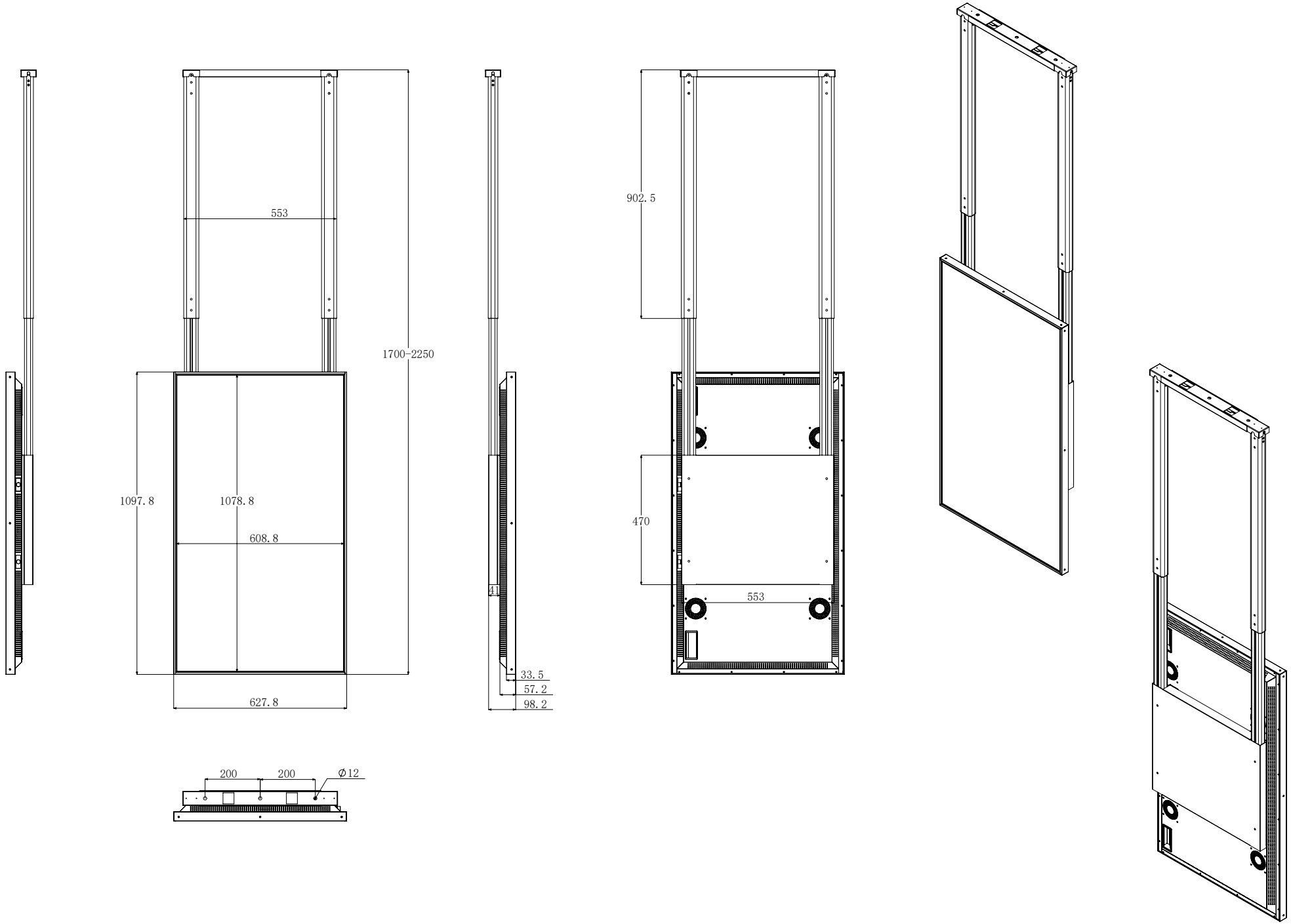
553
1700-2250
1097.8
1078.8
608.8
627.8
41
33.5
57.2
98.2
902.5
470
553
200
200
Φ12