MOBILE PHONE ARCHITECTURE & TECHNOLOGY

HISTORY

- The idea of the first cellular network was brainstormed in 1947
- Disadvantages
  - All the analogue system suffered from overload
  - Incompatibility & proprietary nature
  - Roaming was not possible

- **GSM**/group special mobile started out as the name of working group of **CEPT**(European conference of Postal & telecommunication)
- Task of this group was standardisation of digital mobile communication
- GSM had become the name of standard itself.
- The acronym GSM had been changed from Group Spécial Mobile to Global Systems Mobile Telecommunications.

Technology

- GSM (global system mobile)
- CDMA (Code division multiple access)

Architecture of GSM network

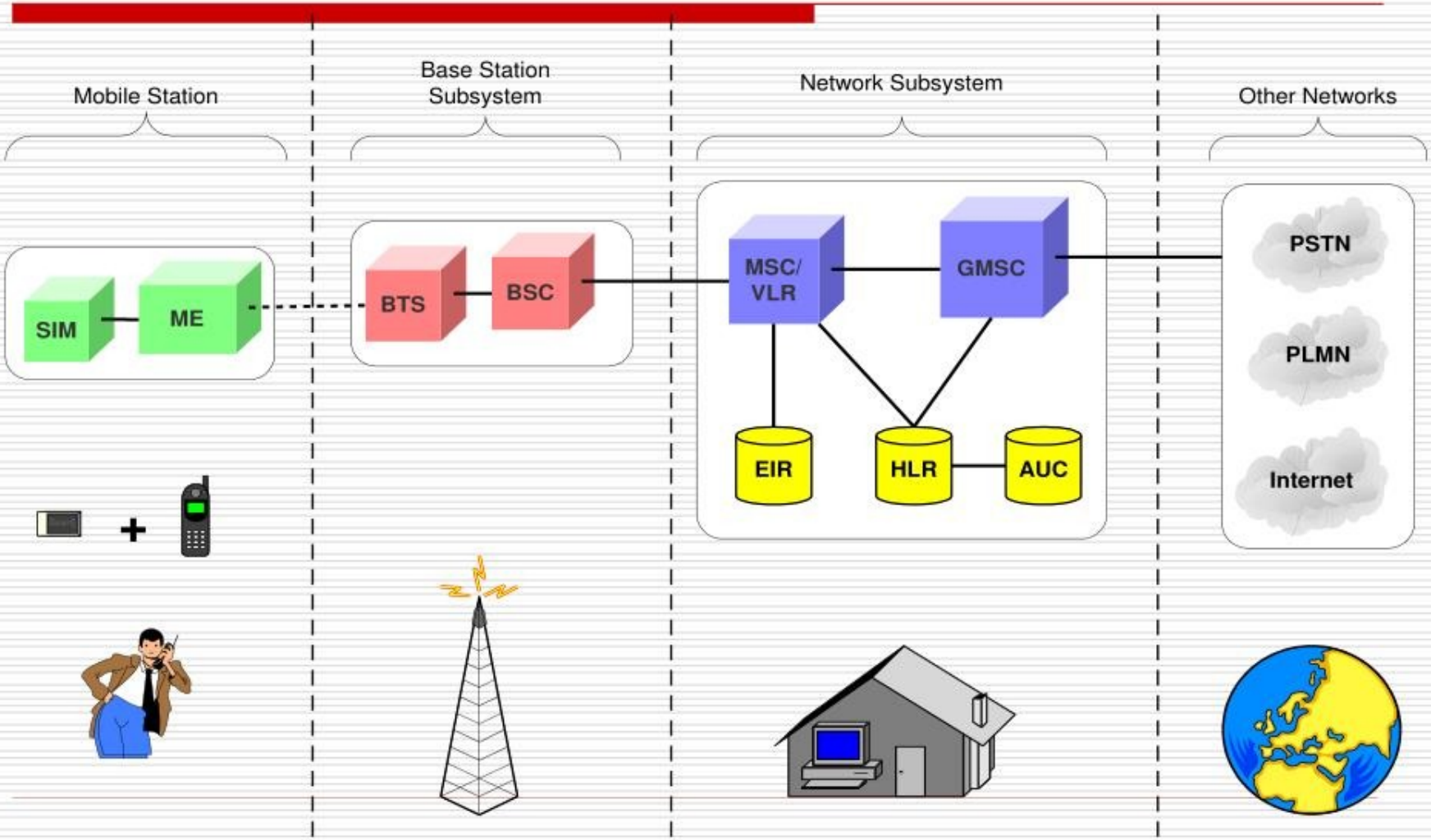

Note: Interfaces have been omitted for clarity purposes.

Cellular Systems

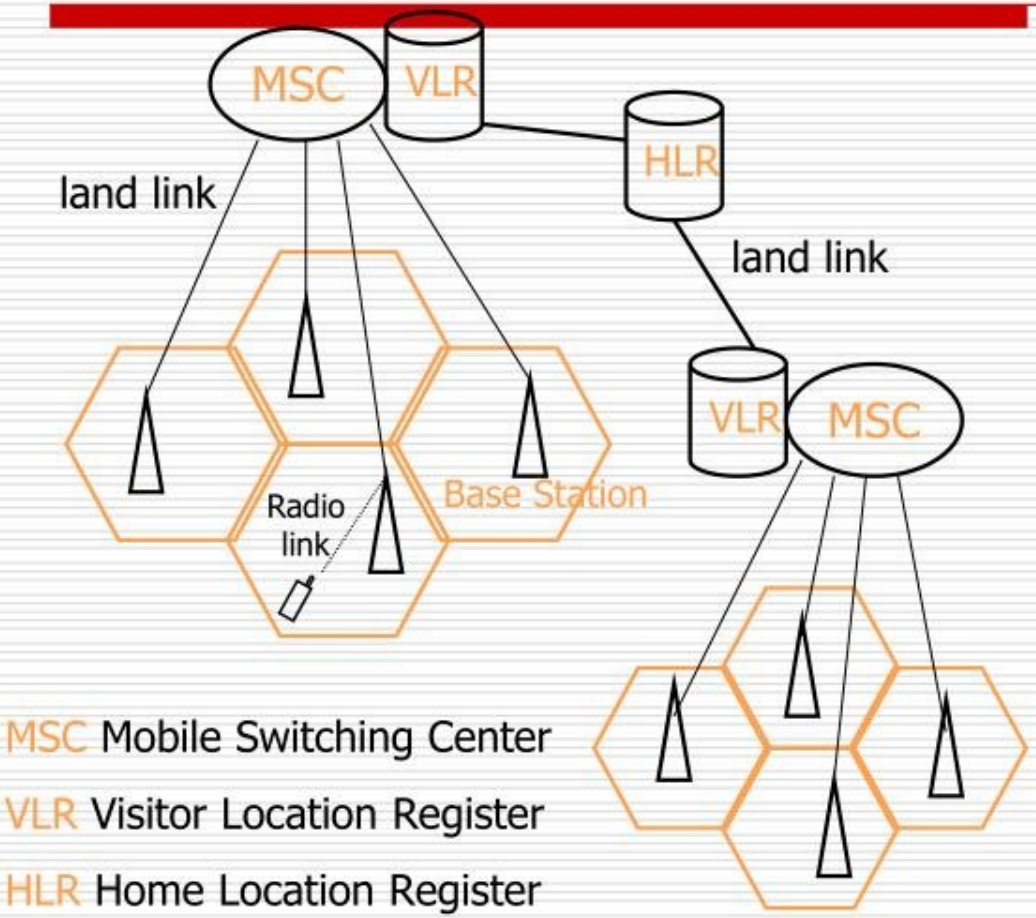

- The geographic area is divided into cells
- Each cell has a Base Station managing the communications
- A set of cells managed by a single MSC is called *Location Area*

Mobile Station (MS)

- Mobile Equipment
  - International Mobile Equipment Identity (IMEI) number
- Subscriber Identity Module (SIM)
  - Personal Identification Number (PIN)
  - International Mobile Subscriber Identity (IMSI) number
  - Enables access to subscribed services
  - Smart card

MOBILE SWITCHING CENTER

- MSC is a sophisticated telephone exchange which provides
  - circuit-switched calling
  - mobility management
  - GSM services to the mobile phones roaming within the area that it serves. ie voice, data and fax services, as well as SMS and call divert.

Tasks of the MSC include

- delivering calls to subscribers as they arrive based on information from the VLR
- connecting outgoing calls to other mobile subscribers or the PSTN.
- delivering SMS from subscribers to the SMSC and vice versa
- arranging handovers from BSC to BSC
- carrying out handovers from this MSC to another
- supporting supplementary services such as conference calls or call hold.
- collecting billing information.

BASE STATION SUB-SYSTEM

- BSS consists of two nodes
  - **Base Transceiver station** (BTS)-: BTS contains the equipment for transmitting and receiving of radio signals (transceivers), antennas, and equipment for encrypting and decrypting communications with the Base Station Controller (BSC)

- **Base Station Controller** (BSC)
  - Provides classically, the intelligence behind the BTS's
  - It handles allocation of radio channels, receives measurements from the mobile phones, controls handovers from BTS to BTS

DATA BASES

- H.L.R (HOME LOCATION REGISTER)
- V.L.R (VISITOR LOCATION REGISTER)
- E.I.R (EQUIPMENT IDENTIFY REGISTER)

HLR

- Master subscriber database
- Used for the management of mobile subscriber
- Contains subscription levels, call restrictions, supplementary services and most recent location of the subscriber

VLR

- Temporary subscriber data base
- Contains data needed by the MSC for servicing visiting subscribers
- Contains information for all visiting mobile subscribers

EIR

- Database which contains information about the mobile equipment identity
- Used for equipment security and validation of different types of mobile equipment

FREQUENCY RANGE

MODE	TX FREQUENCY	RX FREQUENCY
GSM 900	890-915 MHz	935-960 MHz
DCS 1800	1710-1785 MHz	1805-1880 MHZ
PCS 1900	1850-1910 MHz	1930-1990 MHz

ACCESS SCHEMES

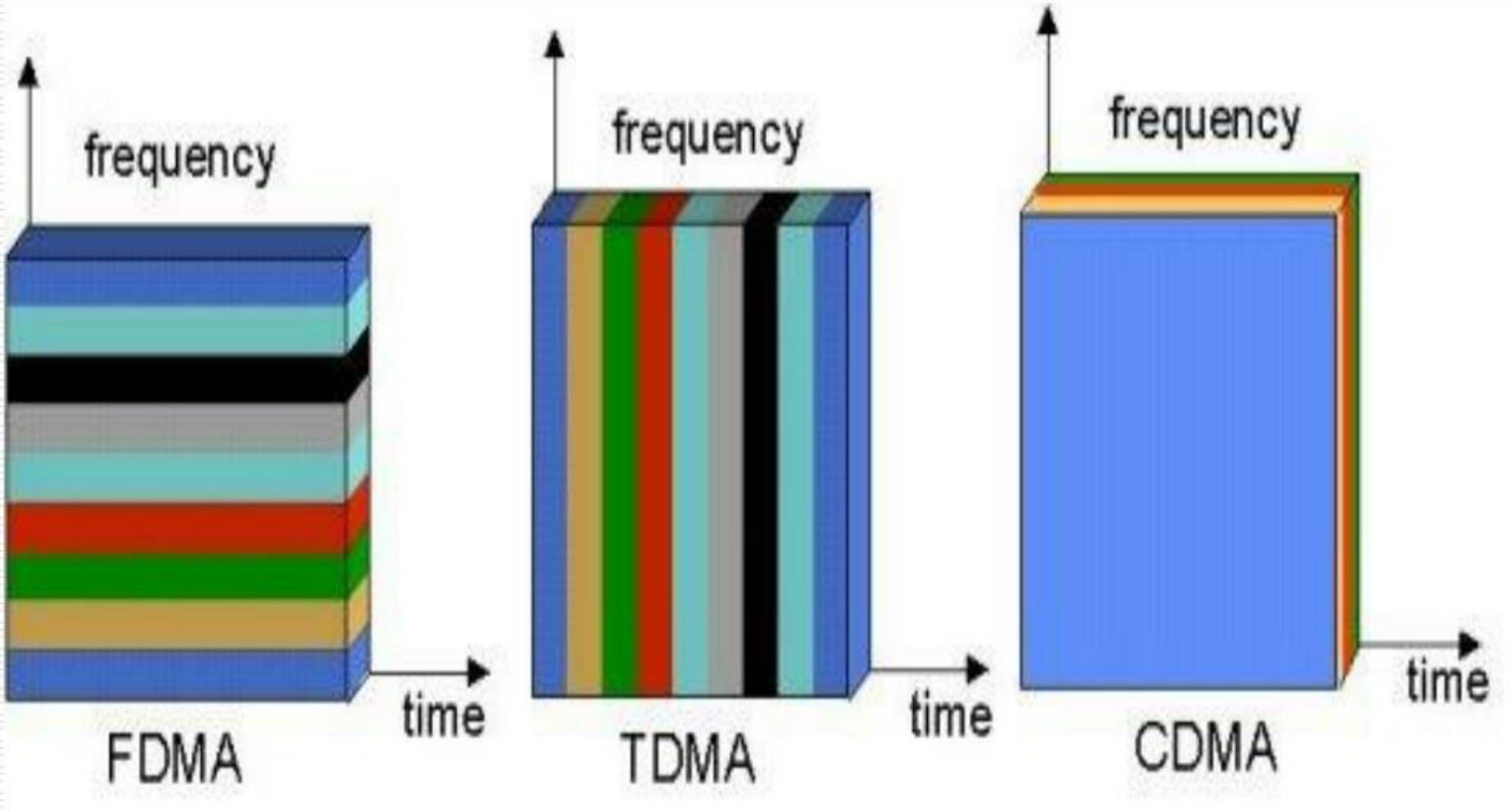

CDMA BASICS

- CDMA (Code Division Multiple Access) splits calls into fragments and send them over different frequencies simultaneously
- The use of multiple frequencies gives CDMA effective protection against interference and lost calls
- CDMA supports true packet switching and does not use time slots, therefore is more bandwidth efficient than TDMA -- also a more direct path to 3G
- Current CDMA penetration in the world market is about 27%

ADVANTAGES OF CDMA

- Voice quality
- Call security
- Network capacity
- Call maintenance

BLOCK DIAGRAM

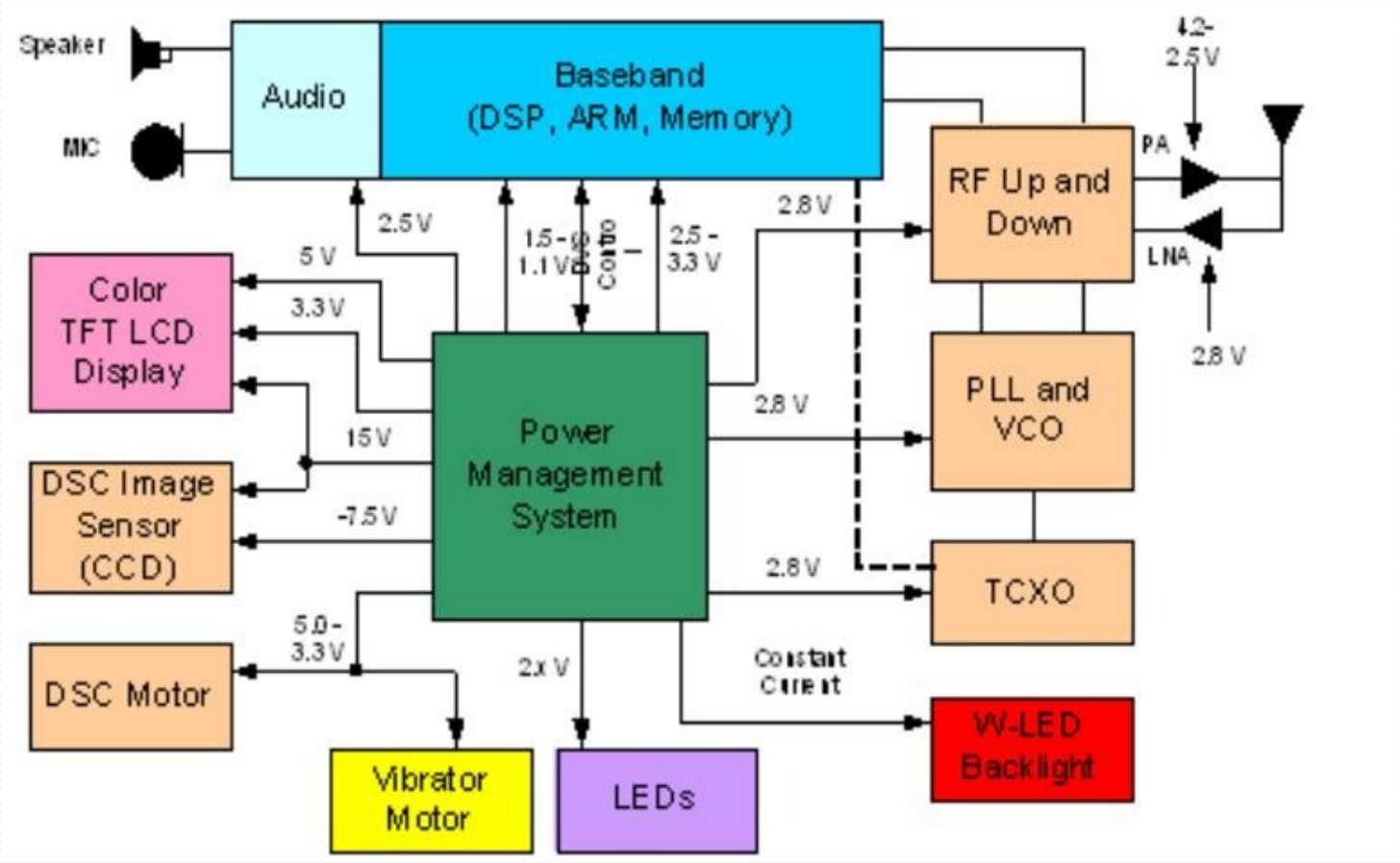

MAJOR SECTIONS

- There are three major sections inside a mobile phone
  - Power Section
  - Radio Section
  - Computer Section

POWER SECTION

- A Power section deals with power related tasks such as power distribution or charging the battery so this section is divided into two sub sections
  - Power distribution
  - Charging section

RADIO SECTION

- A radio section has basically a set of four main functions-:
  - Band Switching
  - RF Power Amplification
  - Transmitter
  - Receiver

COMPUTER SECTION

- A computer section consists of two main functions
  - CPU (central processing unit)
  - Memory (RAM,FLASH,COMBO CHIP)

TRANSMISSION

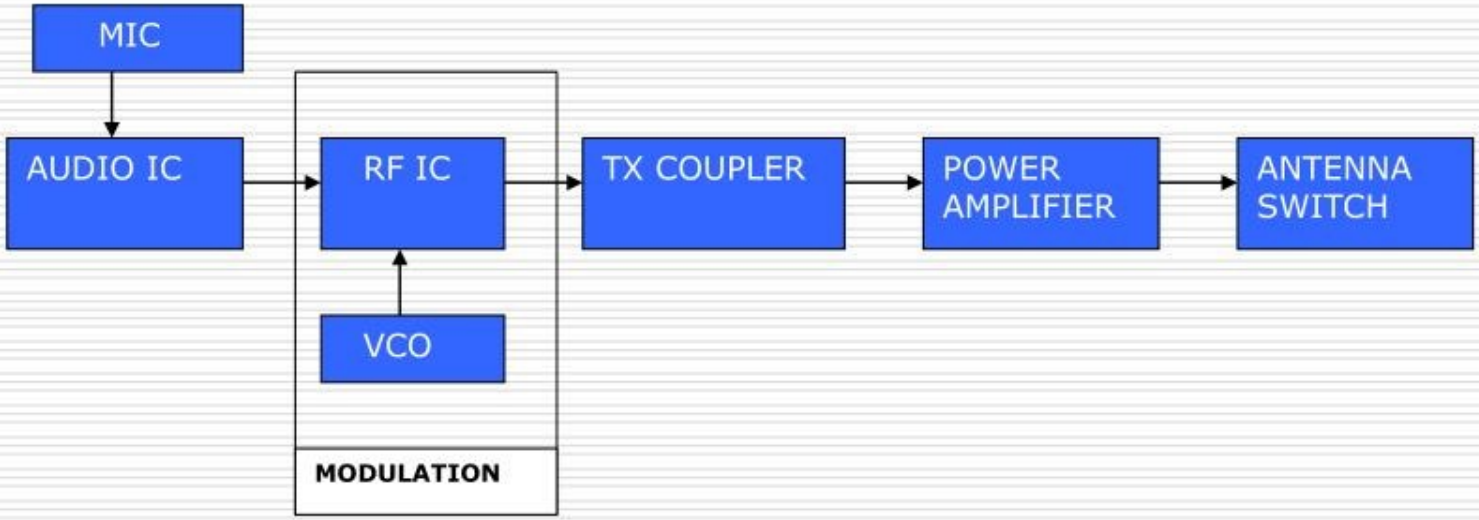

NOKIA 1100(RH-18)/2300(RH-4)

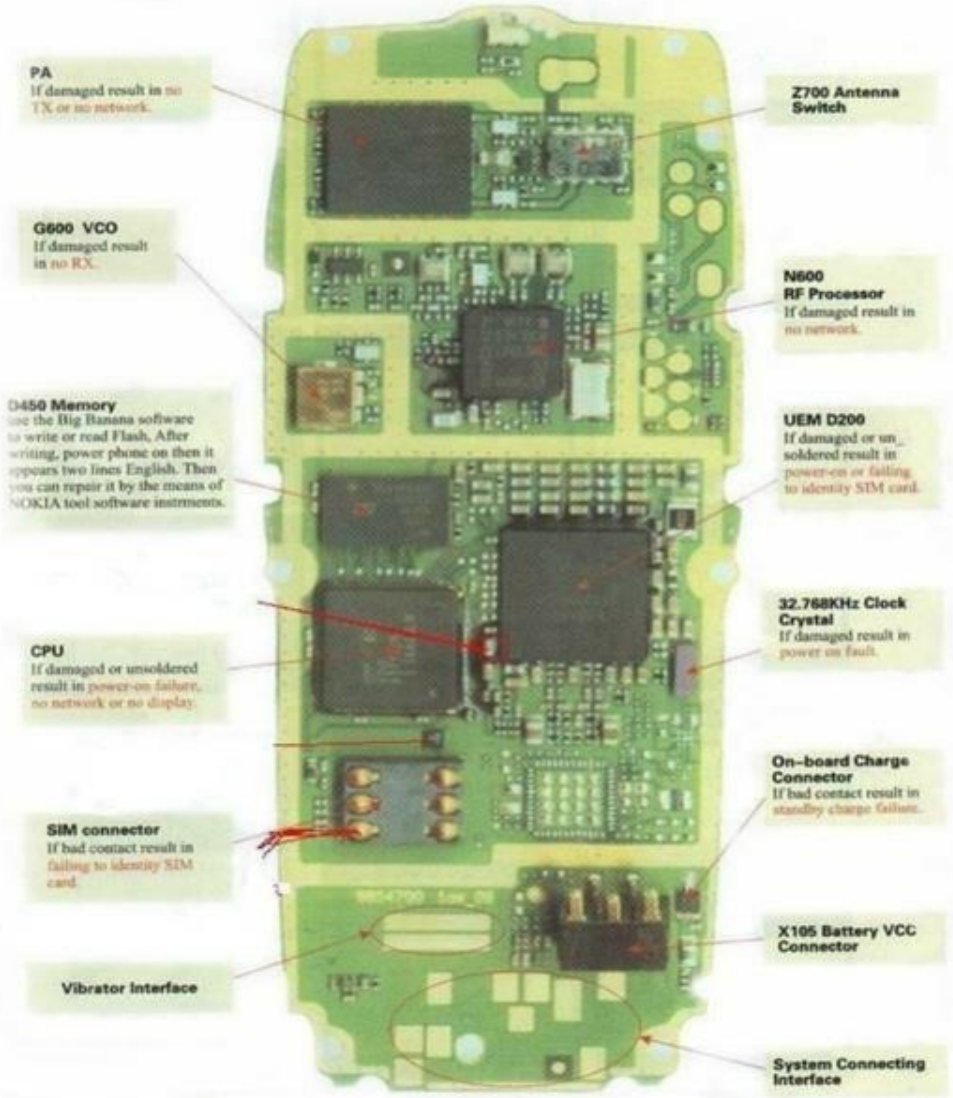
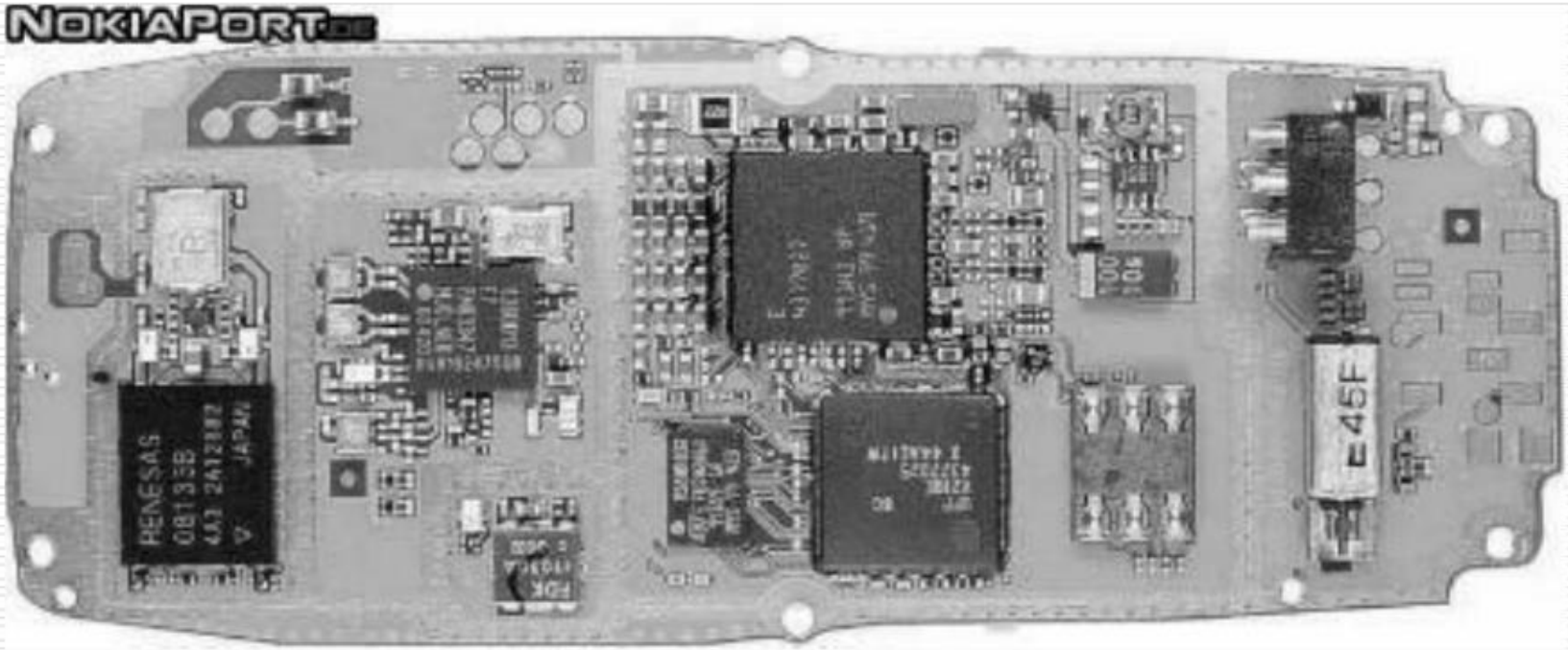
NOKIA 2600