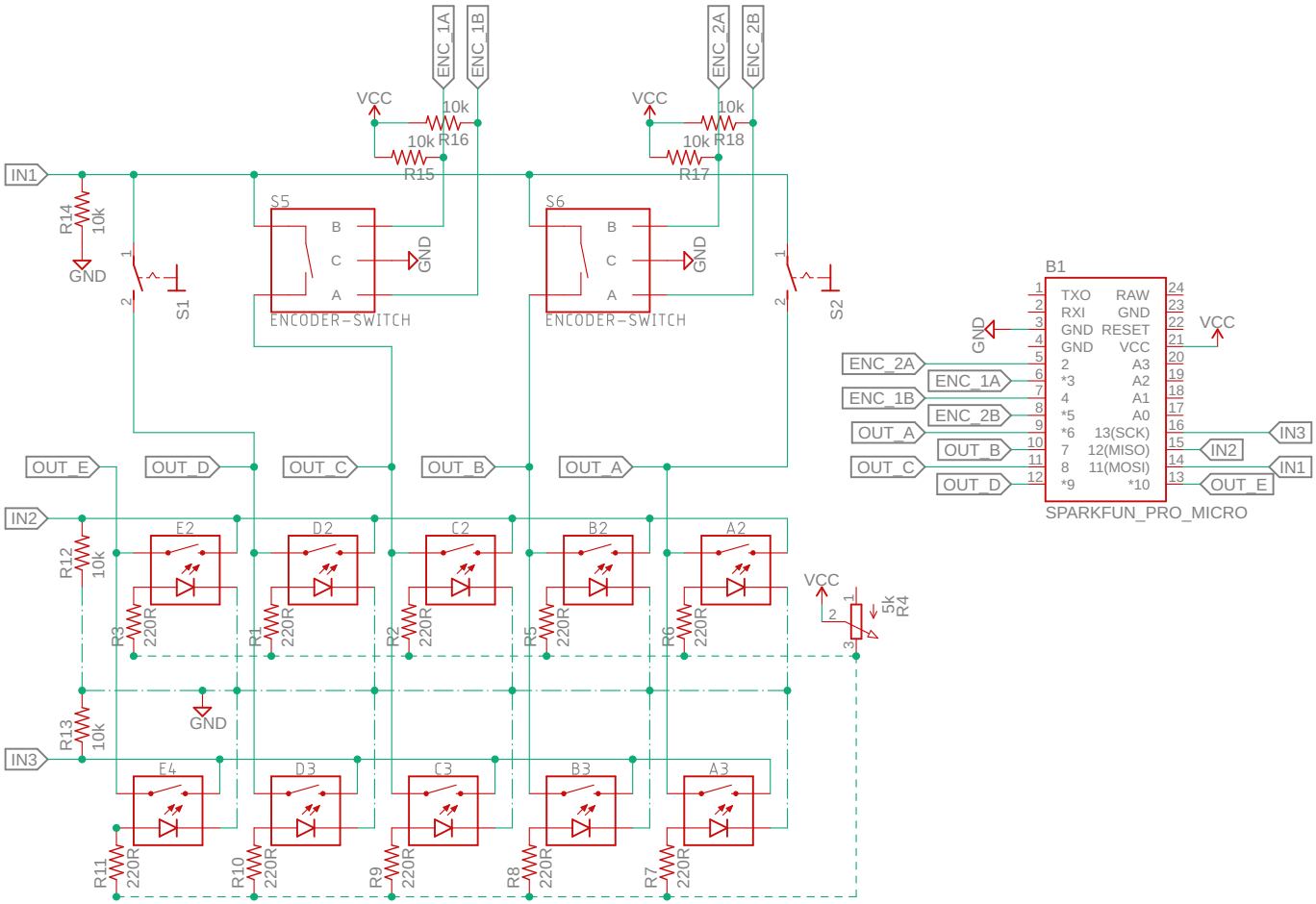

AUTHOR: Bryce Dombrowski

TITLE: mini-hotkeyboard-schematic

Document Number:

REV:

Date: 2020-04-14 10:37 PM

Sheet: 1/1