COM3505 – Week 05: Programming the ESP32

1. Course Notes

In this exercise you will build a simple IoT monitoring system using the ESP32. The device reads temperature data from an analog temperature sensor (TMP36 or LM35) and displays the readings on a web dashboard hosted on the ESP32.

Objectives:

This exercise demonstrates several important IoT concepts:

- reading analog sensor data
- converting voltage readings into temperature values
- hosting a web dashboard on an embedded device

2. TMP36 temp sensor tutorial

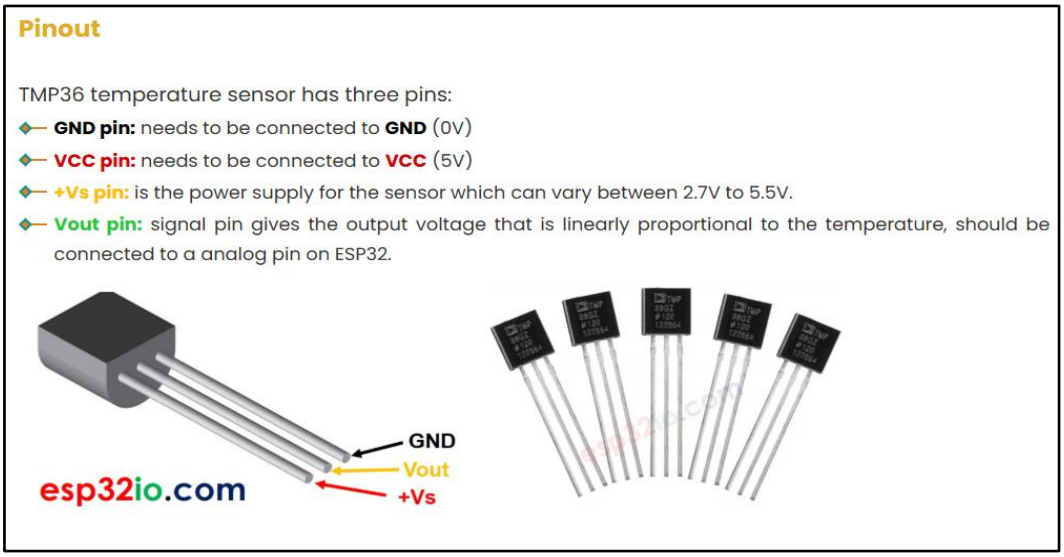

2.1. Wiring Diagram from [1]

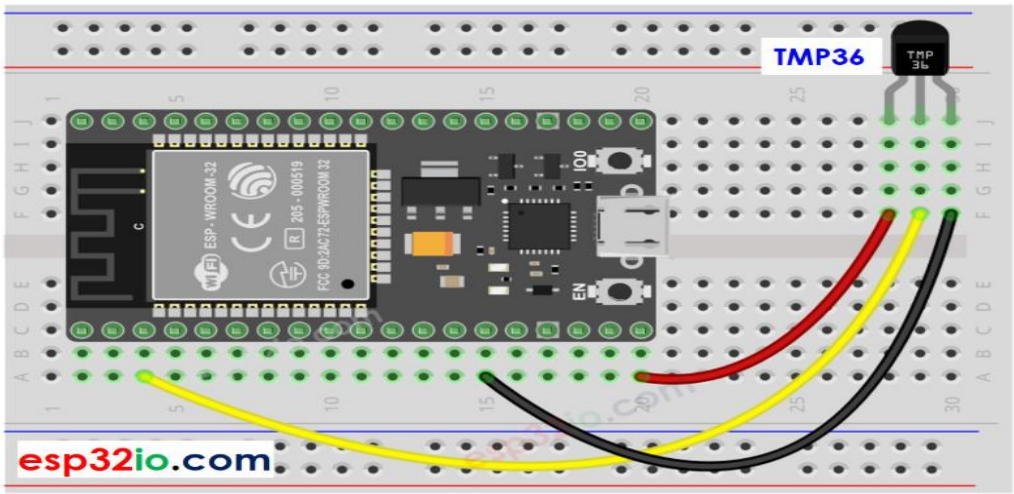

My example:

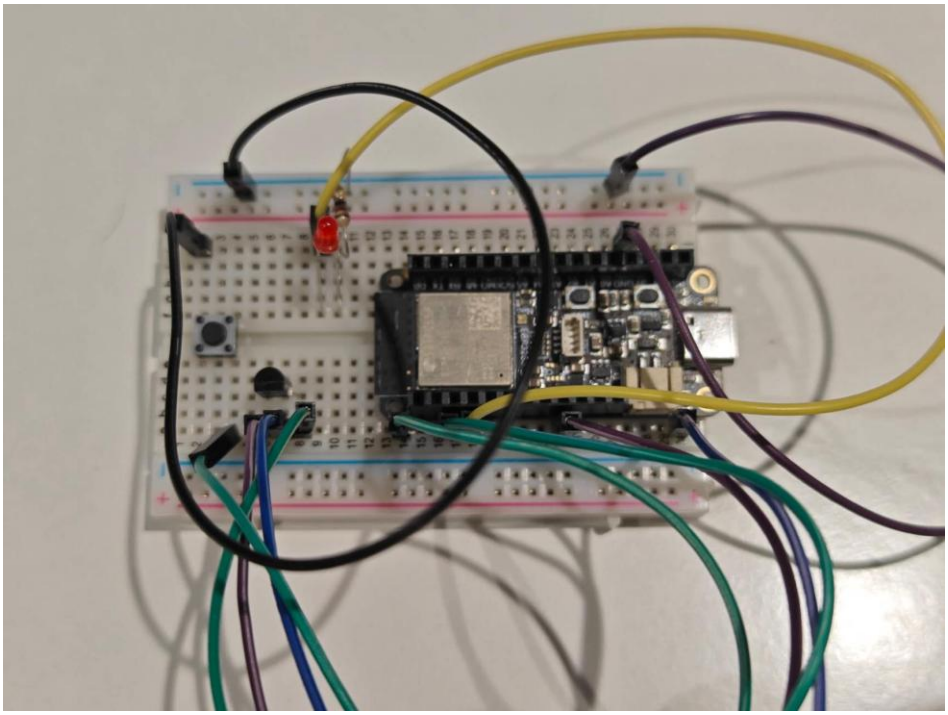

2.2. Software Setup

1. Install **Arduino IDE** or **PlatformIO**.
2. Install **ESP32 board definitions**.
3. Open **Ex11.cpp**.
4. Update the following:

```
const char* ssid     = "YOUR_WIFI_NAME";
const char* password = "YOUR_WIFI_PASSWORD";
```

5. Connect ESP32 to your PC.
6. Upload the code.
7. Open Serial Monitor at **115200 baud**.

2.3. Code Walkthrough

- **ADC Setup**

```
analogReadResolution(12);          // 12-bit ADC
analogSetPinAttenuation(TEMP_PIN, ADC_11db);
analogSetPinAttenuation(LIGHT_PIN, ADC_11db);
```

ADC reads 0–3.3 V as 0–4095 (12-bit resolution). Attenuation allows for higher input voltage range.

- **Temperature Sensor Reading**

```
int adcTemp = analogRead(TEMP_PIN);
float voltage = adcTemp * VREF / ADC_MAX;
float temperatureC = (voltage - 0.5) * 100.0;  // TMP36 formula
```

Converts ADC value to voltage, then to °C.

- **Web Dashboard**

```
server.on("/", handleRoot);
server.begin();
```

ESP32 serves a simple HTML page showing: Temperature. Auto-refresh every 2 seconds using JavaScript.

Running the Exercise

- Power the circuit and upload the code.
- Check Serial Monitor:

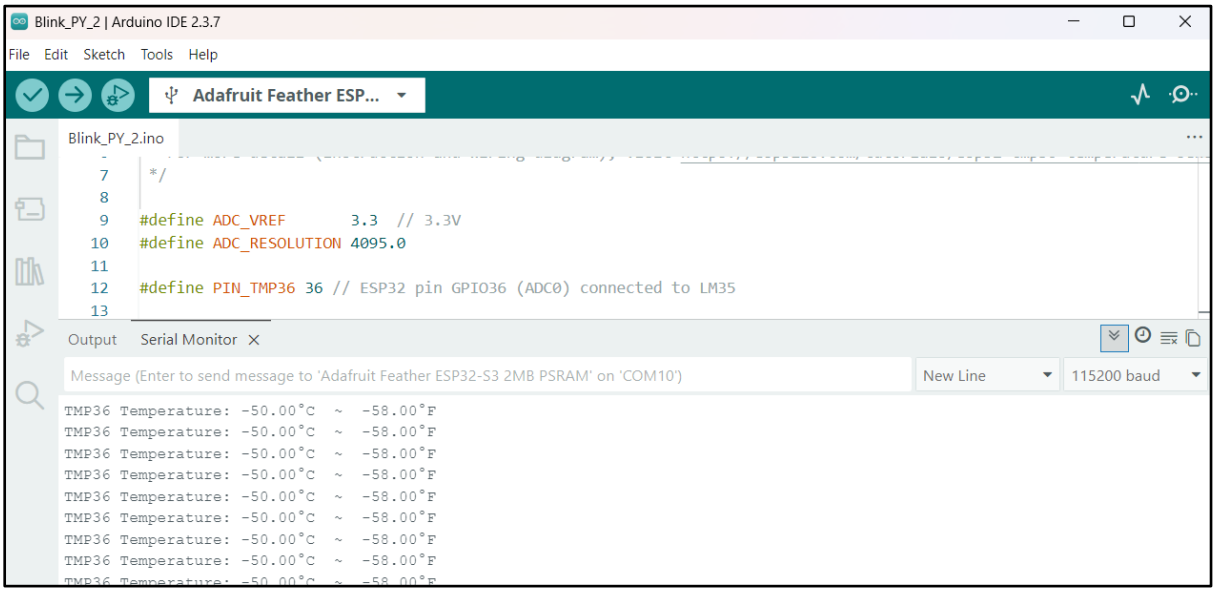

Connect to the ESP32 IP in a browser: Observe live readings.

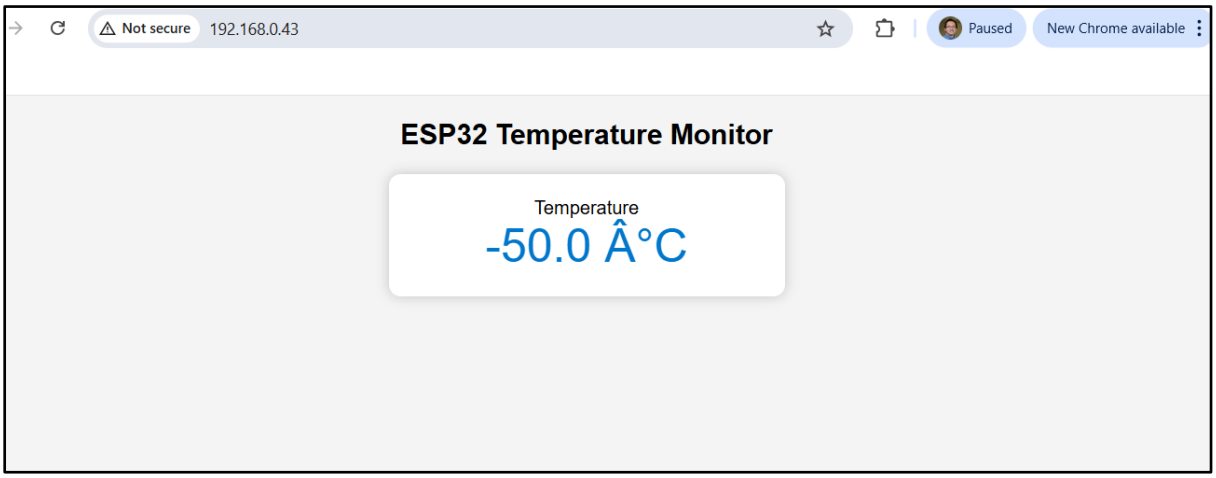

3. NTC Thermistor Temperature sensor tutorial

Schematic

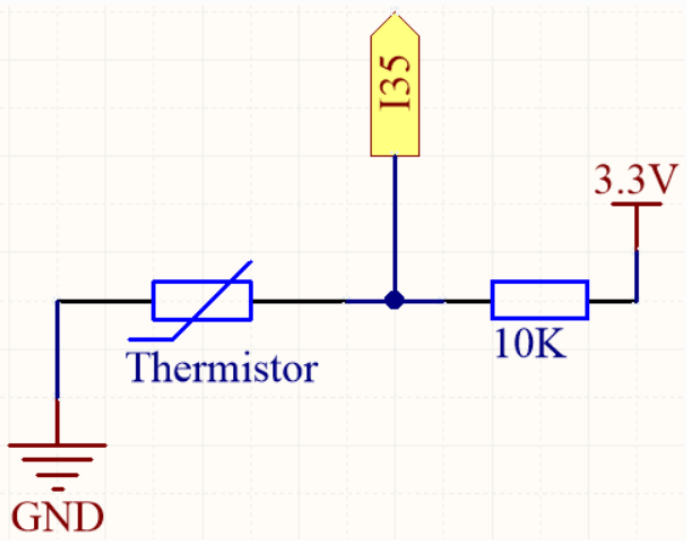

When the temperature rises, the resistance of the thermistor decreases, causing the value read on I35 to decrease. Additionally, by using a formula, you can convert the analog value into temperature and then print it out.

3.1. Wiring Diagram from [2]

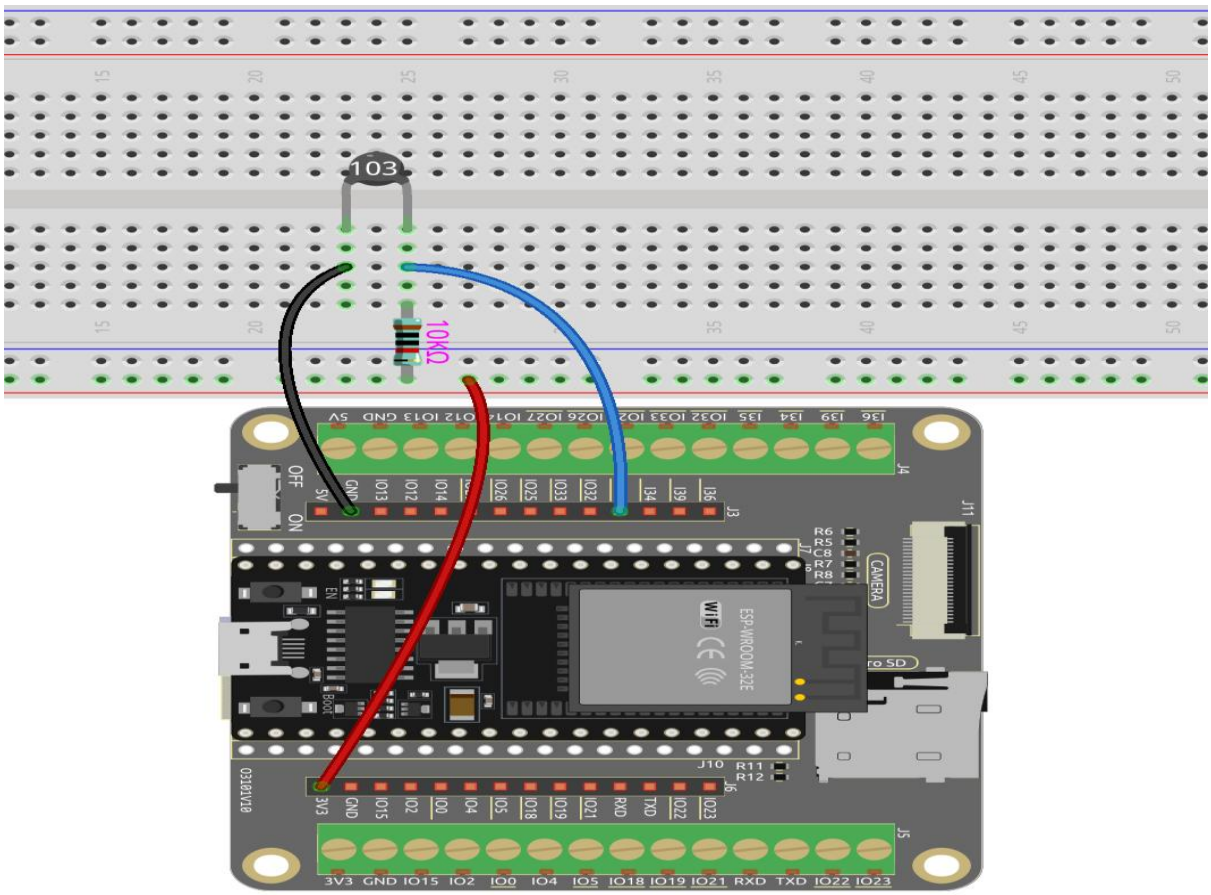

My example:

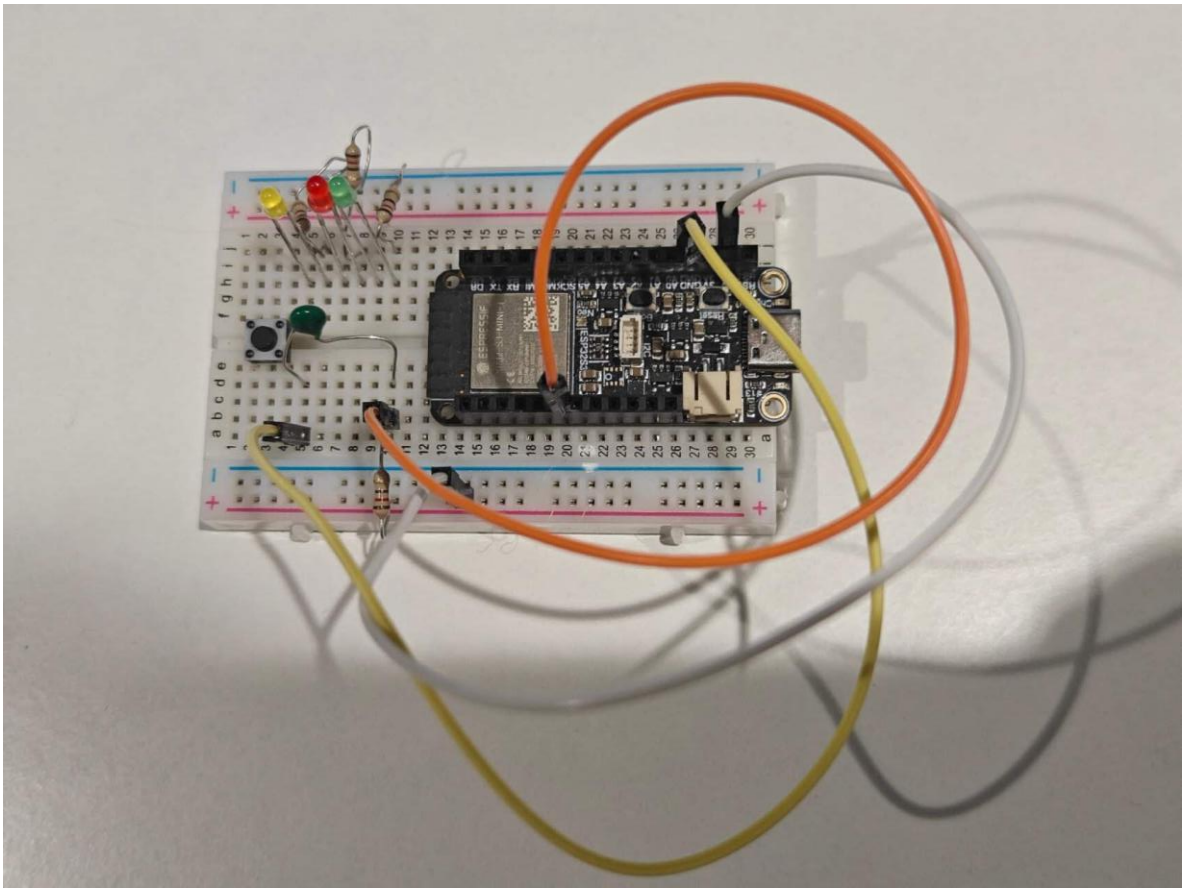

3.2. Software Setup

1. Install **Arduino IDE** or **PlatformIO**.
2. Install **ESP32 board definitions**.
3. Open **Ex12.cpp**.
4. Update the following:

```
const char* ssid     = "YOUR_WIFI_NAME";
const char* password = "YOUR_WIFI_PASSWORD";
```

5. Connect ESP32 to your PC.
6. Upload the code.
7. Open Serial Monitor at **115200 baud**.

Running the Exercise

- Power the circuit and upload the code.
- Check Serial Monitor:

Exer_11_Sensor_Reading_Digital | Arduino IDE 2.3.7

File Edit Sketch Tools Help

Adafruit Feather ESP...

Exer_11_Sensor_Reading_Digital.ino

```
// Define constants
const int thermistorPin = 10; // Pin connected to the thermistor
const float referenceVoltage = 3.3;
const float referenceResistor = 10000; // the 'other' resistor
const float beta = 3950; // Beta value (Typical Value)
const float nominalTemperature = 25; // Nominal temperature for calculating the temperature coefficient
const float nominalResistance = 10000; // Resistance value at nominal temperature

void setup() {
```

Output Serial Monitor

Message (Enter to send message to 'Adafruit Feather ESP32-S3 2MB PSRAM' on 'COM4')

```
ADC: 4095  TempC: -273.15 C  TempF: -459.67 F
ADC: 4095  TempC: -273.15 C  TempF: -459.67 F
ADC: 4095  TempC: -273.15 C  TempF: -459.67 F
ADC: 4095  TempC: -273.15 C  TempF: -459.67 F
ADC: 4095  TempC: -273.15 C  TempF: -459.67 F
ADC: 4095  TempC: -273.15 C  TempF: -459.67 F
ADC: 4095  TempC: -273.15 C  TempF: -459.67 F
ADC: 4095  TempC: -273.15 C  TempF: -459.67 F
ADC: 4095  TempC: -273.15 C  TempF: -459.67 F
ADC: 4095  TempC: -273.15 C  TempF: -459.67 F
ADC: 4095  TempC: -273.15 C  TempF: -459.67 F
ADC: 4095  TempC: -273.15 C  TempF: -459.67 F
ADC: 4095  TempC: -273.15 C  TempF: -459.67 F
ADC: 4095  TempC: -273.15 C  TempF: -459.67 F
ADC: 4095  TempC: -273.15 C  TempF: -459.67 F
ADC: 4095  TempC: -273.15 C  TempF: -459.67 F
ADC: 4095  TempC: -273.15 C  TempF: -459.67 F
```

Not secure 192.168.0.73

COM3505 IoT Exercise 12 ESP32 Sensors

Temperature: -273.1 °C

Light Level: 0

References

1. https://esp32io.com/tutorials/esp32-tmp36-temperature-sensor
2. https://docs.sunfounder.com/projects/esp32-starter-kit/en/latest/arduino/basic_projects/ar_thermistor.html
3. ESP32 ADC Reference
4. ESP32 PWM Reference