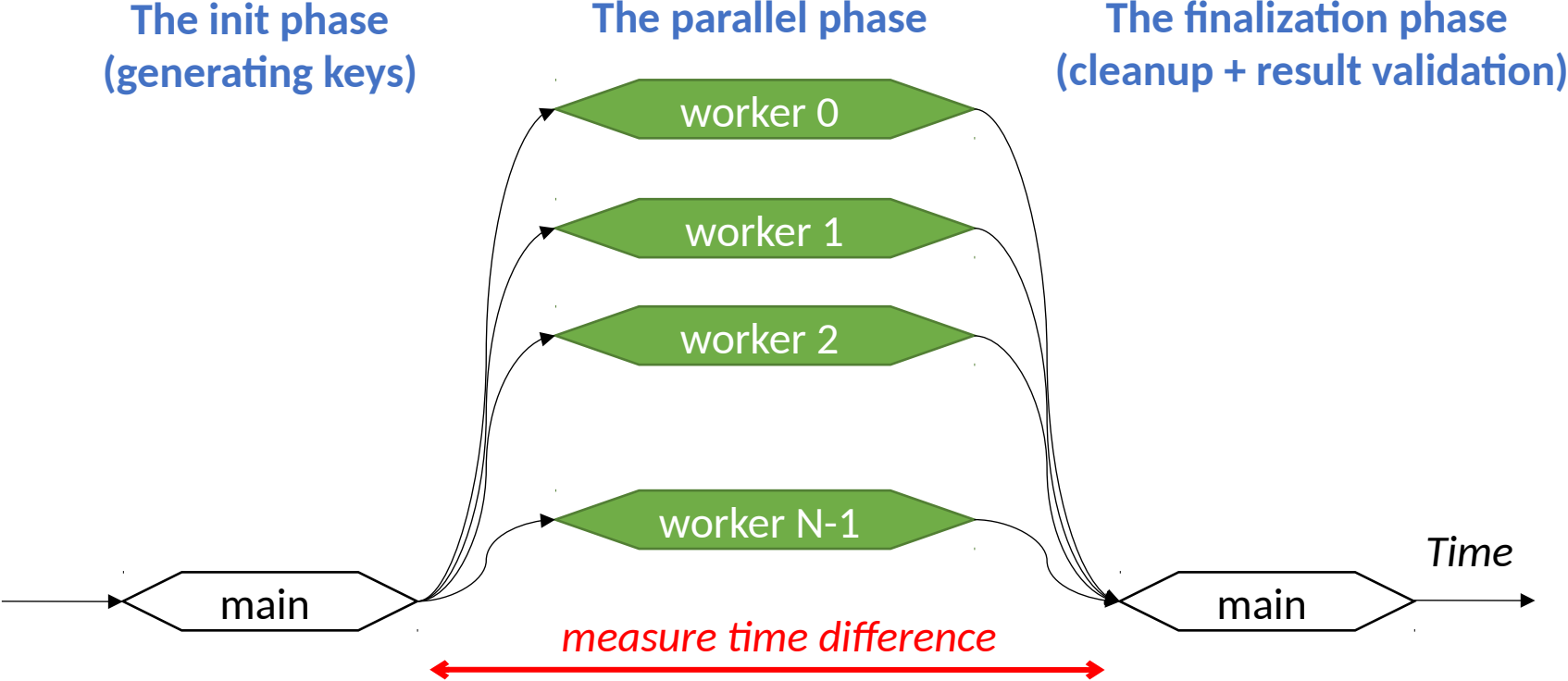
The init phase
(generating keys)
The parallel phase
The finalization phase
(cleanup + result validation)
worker 0
worker 1
worker 2
worker N-1
main
main
Time
measure time difference

Input:
an array of keys, unsorted

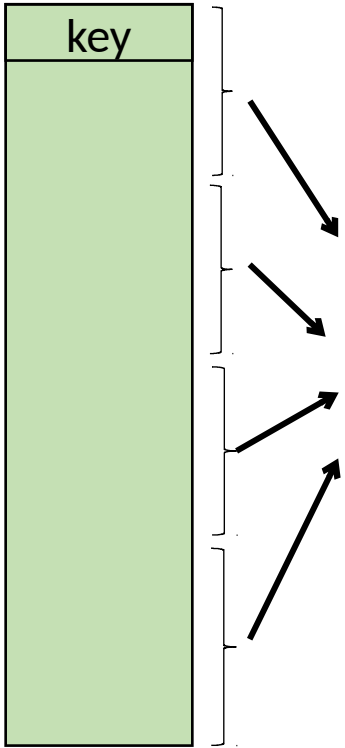

worker
threads

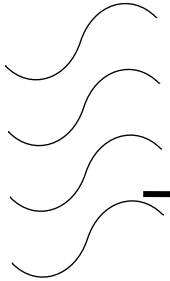

output: a doubly linked list, unsorted

list head

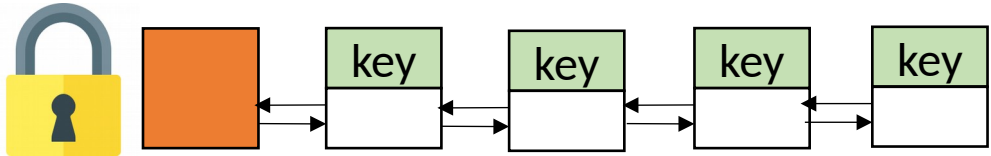

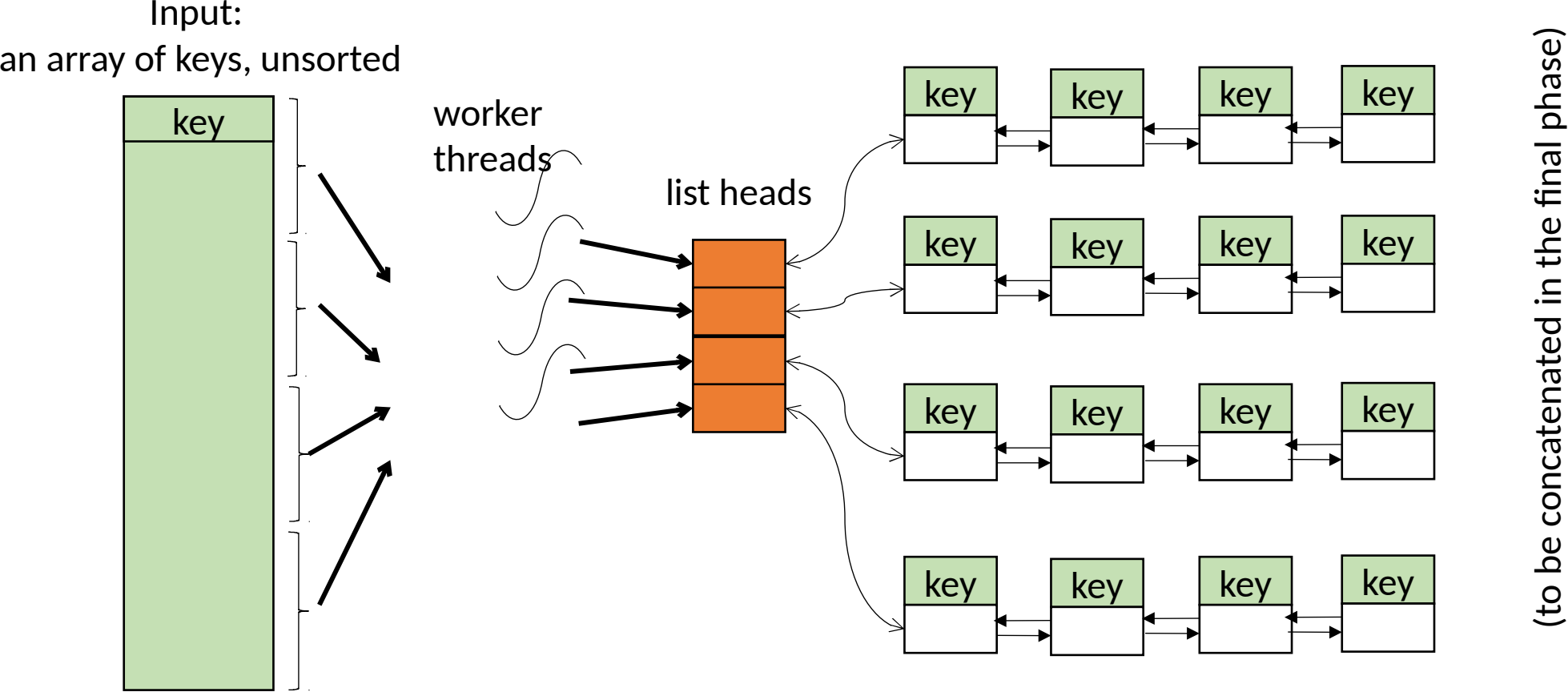
Input:
an array of keys, unsorted
key
worker
threads
list heads
key
key
key
key
key
key
key
key
key
key
key
key
key
key
key
key
(to be concatenated in the final phase)

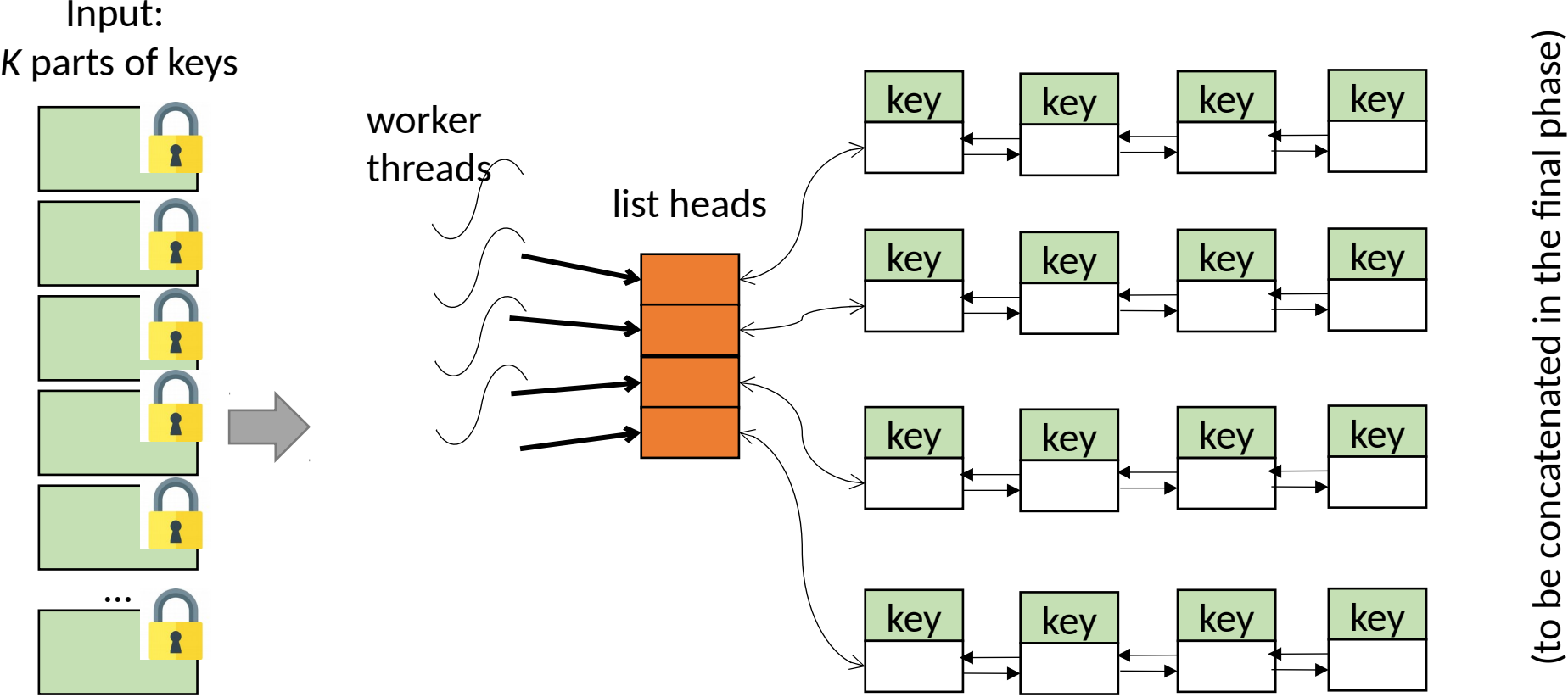
Input:
K parts of keys
...
worker
threads
list heads
key
(to be concatenated in the final phase)

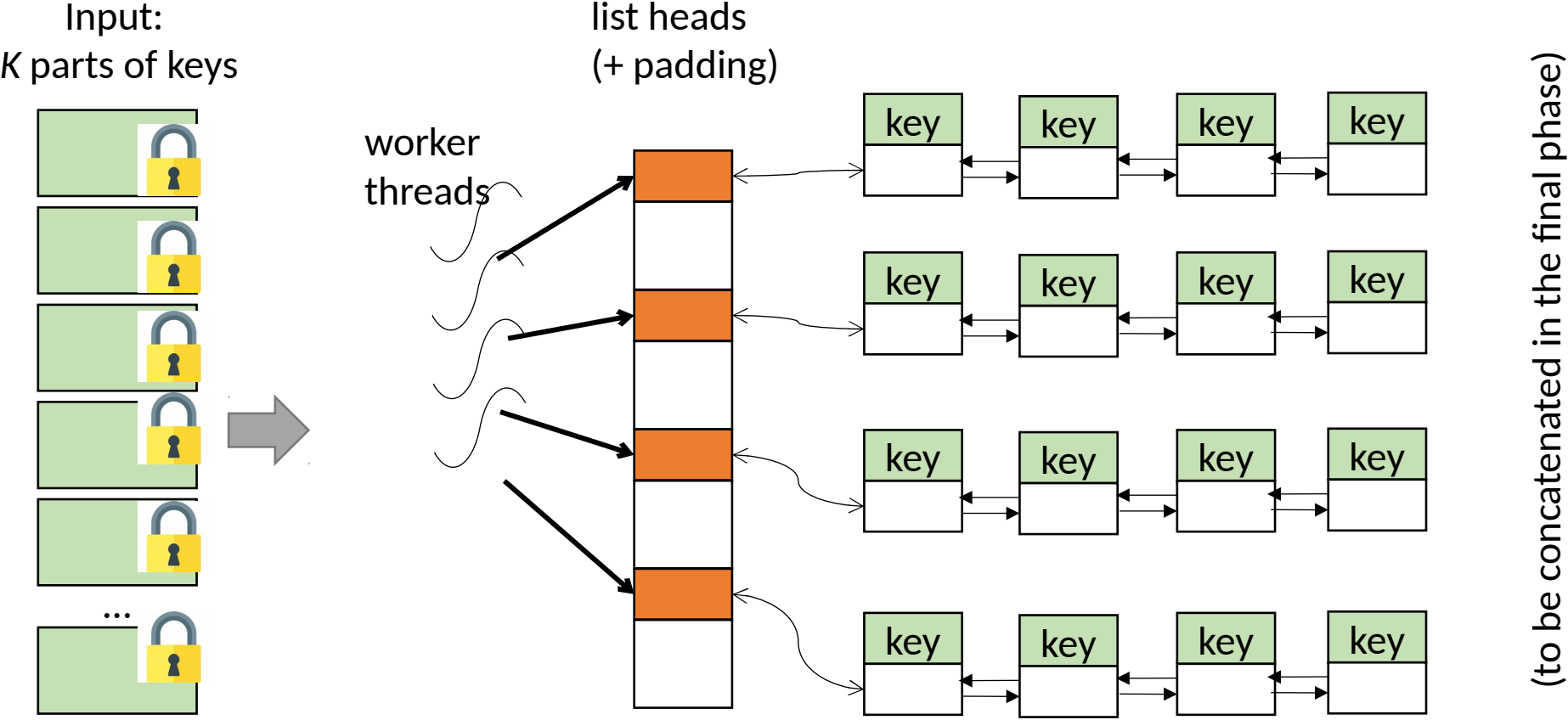
Input:
K parts of keys
...
worker
threads
list heads
(+ padding)
key
(to be concatenated in the final phase)

Input:
an array of keys

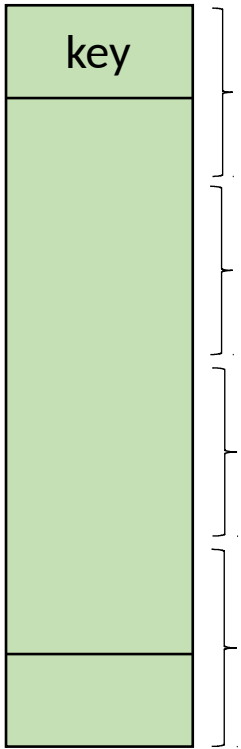

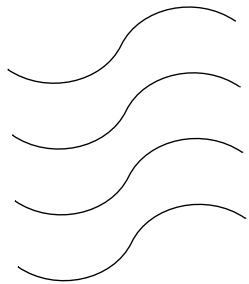
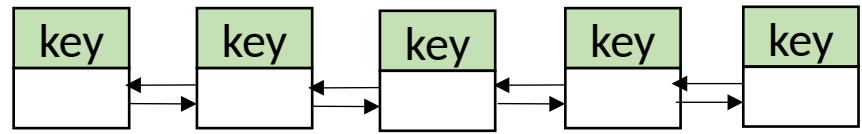
list head