Reasoning Techniques, Exploration and Discovery, Appendix

made with ❤️ for “Little ML book club”

COT: Chain of Thought

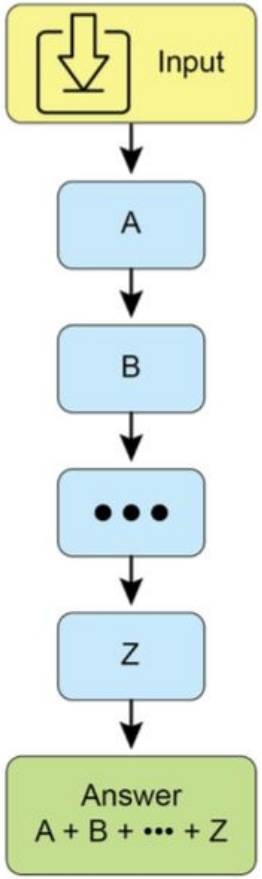


```
You are an Information Retrieval Agent. Your goal is to answer the
user's question comprehensively and accurately by thinking
step-by-step.

Here's the process you must follow:
```

```
1.  **Analyze the Query:** Understand the core subject and specific
requirements of the user's question. Identify key entities, keywords,
and the type of information being sought.
2.  **Formulate Search Queries (for Knowledge Base):** Based on your
analysis, generate a list of precise search queries that you would
use to retrieve relevant information from a knowledge base or
external tools.
3.  **Simulate Information Retrieval (Self-Correction/Reasoning):**
For each search query, mentally consider what kind of information you
expect to find. If you were to retrieve the content, what would be
the most relevant snippets? Think about potential ambiguities or
missing pieces.
4.  **Synthesize Information:** Based on the simulated retrieval and
your understanding of the user's original query, synthesize the
gathered information into a coherent and complete answer. Ensure all
aspects of the query are addressed.
5.  **Review and Refine:** Before finalizing, critically evaluate
your answer. Is it accurate? Is it comprehensive? Is it easy to
understand? Is it concise? If not, identify what needs to be improved
and how.
```

```
**User Query:** "Explain the main differences between classical
computers and quantum computers, and briefly describe a potential
application of quantum computing."

**Agent's Thought Process (Internal CoT Output - encouraged by the
prompt):**

**Thought 1 (Analyze Query):**
The user wants two things:
1.  Main differences between classical and quantum computers.
2.  One potential application of quantum computing.
Keywords: classical computers, quantum computers, differences,
potential application.

**Thought 2 (Formulate Search Queries):**
- "differences classical vs quantum computers"
- "how quantum computers work"
- "how classical computers work"
- "applications of quantum computing"

**Thought 3 (Simulate Information Retrieval & Identify Key
Concepts):**
- From "differences": Expect concepts like bits vs. qubits,
superposition, entanglement, probabilistic nature, computational
power for specific problems.
- From "how they work": Classical uses transistors/binary. Quantum
```

TOT: Tree of Thought

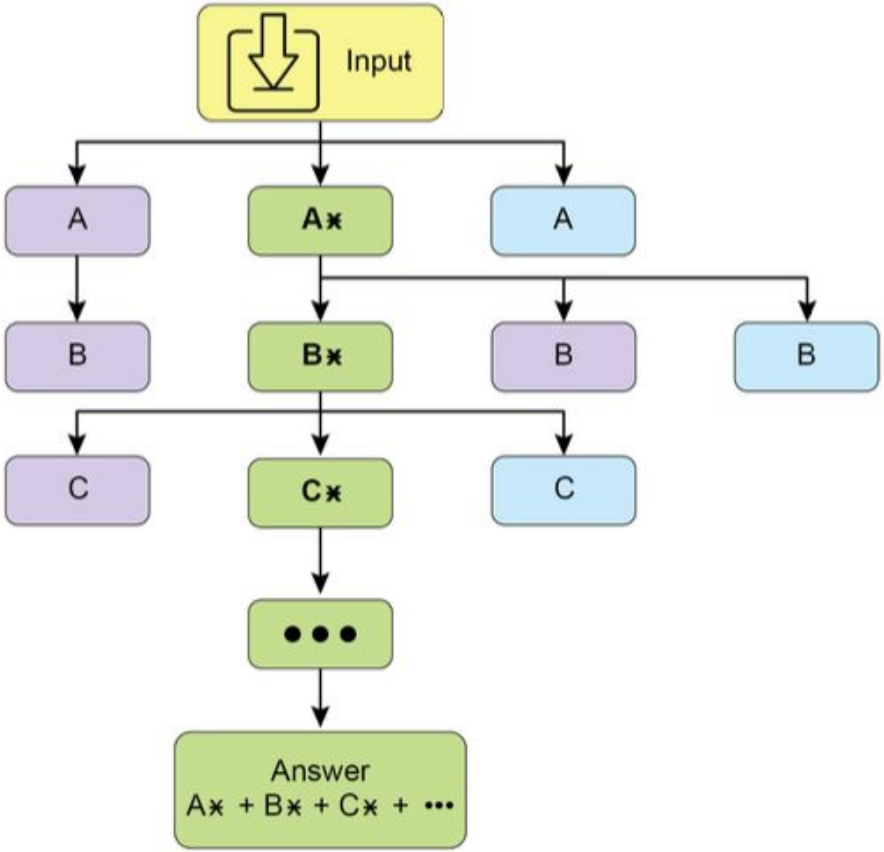

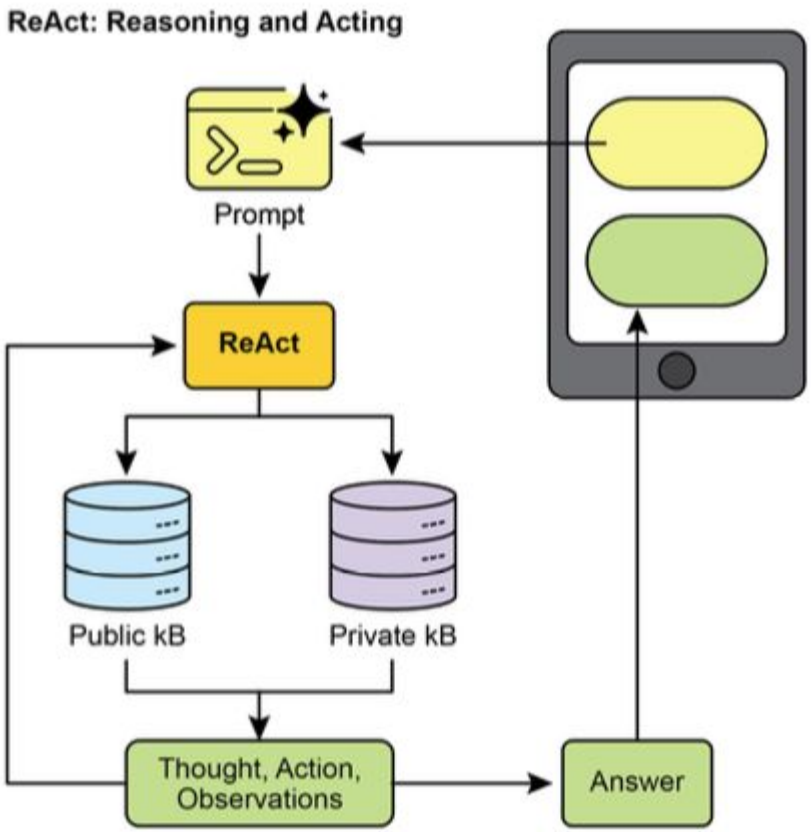
ReAct: Reasoning and Acting
Prompt
ReAct
Public kB
Private kB
Thought, Action, Observations
Answer

The core agents and their functions include (see Fig. 1):

- **Generation agent**: Initiates the process by producing initial hypotheses through literature exploration and simulated scientific debates.
- **Reflection agent**: Acts as a peer reviewer, critically assessing the correctness, novelty, and quality of the generated hypotheses.
- **Ranking agent**: Employs an Elo-based tournament to compare, rank, and prioritize hypotheses through simulated scientific debates.
- **Evolution agent**: Continuously refines top-ranked hypotheses by simplifying concepts, synthesizing ideas, and exploring unconventional reasoning.
- **Proximity agent**: Computes a proximity graph to cluster similar ideas and assist in exploring the hypothesis landscape.
- **Meta-review agent**: Synthesizes insights from all reviews and debates to identify common patterns and provide feedback, enabling the system to continuously improve.

Does Reinforcement Learning Really Incentivize Reasoning Capacity in LLMs Beyond the Base Model?

Yang Yue[1*†], **Zhiqi Chen**[1*], **Rui Lu**[1], **Andrew Zhao**[1], **Zhaokai Wang**[2], **Yang Yue**[1], **Shiji Song**[1], **and Gao Huang**[1✉]

[1] LeapLab, Tsinghua University [2] Shanghai Jiao Tong University

* Equal Contribution † Project Lead ✉ Corresponding Author

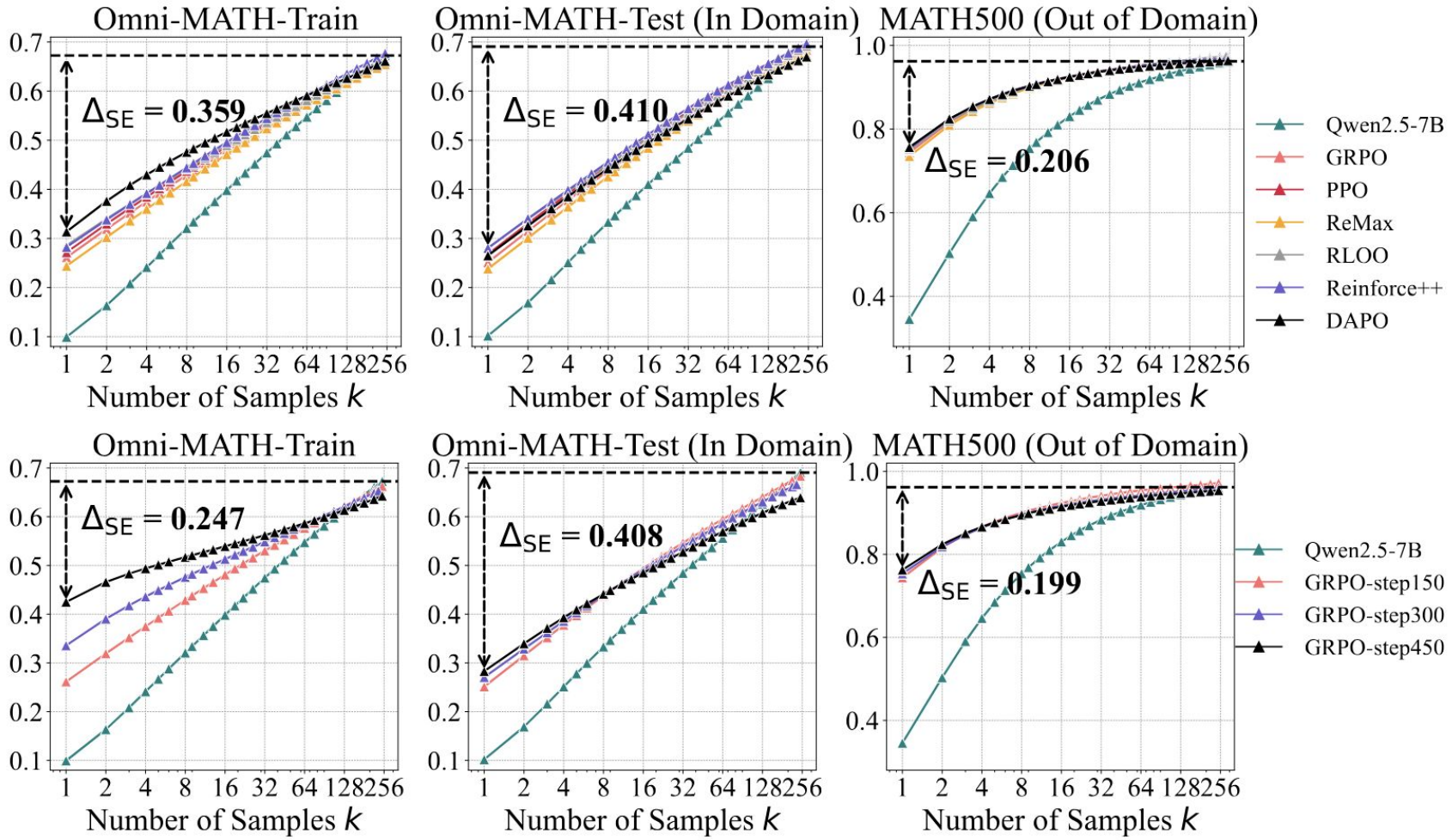
Omni-MATH-Train
Omni-MATH-Test (In Domain)
MATH500 (Out of Domain)
Δ_{SE} = 0.359
Δ_{SE} = 0.410
Δ_{SE} = 0.206
Δ_{SE} = 0.247
Δ_{SE} = 0.408
Δ_{SE} = 0.199
Number of Samples k
Qwen2.5-7B
GRPO
PPO
ReMax
RLOO
Reinforce++
DAPO
GRPO-step150
GRPO-step300
GRPO-step450

Prompting

- Few-shot
- Role prompting - models are simulators!
- Use delimiters, maintain clear structure!
- Structured output
- Use other LLMs to refine prompts!

Recap!

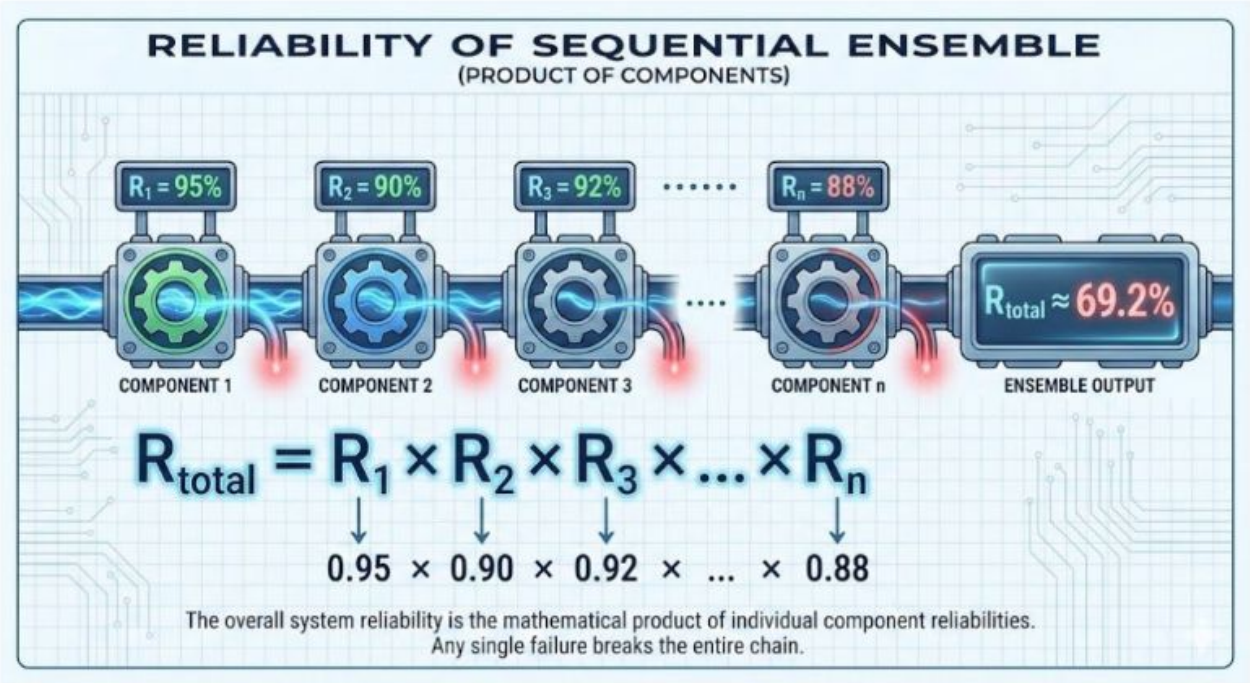

0.95^5 = 0.774
0.98^10 = 0.81

Recap!

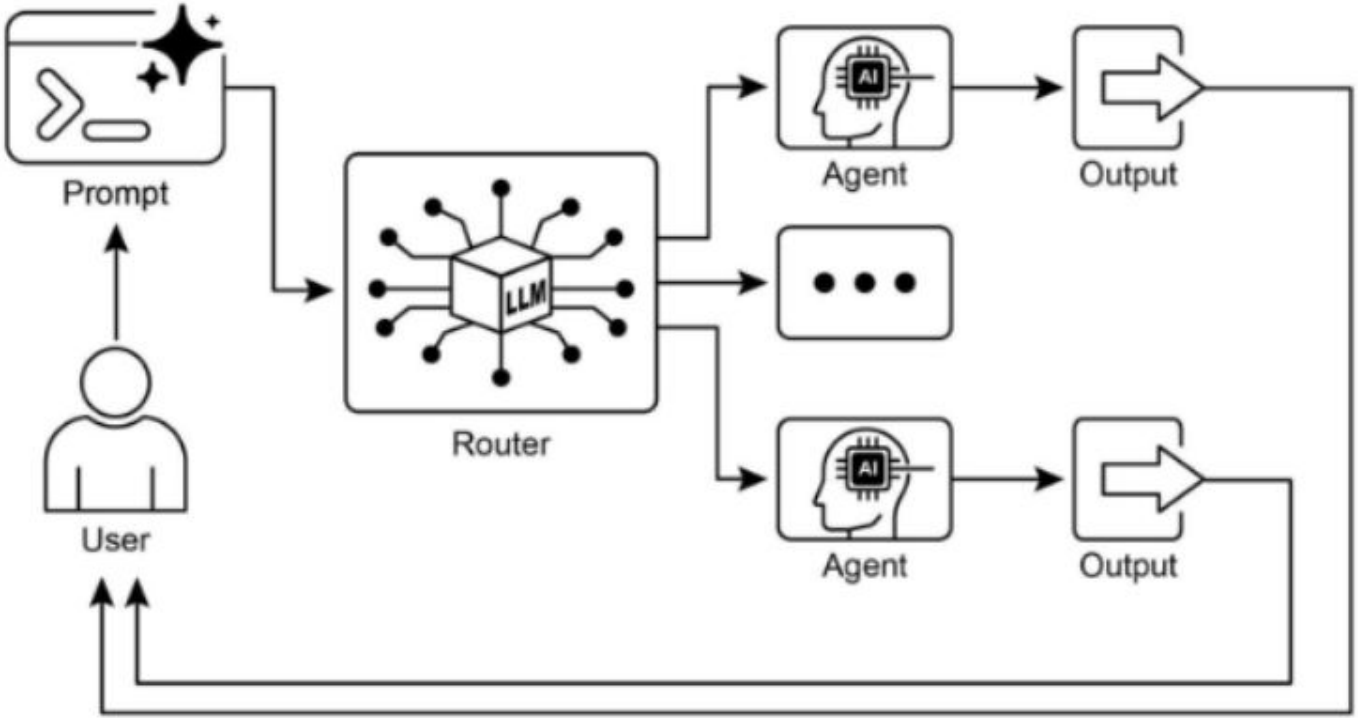

Recap!

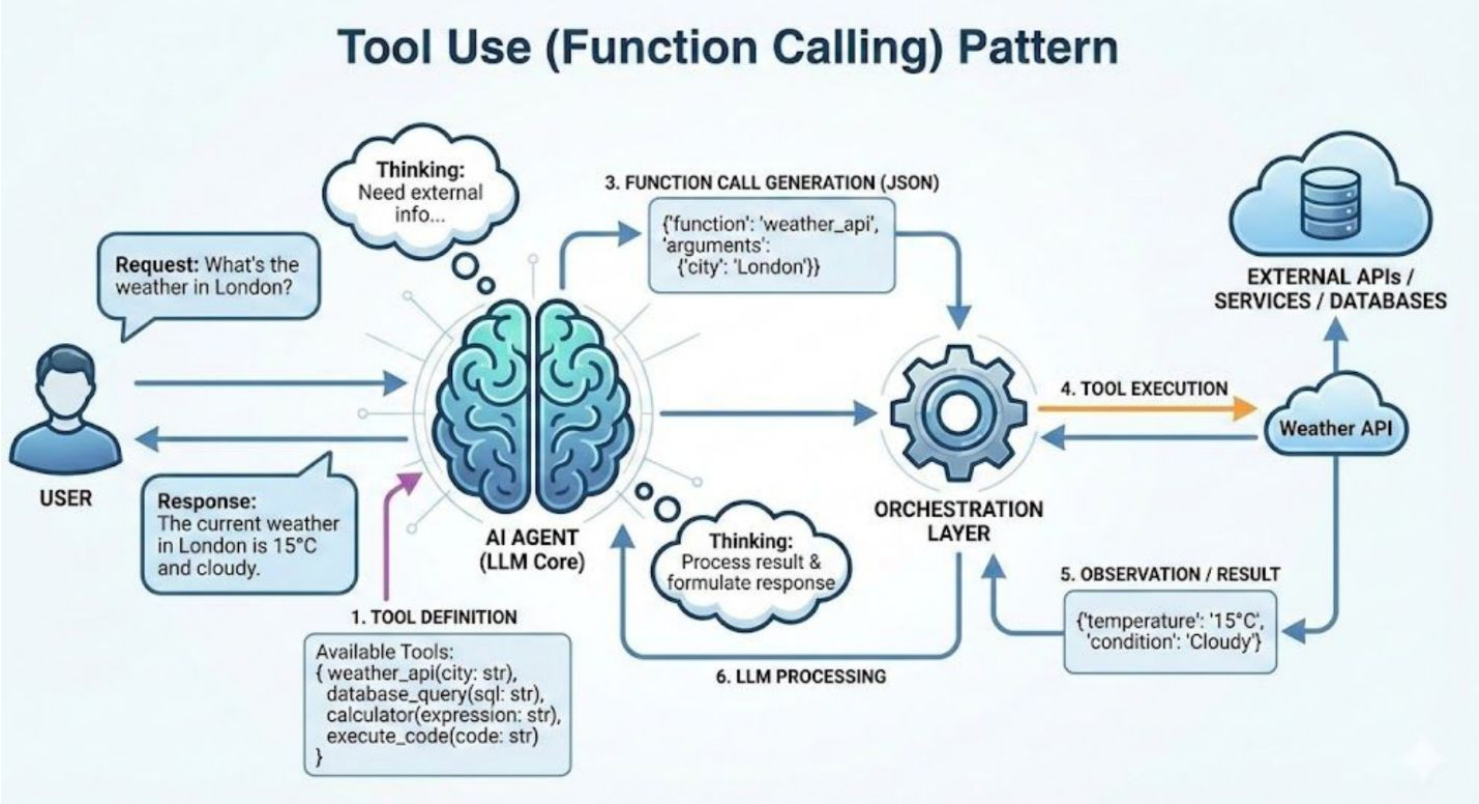
Tool Use (Function Calling) Pattern
Thinking: Need external info...
Request: What's the weather in London?
USER
Response: The current weather in London is 15°C and cloudy.
AI AGENT (LLM Core)
1. TOOL DEFINITION
Available Tools:
{ weather_api(city: str),
database_query(sql: str),
calculator(expression: str),
execute_code(code: str)
}
3. FUNCTION CALL GENERATION (JSON)
{'function': 'weather_api', 'arguments': {'city': 'London'}}
Thinking: Process result & formulate response
ORCHESTRATION LAYER
4. TOOL EXECUTION
EXTERNAL APIs / SERVICES / DATABASES
Weather API
5. OBSERVATION / RESULT
{'temperature': '15°C', 'condition': 'Cloudy'}
6. LLM PROCESSING

Recap!

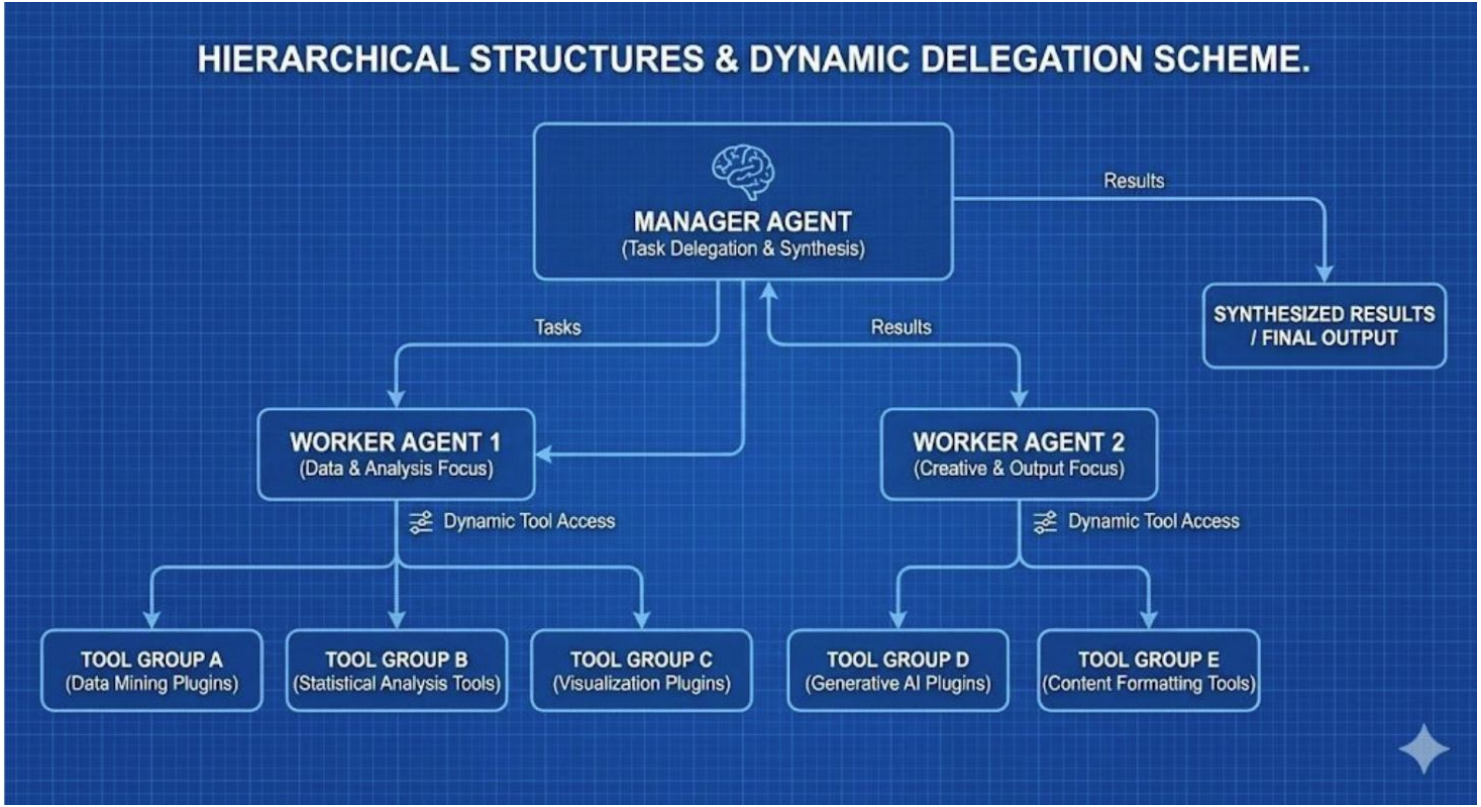
HIERARCHICAL STRUCTURES & DYNAMIC DELEGATION SCHEME.
MANAGER AGENT
(Task Delegation & Synthesis)
Results
SYNTHESIZED RESULTS / FINAL OUTPUT
Tasks
Results
WORKER AGENT 1
(Data & Analysis Focus)
WORKER AGENT 2
(Creative & Output Focus)
Dynamic Tool Access
Dynamic Tool Access
TOOL GROUP A
(Data Mining Plugins)
TOOL GROUP B
(Statistical Analysis Tools)
TOOL GROUP C
(Visualization Plugins)
TOOL GROUP D
(Generative AI Plugins)
TOOL GROUP E
(Content Formatting Tools)

Recap!

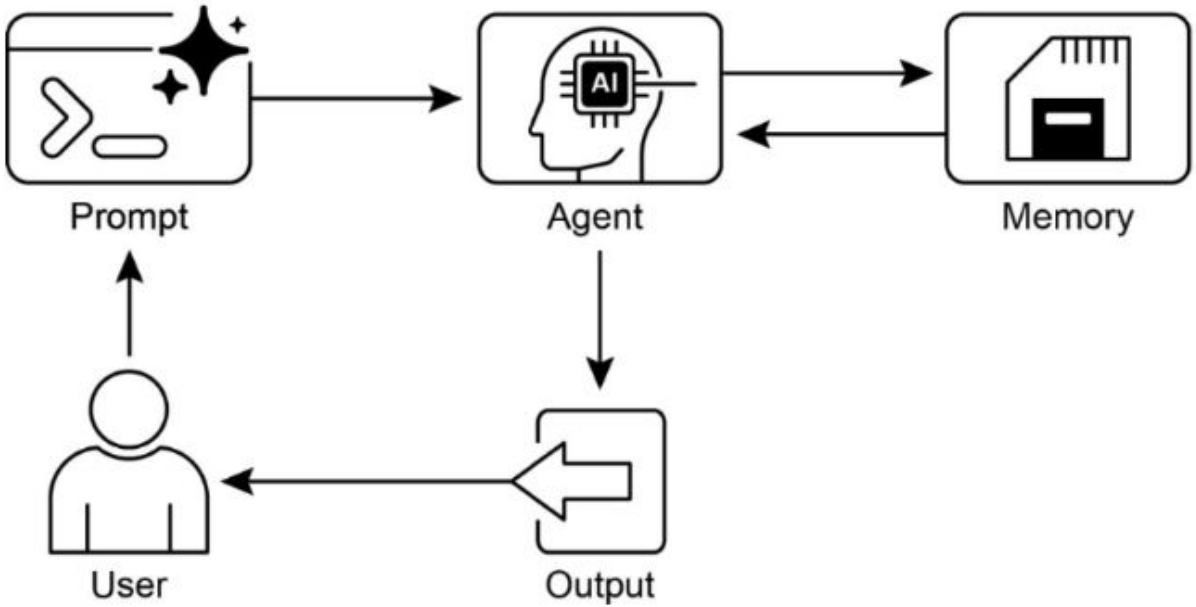

Recap!

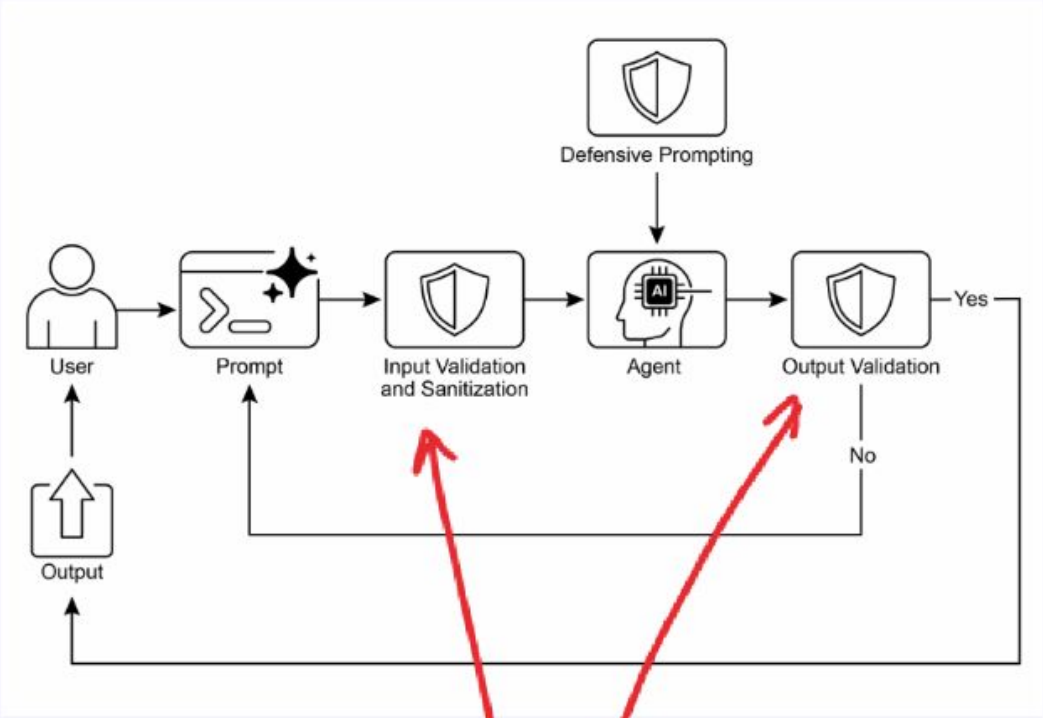

can require a separate handling OR be partially handled in a model deployed via content filters
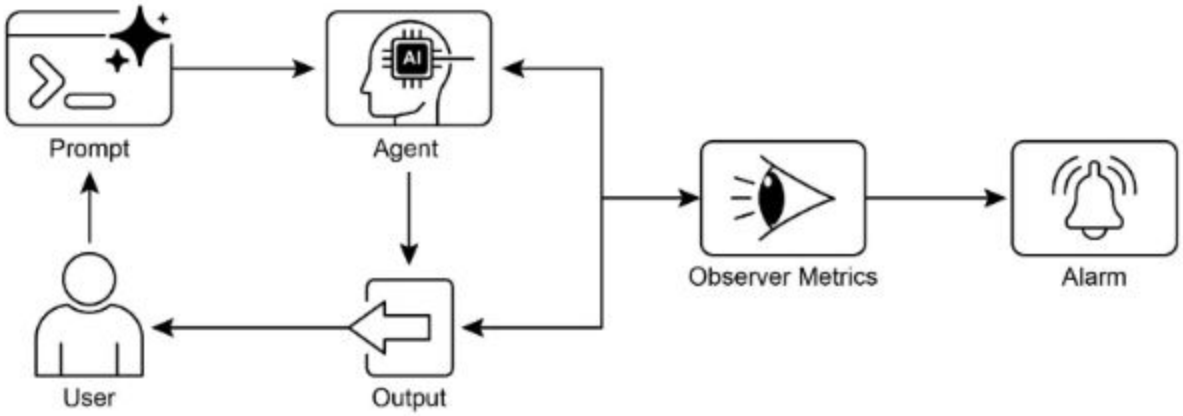
Recap!