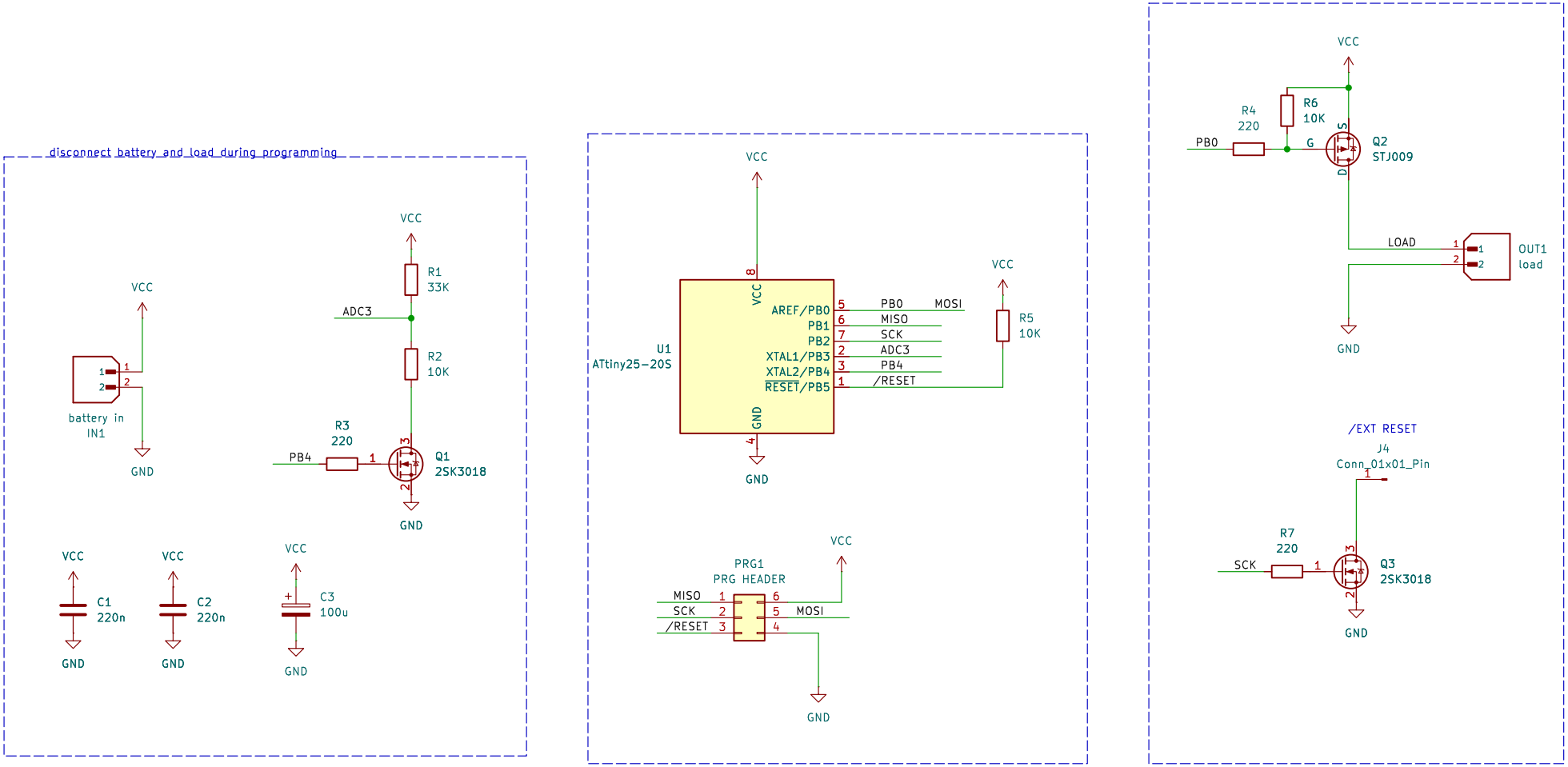

iqdata		
Sheet: /		
File: tinybms.kicad_sch		
Title: TINYBMS		
Size: A4	Date:	**Rev:**
KiCad E.D.A. 8.0.7		Id: 1/1