IEC 60669-1

Edition 4.0 2017-02

INTERNATIONAL STANDARD

NORME INTERNATIONALE

colour inside

Switches for household and similar fixed electrical installations – Part 1: General requirements

Interrupteurs pour installations électriques fixes domestiques et analogues – Partie 1: Exigences générales

IEC 60669-1:2017-02(en-fr)

International Electrotechnical Commission
Provided by IHS under license with IEC
No reproduction or networking permitted without license from IHS

THIS PUBLICATION IS COPYRIGHT PROTECTED
Copyright © 2017 IEC, Geneva, Switzerland

All rights reserved. Unless otherwise specified, no part of this publication may be reproduced or utilized in any form or by any means, electronic or mechanical, including photocopying and microfilm, without permission in writing from either IEC or IEC's member National Committee in the country of the requester. If you have any questions about IEC copyright or have an enquiry about obtaining additional rights to this publication, please contact the address below or your local IEC member National Committee for further information.

Droits de reproduction réservés. Sauf indication contraire, aucune partie de cette publication ne peut être reproduite ni utilisée sous quelque forme que ce soit et par aucun procédé, électronique ou mécanique, y compris la photocopie et les microfilms, sans l'accord écrit de l'IEC ou du Comité national de l'IEC du pays du demandeur. Si vous avez des questions sur le copyright de l'IEC ou si vous désirez obtenir des droits supplémentaires sur cette publication, utilisez les coordonnées ci-après ou contactez le Comité national de l'IEC de votre pays de résidence.

IEC Central Office
3, rue de Varembé
CH-1211 Geneva 20
Switzerland

Tel.: +41 22 919 02 11
Fax: +41 22 919 03 00
info@iec.ch
www.iec.ch

About the IEC
The International Electrotechnical Commission (IEC) is the leading global organization that prepares and publishes International Standards for all electrical, electronic and related technologies.

About IEC publications
The technical content of IEC publications is kept under constant review by the IEC. Please make sure that you have the latest edition, a corrigenda or an amendment might have been published.

IEC Catalogue - webstore.iec.ch/catalogue
The stand-alone application for consulting the entire bibliographical information on IEC International Standards, Technical Specifications, Technical Reports and other documents. Available for PC, Mac OS, Android Tablets and iPad.

IEC publications search - www.iec.ch/searchpub
The advanced search enables to find IEC publications by a variety of criteria (reference number, text, technical committee,…). It also gives information on projects, replaced and withdrawn publications.

IEC Just Published - webstore.iec.ch/justpublished
Stay up to date on all new IEC publications. Just Published details all new publications released. Available online and also once a month by email.

Electropedia - www.electropedia.org
The world's leading online dictionary of electronic and electrical terms containing 20 000 terms and definitions in English and French, with equivalent terms in 16 additional languages. Also known as the International Electrotechnical Vocabulary (IEV) online.

IEC Glossary - std.iec.ch/glossary
65 000 electrotechnical terminology entries in English and French extracted from the Terms and Definitions clause of IEC publications issued since 2002. Some entries have been collected from earlier publications of IEC TC 37, 77, 86 and CISPR.

IEC Customer Service Centre - webstore.iec.ch/csc
If you wish to give us your feedback on this publication or need further assistance, please contact the Customer Service Centre: csc@iec.ch.

A propos de l'IEC
La Commission Electrotechnique Internationale (IEC) est la première organisation mondiale qui élabore et publie des Normes internationales pour tout ce qui a trait à l'électricité, à l'électronique et aux technologies apparentées.

A propos des publications IEC
Le contenu technique des publications IEC est constamment revu. Veuillez vous assurer que vous possédez l'édition la plus récente, un corrigendum ou amendement peut avoir été publié.

Catalogue IEC - webstore.iec.ch/catalogue
Application autonome pour consulter tous les renseignements bibliographiques sur les Normes internationales, Spécifications techniques, Rapports techniques et autres documents de l'IEC. Disponible pour PC, Mac OS, tablettes Android et iPad.

Recherche de publications IEC - www.iec.ch/searchpub
La recherche avancée permet de trouver des publications IEC en utilisant différents critères (numéro de référence, texte, comité d'études,…). Elle donne aussi des informations sur les projets et les publications remplacées ou retirées.

IEC Just Published - webstore.iec.ch/justpublished
Restez informé sur les nouvelles publications IEC. Just Published détaille les nouvelles publications parues. Disponible en ligne et aussi une fois par mois par email.

Electropedia - www.electropedia.org
Le premier dictionnaire en ligne de termes électroniques et électriques. Il contient 20 000 termes et définitions en anglais et en français, ainsi que les termes équivalents dans 16 langues additionnelles. Egalement appelé Vocabulaire Electrotechnique International (IEV) en ligne.

Glossaire IEC - std.iec.ch/glossary
65 000 entrées terminologiques électrotechniques, en anglais et en français, extraites des articles Termes et Définitions des publications IEC parues depuis 2002. Plus certaines entrées antérieures extraites des publications des CE 37, 77, 86 et CISPR de l'IEC.

Service Clients - webstore.iec.ch/csc
Si vous désirez nous donner des commentaires sur cette publication ou si vous avez des questions contactez-nous: csc@iec.ch.

International Electrotechnical Commission
Provided by IHS under license with IEC
No reproduction or networking permitted without license from IHS

IEC 60669-1

Edition 4.0 2017-02

INTERNATIONAL STANDARD

NORME INTERNATIONALE

colour inside

Switches for household and similar fixed electrical installations – Part 1: General requirements

Interrupteurs pour installations électriques fixes domestiques et analogues – Partie 1: Exigences générales

INTERNATIONAL ELECTROTECHNICAL COMMISSION

COMMISSION ELECTROTECHNIQUE INTERNATIONALE

ICS 29.120.40

ISBN 978-2-8322-3901-8

Warning! Make sure that you obtained this publication from an authorized distributor.
Attention! Veuillez vous assurer que vous avez obtenu cette publication via un distributeur agréé.

® Registered trademark of the International Electrotechnical Commission
Marque déposée de la Commission Electrotechnique Internationale

International Electrotechnical Commission
Provided by IHS under license with IEC
No reproduction or networking permitted without license from IHS

CONTENTS

FOREWORD 8
1 Scope 10
2 Normative references 11
3 Terms and definitions 12
4 General requirements 17
5 General remarks on tests 17
6 Ratings 19
6.1 Rated voltage 19
6.2 Rated current 19
6.3 Preferred combinations of number of poles and ratings 20
7 Classification 21
8 Marking 22
8.1 General 22
8.2 Symbols 23
8.3 Visibility of markings 24
8.4 Marking on terminals for phase conductors 24
8.5 Marking on terminals for neutral and earth conductors 25
8.6 Marking of the switch position 25
8.7 Additional requirements for marking 26
8.8 Durability 26
9 Checking of dimensions 26
10 Protection against electric shock 26
10.1 Prevention of access to live parts 26
10.2 Requirements for operating parts 27
10.3 Requirements for accessible metal parts 27
10.4 Requirements for insulation of the mechanism 28
10.5 Requirements for insulation of the mechanism with respect to the surrounding environment 28
10.6 Requirements for switches operated indirectly 28
10.7 Requirements for switches with replaceable pull cord 29
11 Provision for earthing 29
11.1 General 29
11.2 Earthing terminals 29
11.3 Requirements for surface-type switches 29
11.4 Test for earthing connection 29
12 Terminals 30
12.1 General 30
12.2 Terminals with screw clamping for external copper conductors 30
12.3 Screwless terminals for external copper conductors 36
13 Constructional requirements 41
13.1 Mechanical requirements for insulating means 41
13.2 Installation requirements 42
13.3 Fixing of covers, cover plates and actuating members 43
13.4 Openings in normal use 44
13.5 Attachment of knobs 44

International Electrotechnical Commission
Provided by IHS under license with IEC
No reproduction or networking permitted without license from IHS

13.6 Mounting means 45
13.7 Combination of switches 45
13.8 Accessories combined with switches 45
13.9 Surface-type switches having an IP code higher than IP20 45
13.10 Installation in a box 46
13.11 Connection of a second current-carrying conductor 46
13.12 Inlet openings 46
13.13 Provision for back entry from a conduit 47
13.14 Switch provided with membranes or the like for inlet openings 48
13.15 Requirements for membranes in inlet openings 48
13.16 Pilot light units 49
14 Mechanism 49
14.1 Indication of the position 49
14.2 Rest and intermediate position 49
14.3 Undue arcing 49
14.4 Making and breaking 49
14.5 Action of the mechanism without cover or cover plate 49
14.6 Pull force for cord-operated switches 50
15 Resistance to ageing, protection provided by enclosures of switches and resistance to humidity 50
15.1 Resistance to ageing 50
15.2 Protection provided by enclosures of switches 51
15.2.1 General 51
15.2.2 Protection against access to hazardous parts and against harmful effects due to ingress of solid foreign objects 51
15.2.3 Protection against harmful effects due to ingress of water 52
15.3 Resistance to humidity 53
16 Insulation resistance and electric strength 53
16.1 General 53
16.2 Test for measuring the insulation resistance 53
16.3 Electric strength test 55
17 Temperature rise 58
17.1 General 58
17.2 Switches incorporating pilot lights 59
18 Making and breaking capacity 60
18.1 General 60
18.2 Overload 60
18.3 Overload test with filament lamps 62
19 Normal operation 62
19.1 Test for switches intended for inductive loads 62
19.2 Test for switches intended for externally ballasted lamp loads 64
19.3 Test for switches intended for self ballasted lamp loads 67
20 Mechanical strength 70
20.1 General 70
20.2 Pendulum hammer test 70
20.3 Test on the main parts of surface-type switches 73
20.4 Screwed glands 73
20.5 Covers, cover plates or actuating members – accessibility to live parts 73

International Electrotechnical Commission
Provided by IHS under license with IEC
No reproduction or networking permitted without license from IHS

20.5.1 General ... 73
20.5.2 Verification of the non-removal of covers, cover plates or actuating members ... 74
20.5.3 Verification of the removal of covers, cover plates or actuating members ... 74
20.6 Covers, cover plates or actuating members – accessibility to non-earthed metal parts separated from live parts ... 74
20.7 Covers, cover plates or actuating members – accessibility to insulating parts, earthed metal parts, the live parts of SELV ≤ 25 V AC or metal parts separated from live parts ... 74
20.8 Covers, cover plates or actuating members – application of gauges ... 75
20.9 Grooves, holes and reverse tapers ... 75
20.10 Additional test for cord-operated switch ... 75
21 Resistance to heat ... 75
21.1 General ... 75
21.2 Basic heating test ... 76
21.3 Ball-pressure test on parts of insulating material necessary to retain current-carrying parts and parts of the earthing circuit in position ... 76
21.4 Ball-pressure test on parts of insulating material not necessary to retain current-carrying parts and parts of the earthing circuit in position ... 76
22 Screws, current-carrying parts and connections ... 77
22.1 General ... 77
22.2 Correct insertion of screws ... 77
22.3 Contact pressure of electrical connections ... 78
22.4 Screws and rivets used both as electrical and mechanical connections ... 78
22.5 Material of current-carrying parts ... 78
22.6 Contacts subjected to sliding actions ... 79
22.7 Thread-forming and thread-cutting screws ... 79
23 Creepage distances, clearances and distances through sealing compound ... 79
23.1 General ... 79
23.2 Insulating compound ... 82
24 Resistance of insulating material to abnormal heat, to fire and to tracking ... 82
24.1 Resistance to abnormal heat and to fire ... 82
24.2 Resistance to tracking ... 83
25 Resistance to rusting ... 83
26 EMC requirements ... 84
26.1 Immunity ... 84
26.2 Emission ... 84
Annex A (normative) Additional requirements for switches having facilities for the outlet and retention of flexible cables ... 104
Annex B (informative) Changes planned for the future in order to align IEC 60669-1 with the requirements of IEC 60998 (all parts), IEC 60999 (all parts) and IEC 60228 ... 107
Annex C (informative) Circuit development (19.3) ... 124
C.1 Rationale ... 124
C.2 I_{peak} and I^2t for normal operation tests ... 124
C.2.1 General ... 124
C.2.2 Switching a single lamp ... 124
C.2.3 Switching multiple lamps ... 126
Annex D (informative) Additional requirements for insulation-piercing terminals ... 128

International Electrotechnical Commission
Provided by IHS under license with IEC
No reproduction or networking permitted without license from IHS

Annex E (informative) Additional requirements and tests for switches intended to be used at a temperature lower than −5 °C 138
Bibliography 140

Figure 1 – Pillar terminals 85
Figure 2 – Screw head terminals and stud terminals 87
Figure 3 – Saddle terminals 87
Figure 4 – Lug terminals 88
Figure 5 – Mantle terminals 89
Figure 6 – Thread-forming screw 89
Figure 7 – Thread-cutting screw 89
Figure 8 – Classification according to connections 90
Figure 9 – Test apparatus for checking damage to conductors 91
Figure 10 – Information for deflection test 92
Figure 11 – Circuit diagrams for making and breaking capacity and normal operation 93
Figure 12 – Circuit diagrams for testing switches 94
Figure 13 – Arrangement for test on cover-plates 94
Figure 14 – Gauge (thickness: about 2 mm) for the verification of the outline of covers, cover-plates or actuating members 95
Figure 15 – Example of application of the gauge of Figure 14 on covers fixed without screws on a mounting surface or supporting surface 96
Figure 16 – Examples of applications of the gauge of Figure 14 in accordance with the requirements of 20.8 97
Figure 17 – Gauge for verification of grooves, holes and reverse tapers 98
Figure 18 – Sketch showing the direction of application of the gauge of Figure 17 98
Figure 19 – Ball-pressure apparatus 99
Figure 20 – Determining parts of insulating material to be tested – Diagrammatic representation (see 24.1) 99
Figure 21 – Test wall in accordance with the requirements of 15.2.3 100
Figure 22 – Direction for the conductor pull of 30 N for 1 min 102
Figure 23 – Examples of membranes and grommets 103
Figure 1 – Pillar terminals 122
Figure C.1 – 120 V 15 W (LT spice model) 125
Figure C.2 – 230 V 15 W (LT spice model) 126
Figure C.3 – Model for multiple lamp loads 127
Figure C.4 – I_{peak} and I^2t for multiple lamp loads 127
Figure D.1 – Example of insulation-piercing terminals 136
Figure D.2 – Example of test-points 136
Figure D.3 – Temperature cycle for the voltage drop test of 12.4.11 137

Table 1 – Number of specimens needed for the tests 18
Table 2 – Relationship between rated current of the switch and rated power of the SBL circuit 20
Table 3 – Preferred combinations of numbers of poles and ratings 20

International Electrotechnical Commission
Provided by IHS under license with IEC
No reproduction or networking permitted without license from IHS

Table 4 – Relationship between rated currents and connectable cross-sectional areas of copper conductors 30
Table 5 – Tightening torque for the verification of the mechanical strength of screw-type terminals 32
Table 6 – Test values for flexion and pull out for copper conductors 33
Table 7 – Test values for pulling out test 34
Table 8 – Relationship between rated currents and connectable cross-sectional areas of copper conductors for screwless terminals 36
Table 9 – Test current for the verification of electrical and thermal stresses in normal use of screwless terminals 39
Table 10 – Cross-sectional areas of rigid copper conductors for deflection test of screwless terminals 41
Table 11 – Deflection test forces 41
Table 12 – Forces to be applied to covers, cover-plates or actuating members whose fixing is not dependent on screws 44
Table 13 – External cable diameter limits for surface type switches 47
Table 14 – Points of application of the test voltage for the verification of insulation resistance and electric strength 54
Table 15 – Test voltage, points of application and minimum values of insulating resistance for the verification of electric strength 57
Table 16 – Temperature-rise test currents and cross-sectional areas of copper conductors 58
Table 17 – Fractions of total number of operations 61
Table 18 – Number of operations for normal operation test 63
Table 19 – Values for I_{peak} and I^2t depending on the type of distribution system 68
Table 20 – Calculated circuit parameters 68
Table 21 – Height of fall for impact test 71
Table 22 – Torque for the verification of the mechanical strength of glands 73
Table 23 – Creepage distances, clearances and distances through insulating sealing compound 80
Table A.1 – Limits of external dimensions of flexible cables 105
Table 4 – Relationship between rated currents and connectable cross-sectional areas of copper conductors 108
Table 5 – Tightening torque for the verification of the mechanical strength of screw-type terminals 111
Table 6 – Test values for flexion and pull out of copper conductors 111
Table 7 – Relationship between pull force and cross-sectional area 112
Table 8 – Relationship between rated currents and connectable cross-sectional areas of copper conductors for screwless terminals 115
Table 9 – Test current for the verification of electrical and thermal stresses in normal use for screwless terminals 119
Table 10 – Cross-sectional areas of rigid copper conductors for deflection test of screwless terminals 121
Table 11 – Deflection test forces 121
Table C.1 – Lamp 124
Table D.1 – Specimens needed for Clause 12 for insulation-piercing terminals (IPTs) 129
Table D.2 – Relationship between rated currents and connectable cross-sectional areas of copper conductors for insulation-piercing terminals 131

International Electrotechnical Commission
Provided by IHS under license with IEC
No reproduction or networking permitted without license from IHS

Table D.3 – Test current for the verification of electrical and thermal stresses in normal use of insulation-piercing terminals 135

International Electrotechnical Commission
Provided by IHS under license with IEC
No reproduction or networking permitted without license from IHS

INTERNATIONAL ELECTROTECHNICAL COMMISSION

SWITCHES FOR HOUSEHOLD AND SIMILAR FIXED ELECTRICAL INSTALLATIONS –

Part 1: General requirements

FOREWORD

1) The International Electrotechnical Commission (IEC) is a worldwide organization for standardization comprising all national electrotechnical committees (IEC National Committees). The object of IEC is to promote international co-operation on all questions concerning standardization in the electrical and electronic fields. To this end and in addition to other activities, IEC publishes International Standards, Technical Specifications, Technical Reports, Publicly Available Specifications (PAS) and Guides (hereafter referred to as "IEC Publication(s)"). Their preparation is entrusted to technical committees; any IEC National Committee interested in the subject dealt with may participate in this preparatory work. International, governmental and non-governmental organizations liaising with the IEC also participate in this preparation. IEC collaborates closely with the International Organization for Standardization (ISO) in accordance with conditions determined by agreement between the two organizations.
2) The formal decisions or agreements of IEC on technical matters express, as nearly as possible, an international consensus of opinion on the relevant subjects since each technical committee has representation from all interested IEC National Committees.
3) IEC Publications have the form of recommendations for international use and are accepted by IEC National Committees in that sense. While all reasonable efforts are made to ensure that the technical content of IEC Publications is accurate, IEC cannot be held responsible for the way in which they are used or for any misinterpretation by any end user.
4) In order to promote international uniformity, IEC National Committees undertake to apply IEC Publications transparently to the maximum extent possible in their national and regional publications. Any divergence between any IEC Publication and the corresponding national or regional publication shall be clearly indicated in the latter.
5) IEC itself does not provide any attestation of conformity. Independent certification bodies provide conformity assessment services and, in some areas, access to IEC marks of conformity. IEC is not responsible for any services carried out by independent certification bodies.
6) All users should ensure that they have the latest edition of this publication.
7) No liability shall attach to IEC or its directors, employees, servants or agents including individual experts and members of its technical committees and IEC National Committees for any personal injury, property damage or other damage of any nature whatsoever, whether direct or indirect, or for costs (including legal fees) and expenses arising out of the publication, use of, or reliance upon, this IEC Publication or any other IEC Publications.
8) Attention is drawn to the Normative references cited in this publication. Use of the referenced publications is indispensable for the correct application of this publication.
9) Attention is drawn to the possibility that some of the elements of this IEC Publication may be the subject of patent rights. IEC shall not be held responsible for identifying any or all such patent rights.

International Standard IEC 60669-1 has been prepared by subcommittee 23B: Plugs, socket-outlets and switches, of IEC technical committee 23:

This fourth edition cancels and replaces the third edition published in 1998, Amendment 1:1999 and Amendment 2:2006. This edition constitutes a technical revision.

This edition includes the following significant technical changes with respect to the previous edition:

a) change of the scope for motor load switches;
b) deletion of some dated normative references;
c) changes to the definitions;
d) in Clause 5 the number of specimens to be used for the tests are clearly given in Table 1 (Corresponding Annex A of IEC 60669-1:1998 was therefore deleted);

International Electrotechnical Commission
Provided by IHS under license with IEC
No reproduction or networking permitted without license from IHS

e) in Clause 5 it was clarified on which switches the tests of Clause 19 shall be carried out;

f) requirements concerning 13 A switches have been included;

g) mandatory indication that a terminal is suitable for rigid conductor only;

h) requirements and test conditions for flexible conductors have been included in Clause 12;

i) requirements for pilot light units have been included;

j) new test for self-ballasted lamp loads in 19.3;

k) Table 20 has been completely redrawn to cover normal, mini and micro-gap switches and renumbered Table 21;

l) new informative Annex B including changes planned for the future in order to align IEC 60669-1 with the requirements of IEC 60998 (all parts), IEC 60999 (all parts) and IEC 60228;

m) new informative Annex C about the circuit development for 19.3;

n) new informative Annex D including additional requirements for insulation-piercing terminals;

o) new informative Annex E including additional requirements and tests for switches intended to be used at a temperature lower than −5 °C.

The text of this standard is based on the following documents:

FDIS	Report on voting
23B/1235/FDIS	23B/1241/RVD

Full information on the voting for the approval of this standard can be found in the report on voting indicated in the above table.

This publication has been drafted in accordance with the ISO/IEC Directives, Part 2.

In this standard, the following print types are used:

- *compliance statements: in italic type*

A list of all parts in the IEC 60669 series, published under the general title *Switches for household and similar fixed electrical installations*, can be found on the IEC website.

The committee has decided that the contents of this publication will remain unchanged until the stability date indicated on the IEC website under "http://webstore.iec.ch" in the data related to the specific publication. At this date, the publication will be

- reconfirmed,
- withdrawn,
- replaced by a revised edition, or
- amended.

IMPORTANT – The 'colour inside' logo on the cover page of this publication indicates that it contains colours which are considered to be useful for the correct understanding of its contents. Users should therefore print this document using a colour printer.

International Electrotechnical Commission
Provided by IHS under license with IEC
No reproduction or networking permitted without license from IHS

SWITCHES FOR HOUSEHOLD AND SIMILAR FIXED ELECTRICAL INSTALLATIONS –

Part 1: General requirements

1 Scope

This part of IEC 60669 applies to manually operated general purpose functional switches, for alternating current (AC) only with a rated voltage not exceeding 440 V with a rated current not exceeding 63 A, intended for household and similar fixed electrical installations, either indoors or outdoors.

For switches provided with screwless terminals, the rated current is limited to 16 A.

NOTE 1 The rated current is limited to 16 A for switches provided with insulation piercing terminals (IPT's) according to Annex D.

Switches covered by this document are, where applicable, intended for the control in normal use of all of the following loads:

– a circuit for a tungsten filament lamp load;
– a circuit for an externally ballasted lamp load (for example LED, CFL, fluorescent lamp load);
– a circuit for a self ballasted lamp load (for example LEDi or CFLi);
– a circuit for a substantially resistive load with a power factor not less than 0,95;
– a single phase circuit for motor load with a rated current not exceeding 3 A at 250 V (750 VA) and 4,5 A at 120 V (540 VA) and a power factor not less than 0,6. This applies to both switches rated not less than 10 A that have not undergone additional tests and to momentary switches rated not less than 6 A that have not undergone additional tests.

NOTE 2 In the following country the suitability of a switch intended to control the inrush current of a motor shall be tested: AU.

This document also applies to boxes for switches, with the exception of mounting boxes for flush-type switches.

NOTE 3 General requirements for boxes for flush-type switches are given in IEC 60670-1.

It also applies to switches such as

– switches incorporating pilot lights;
– electromagnetic remote control switches (particular requirements are given in IEC 60669-2-2);
– switches incorporating a time-delay device (particular requirements are given in IEC 60669-2-3);
– combinations of switches and other functions (with the exception of switches combined with fuses);
– electronic switches (particular requirements are given in IEC 60669-2-1);
– switches having facilities for the outlet and retention of flexible cables (see Annex A);
– isolating switches (particular requirements are given in IEC 60669-2-4);
– switches and related accessories for use in home and building electronic systems (particular requirements are given in IEC 60669-2-5);
– firemen's switches (particular requirements are given in IEC 60669-2-6).

International Electrotechnical Commission
Provided by IHS under license with IEC
No reproduction or networking permitted without license from IHS

Switches complying with this document are suitable for use at ambient temperatures not normally exceeding +40 °C, but their average over a period of 24 h does not exceed +35 °C, with a lower limit of the ambient air temperature of –5 °C.

NOTE 4 For lower temperatures see Annex E.

Switches complying with this document are suitable only for incorporation in equipment in such a way and in such a place that it is unlikely that the surrounding ambient temperature exceeds +35 °C.

In locations where special conditions prevail, such as in ships, vehicles and the like and in hazardous locations, for example where explosions are liable to occur, special construction and/or additional requirements may be required.

2 Normative references

The following documents are referred to in the text in such a way that some or all of their content constitutes requirements of this document. For dated references, only the edition cited applies. For undated references, the latest edition of the referenced document (including any amendments) applies.

IEC 60038:2009, *IEC standard voltages*

IEC 60068-2-75:2014, *Environmental testing – Part 2-75: Tests – Test Eh: Hammer tests*

IEC 60112:2009, *Method for the determination of the proof and the comparative tracking indices of solid insulating materials*

IEC 60212:2010, *Standard conditions for use prior to and during the testing of solid electrical insulation materials*

IEC 60227-5:2011, *Polyvinyl chloride insulated cables of rated voltages up to and including 450/750 V – Part 5: Flexible cables (cords)*

IEC 60228:2004, *Conductors of insulated cables*

IEC 60245-4:2011, *Rubber insulated cables – Rated voltages up to and including 450/750 V – Part 4: Cords and flexible cables*

IEC 60417, *Graphical symbols for use on equipment* (available from: http://www.graphical-symbols.info/equipment)

IEC 60529:1989, *Degrees of protection provided by enclosures (IP Code)*
IEC 60529:1989/AMD1:1999
IEC 60529:1989/AMD2:2013

IEC 60669-2-1:2002, *Switches for household and similar fixed electrical installations – Part 2-1: Particular requirements – Electronic switches*
IEC 60669-2-1:2002/AMD1:2008
IEC 60669-2-1:2002/AMD2:2015

IEC 60695-2-10:2000, *Fire hazard testing – Part 2-10: Glowing/hot-wire based test methods – Glow-wire apparatus and common test procedure*

IEC 60695-2-11:2014, *Fire hazard testing – Part 2-11: Glowing/hot-wire based test methods – Glow-wire flammability test method for end-products (GWEPT)*

International Electrotechnical Commission
Provided by IHS under license with IEC
No reproduction or networking permitted without license from IHS

IEC 60998-1:2002, *Connecting devices for low-voltage circuits for household and similar purposes – Part 1: General requirements*

IEC 60998-2-1, *Connecting devices for low-voltage circuits for household and similar purposes – Part 2-1: Particular requirements for connecting devices as separate entities with screw-type clamping units*

IEC 60998-2-2, *Connecting devices for low-voltage circuits for household and similar purposes – Part 2-2: Particular requirements for connecting devices as separate entities with screwless-type clamping units*

IEC 60998-2-3, *Connecting devices for low-voltage circuits for household and similar purposes – Part 2-3: Particular requirements for connecting devices as separate entities with insulation-piercing clamping units*

IEC 60998-2-4, *Connecting devices for low-voltage circuits for household and similar purposes – Part 2-4: Particular requirements for twist-on connecting devices*

IEC 61032:1997, *Protection of persons and equipment by enclosures – Probes for verification*

ISO 1456:2009, *Metallic and other inorganic coatings – Electrodeposited coatings of nickel, nickel plus chromium, copper plus nickel and of copper plus nickel plus chromium*

ISO 2081:2008, *Metallic and other inorganic coatings – Electroplated coatings of zinc with supplementary treatments on iron or steel*

ISO 2093:1986, *Electroplated coatings of tin – Specification and test methods*

3 Terms and definitions

For the purposes of this document, the following terms and definitions apply.

ISO and IEC maintain terminological databases for use in standardization at the following addresses:

- IEC Electropedia: available at http://www.electropedia.org/
- ISO Online browsing platform: available at http://www.iso.org/obp

NOTE Where the terms "voltage" and "current" are used, they are rms values unless otherwise specified.

3.1
switch
device designed to make or break the current in one or more electric circuits

3.1.1
on/off switch
switch for alternatively closing and opening one or more electric circuits.

[SOURCE: IEC 60050-151:2001, 151-12-23]

3.1.2
momentary contact switch
switch which returns its contacts automatically to the initial state after operation.

Note 1 to entry: Momentary contact switches are intended to operate, for example, bells, electromagnetic remote control switches, time-delay switches and electronic switches.

International Electrotechnical Commission
Provided by IHS under license with IEC
No reproduction or networking permitted without license from IHS

3.1.3
push-button switch
switch having a single actuator which moves with a single motion when operated by an external, manual force usually applied by the finger or palm of the hand and having stored energy return

3.1.4
cord-operated switch
switch the operating means of which is a cord which has to be pulled in order to change its contact state

3.1.5
switch of normal-gap construction
switch construction having a clearance between the contacts in the open position of not less than 3 mm

3.1.6
switch of mini-gap construction
switch construction having a clearance between the contacts which is less than 3 mm but is not less than 1,2 mm

3.1.7
switch of micro-gap construction
switch construction having a clearance between the contacts in the open position of less than 1,2 mm

3.2
one operation
transfer of the moving contacts from one operating position to another

3.3
terminal
conductive part of one pole, composed of one or more clamping unit(s) and insulation if necessary

3.4
clamping unit
part or parts of a terminal necessary for the mechanical clamping and the electrical connection of the conductor(s)

3.5
screw-type terminal
terminal intended for the connection, by clamping only, of (an) external rigid or flexible conductor(s)

3.5.1
pillar terminal
screw-type terminal in which the conductor(s) is (are) inserted into a hole or cavity, where it is clamped under the shank of the screw or screws

Note 1 to entry: The clamping pressure can be applied directly by the shank of the screw or through an intermediate clamping part to which pressure is applied by the shank of the screw.

Note 2 to entry: Examples of pillar terminals are shown in Figure 1.

[SOURCE: IEC 60050-442:1998, 442-06-22, modified — “or screws” has been added because in some constructions there is more than one screw.]

International Electrotechnical Commission
Provided by IHS under license with IEC
No reproduction or networking permitted without license from IHS

3.5.2
screw head terminal
screw-type terminal in which the conductor is clamped under the head of the screw

Note 1 to entry: The clamping pressure can be applied directly by the head of the screw or through an intermediate part, such as a washer, clamping plate or anti-spread device.

Note 2 to entry: Examples of screw head terminals are shown in Figure 2.

3.5.3
stud terminal
screw-type terminal in which the conductor is clamped under a nut

Note 1 to entry: The clamping pressure can be applied directly by a suitably shaped nut or through an intermediate part, such as a washer, a clamping plate or an anti-spread device.

Note 2 to entry: Examples of stud terminals are shown in Figure 2.

[SOURCE: IEC 60050-442:1998, 442-06-23]

3.5.4
saddle terminal
screw-type terminal in which the conductor is clamped under a saddle by means of two or more screws or nuts

Note 1 to entry: Examples of saddle terminals are shown in Figure 3.

[SOURCE: IEC 60050-442:1998, 442-06-09, modified — "screw-type" has been added.]

3.5.5
lug terminal
screw head terminal or stud terminal, designed for clamping a cable lug or bar by means of a screw or nut

Note 1 to entry: Examples of lug terminals are shown in Figure 4.

[SOURCE: IEC 60050-442:1998, 442-06-16, modified — "screw-type terminal" is replaced with "screw head terminal or stud terminal" and “directly and indirectly” has been deleted.]

3.5.6
mantle terminal
screw-type terminal in which the conductor is clamped against the base of a slot in a threaded stud by means of a nut

Note 1 to entry: The conductor is clamped against the base of the slot by a suitably shaped washer under the nut, by a central peg if the nut is a cap nut, or by equally effective means for transmitting the pressure from the nut to the conductor within the slot.

Note 2 to entry: Examples of mantle terminals are shown in Figure 5.

[SOURCE: IEC 60050-442:1998, 442-06-14, modified — “screw-type” has been added and the last part of the definition is included in a note.]

3.6
screwless-type terminal
terminal for the connection and subsequent disconnection of a rigid (solid or stranded) or flexible conductor or the interconnection of two conductors capable of being dismantled, the connection being made, directly or indirectly, by means of springs, parts of angled, eccentric or conical form, etc., without special preparation of the conductor concerned, other than removal of insulation

[SOURCE: IEC 60050-442:1998, 442-06-11 , modified]

International Electrotechnical Commission
Provided by IHS under license with IEC
No reproduction or networking permitted without license from IHS

3.7
thread-forming screw
screw having an uninterrupted thread which, by screwing in, forms a thread by displacing material in the cavity

Note 1 to entry: An example of a thread-forming screw is shown in Figure 6.

[SOURCE: IEC 60050-442:1998, 442-06-04]

3.8
thread-cutting screw
screw having an interrupted thread which, by screwing in, makes a thread by removing material from the cavity

Note 1 to entry: An example of a thread-cutting screw is shown in Figure 7.

[SOURCE: IEC 60050-442:1998, 442-06-03]

3.9
mechanical time-delay device
device which, through a mechanical auxiliary, operates some time after the instant at which the conditions which cause it to operate are established

3.10
base
part of the switch retaining current-carrying parts and which normally retains the mechanism in position

3.11
rated voltage
voltage assigned by the manufacturer for a specific operating condition of the switch

[SOURCE: IEC 60050-442:1998, 442-01-03, modified — "accessory" has been replaced with "switch".]

3.12
rated current
current assigned by the manufacturer for a specific operating condition of the switch

[SOURCE: IEC 60050-442:1998, 442-01-02, modified — "accessory" has been replaced with "switch".]

3.13
operating member
part of a cord-operated switch which connects the internal mechanism with a pull cord and is usually attached to the actuating member of the switch

3.14
pole of a switching device
portion of a switching device associated exclusively with one electrically separated conducting path of its main circuit and excluding those portions which provide a means for mounting and operating all poles together

Note 1 to entry: A switching device is called single-pole if it has only one pole. If it has more than one pole, it may be called multipole (two-pole, three-pole, etc.) provided the poles are or can be coupled in such a manner as to operate together.

[SOURCE: IEC 60050-441:2000, 441-15-01]

International Electrotechnical Commission
Provided by IHS under license with IEC
No reproduction or networking permitted without license from IHS

3.15
actuating member
part which is pulled, pushed, turned or otherwise moved to cause an operation of the switch

[SOURCE: IEC 60050-442:1998, 442-04-14]

3.16

pilot light
device incorporating a light source either integral or designed to be installed with the switch and intended to give for example an indication of the switch state or to indicate the switch location

3.17
main part
assembly consisting of the base and other parts which is not intended to be dismantled at any time after manufacture

3.18
grommet
component used to support and protect the wires or cable or conduit at the point of entry

Note 1 to entry: A grommet may also prevent the ingress of moisture or contaminants.

Note 2 to entry: Examples are shown in Figure 23.

[SOURCE: IEC 60050-581:2008, 581-27-19, modified — "part of a component or an accessory" has been replaced with "component", "or conduit" has been added and part of the definition is included in a note.]

3.19
entry membrane
component or integral part of the switch used to protect the wires or cable which may be used to support the cable or conduit at the point of entry

Note 1 to entry: An entry membrane may also prevent the ingress of moisture or contaminants and may be part of a grommet.

Note 2 to entry: Examples are shown in Figure 23.

3.20
protecting membrane
component or integral part of the switch that is not intended to be penetrated in normal use and is intended to provide protection against ingress of water or solid objects and/or to allow the operation of an accessory

Note 1 to entry: Examples are shown in Figure 23

3.21
self ballasted lamp
SBL
unit which cannot be dismantled without being permanently damaged, which is provided with a lamp cap or caps and which incorporates a light source and any additional elements necessary for starting and stable operation of the light source

Note 1 to entry: In the text, a self ballasted lamp is also called CFLi or LEDi, where:

- CFL stands for Compact Fluorescent Lamp;
- LED stands for Light Emitting Diode;
- “i” means that the control gear is incorporated in the lamp.

Note 2 to entry: This note applies to the French language only.

International Electrotechnical Commission
Provided by IHS under license with IEC
No reproduction or networking permitted without license from IHS

3.22
externally ballasted lamp
lamp other than an incandescent lamp which cannot be dismantled without being permanently damaged, which is provided with a lamp cap and which incorporates a light source to be controlled by a separate lamp control gear

Note 1 to entry: For lamp control gear, see definitions in IEC 61347-1.

4 General requirements

Switches and boxes of surface mounting accessories shall be so designed and constructed that, in normal use, their performance is reliable and safety is achieved by reducing risk to a tolerable level as defined in ISO/IEC Guide 51:2014.

Compliance is checked by meeting all the relevant requirements and tests specified.

5 General remarks on tests

Tests according to this document are type tests.

Unless otherwise specified, the specimens are tested as delivered and under normal conditions of use.

Switches having provision for pilot lights shall be tested with pilot lights fitted, unless otherwise stated. The results of the tests shall be considered to apply to switches of the same type which do not have provision for pilot lights.

Flush and semi-flush type switches shall be tested when installed in a box complying with the applicable standard sheet(s), if any. In case the switch is manufactured for a specific box, the tests shall be conducted when the switch is installed in the corresponding box as specified by the manufacturer.

Unless otherwise specified, the tests are carried out in the order of the clauses, at an ambient temperature between +15 °C and +35 °C.

In case of doubt, the tests are made at an ambient temperature of (+20 ± 5) °C.

For each of the two combinations of rated voltages and rated currents marked on the switch, three specimens are subjected to all the relevant tests except the test of 19.2 and 19.3, where two further sets of three specimens are used.

For switches with a rated current up to and including 16 A the tests of 19.1, 19.2 and 19.3 shall be carried out.

For switches with a rated current above 16 A and up to and including 20 A the tests of 19.1 and 19.3 shall be carried out.

For switches with a rated current above 16 A and up to 20 A inclusive the test of 19.2 shall be carried out only if the manufacturer has assigned the switch with an externally ballasted lamp current rating.

For switches with a rated current above 20 A, only the tests of 19.1 shall be carried out.

A switch marked 250 V/400 V is tested as a 400 V switch.

Momentary contact switches are not to be submitted to the tests of 18.3, 19.2 and 19.3.

International Electrotechnical Commission
Provided by IHS under license with IEC
No reproduction or networking permitted without license from IHS

Switches of pattern 3 and 03 are submitted to the tests of 18.3 if they have a rated voltage over 250 V, but are not to be submitted to the tests of 19.2 and 19.3.

The number of specimens required for the tests shall be as specified in Table 1.

Table 1 – Number of specimens needed for the tests

Clauses and subclauses		Number of specimens	Number of additional specimens for dual current rating
6	Ratings	A	
7	Classification	A	
8	Marking	A	
9	Checking of dimensions	ABC	
10	Protection against electric shock	ABC	
11	Provision for earthing	ABC	
12	Terminals [a,f,l]	ABC	JKL
13	Constructional requirements [b, m]	ABC	
14	Mechanism	ABC	
15	Resistance to ageing, protection provided by enclosures of switches, and resistance to humidity	ABC	
16	Insulation resistance and electric strength [c]	ABC	
17	Temperature rise	ABC	JKL
18	Making and breaking capacity	ABC [i]	JKL
19	Normal operation	ABC [i]	JKL
20	Mechanical strength [d,g]	ABC	
21	Resistance to heat [h]	ABC	
22	Screws, current-carrying parts and connections	ABC	
23	Creepage distances, clearances and distances through sealing compound	ABC	
19.2	Test for switches intended for externally ballasted lamp loads	DEF [j]	MNO
19.3	Test for switches intended for self ballasted lamp loads	UVW [k]	XYZ
24.1	Resistance to abnormal heat and to fire	GHI	
24.2	Resistance to tracking [e]	GHI	
25	Resistance to rusting	GHI	
	TOTAL	12	9

[a] Five extra screwless terminals are used for the test of 12.3.11 and one extra set of specimens is used for the test of 12.3.12.

[b] An extra set of membranes are needed for each of the tests of 13.15.1 and 13.15.2.

[c] One extra set of specimens of switches fitted with pilot light may be used for the tests of Clause 16.

[d] One extra set of specimens of cord-operated switches is needed for the test of 20.10.

[e] One extra set of specimens may be used.

[f] Two extra set of specimens of terminals suitable for rigid and flexible conductors are required for 12.2.5, 12.2.6 and 12.2.7.

[g] One extra set of specimens is needed for the tests of 20.5.1 and 20.5.2.

[h] One extra set of specimens may be used for the tests of 21.2 and 21.3. In this case the specimens shall be subjected first to the tests of 15.1.

[i] One extra set of specimens of switches of pattern number 7 are necessary for 18 and 19.1.

[j] One extra set of specimens of switches of pattern number 7 are necessary for 19.2.

[k] One extra set of specimens of switches of pattern number 7 are necessary for 19.3.

[l] Number of specimens required for insulation-piercing terminals (IPTs) are shown in Table D.1

[m] For switches with pilot light units if the electronic circuitry is so enclosed that the short-circuiting or disconnecting of components is impossible or difficult, the manufacturer shall provide additional prepared test specimens.

International Electrotechnical Commission
Provided by IHS under license with IEC
No reproduction or networking permitted without license from IHS

The specimens are submitted to all the relevant tests and comply with this document if all the requirements of all the relevant tests are met.

If one specimen does not satisfy a test due to an assembly or a manufacturing fault, that test and any preceding one which may have influenced the results of the test shall be repeated and also the tests which follow shall be made in the required sequence on another full set of specimens, all of which shall comply with the requirements.

The applicant may submit, together with a number of specimens specified in Table 1, the additional set of specimens which may be required, should one specimen fail. The test laboratory should then, without further request, test additional specimens and will reject them only if a further failure occurs. If the additional set of specimens is not submitted at the same time, the failure of one specimen will result in non compliance.

6 Ratings

6.1 Rated voltage

Preferred values of rated voltage are 130 V, 220 V, 230 V, 240 V, 250 V, 277 V, 380 V, 400 V, 415 V or 440 V.

If any other voltage rating is used, it shall not be less than that specified in IEC 60038:2009, Table 1.

6.2 Rated current

Preferred values of rated current are 6 A, 10 A, 13 A, 16 A, 20 A, 25 A, 32 A, 40 A, 45 A, 50 A or 63 A.

The rated current of switches shall not be less than 6 A, except for momentary contact switches where a rated current of 1 A, 2 A or 4 A is allowed.

Switches with a rated current not exceeding 16 A shall have an externally ballasted lamp current rating equal to the rated current. This requirement does not apply to switches of pattern numbers 3 and 03 or to momentary contact switches.

Switches with a rated current not exceeding 20 A shall be tested with self ballasted lamp (SBL) circuits as given in 19.3.

Switches which are tested according to 19.3 are capable of switching the rated power of SBL circuits according to Table 2.

NOTE Higher values of rated power of SBL circuits can be declared by the manufacturer according to Table 19.

International Electrotechnical Commission
Provided by IHS under license with IEC
No reproduction or networking permitted without license from IHS

Table 2 – Relationship between rated current of the switch and rated power of the SBL circuit

Rated current of the switch [A]	**Distribution system** [V]: **220/380** **230/400** **240/415** **Rated power of the SBL circuit** [W]	**Distribution system** [V]: **120/208** **120/240** **127/220** **Rated power of the SBL circuit** [W]
Up to and including 10	100	60
Above 10 up to and including 13	150	60
Above 13 up to and including 16	200	100
Above 16 up to and including 20	250	150

Compliance with the requirements of 6.1 and 6.2 is checked by inspection of the marking.

6.3 Preferred combinations of number of poles and ratings

Preferred combinations of number of poles and ratings are shown in Table 3.

Table 3 – Preferred combinations of numbers of poles and ratings

Rated current A	**Number of poles**	
	Rated voltage from 120 V to 250 V inclusive	**Rated voltage over 250 V**
1, 2 and 4	1	–
6	1 2	1 2
10 and 13	1 2	1 2 3 4
16, 20, 25, 32, 40, 45, 50 and 63	1 2 3 4	1 2 3 4

International Electrotechnical Commission
Provided by IHS under license with IEC
No reproduction or networking permitted without license from IHS

7 Classification

Switches are classified

7.1 according to the possible connections (see Figure 8):

	Pattern number
– single-pole switches	1
– double-pole switches	2
– three-pole switches	3
– three-pole plus switched neutral switches	03
– two-way switches	6
– two-circuit switches with a common incoming line	5
– two-way switches with one off-position	4
– two-way double-pole switches	6/2
– two-way reversing switches (or intermediate switches)	7

NOTE 1 Two or more switches having the same or different pattern numbers can be mounted on a common base.

NOTE 2 For the pattern number for which an off-position is considered, the above classification refers also to push-button switches and momentary contact switches.

7.2 according to the contact opening:

– switches of normal-gap construction;
– switches of mini-gap construction;
– switches of micro-gap construction;
– switches without contact gap (semiconductor switching devices).

7.3 according to the degree of protection against access to hazardous parts and against harmful effects due to the ingress of solid foreign objects as described in IEC 60529.

7.4 according to the degree of protection against harmful effects due to the ingress of water as described in IEC 60529.

7.5 according to the method of actuating the switch:

– rotary;
– tumbler;
– rocker;
– push-button;
– cord-operated.

7.6 according to the method of mounting the switch:

– surface-type;
– flush-type;
– semi flush-type;
– panel-type;
– architrave-type.

International Electrotechnical Commission
Provided by IHS under license with IEC
No reproduction or networking permitted without license from IHS

7.7 according to the method of installation, as a consequence of the design of the switch:

– switches where the cover or cover plate can be removed without displacement of the conductors (design A);

– switches where the cover or cover plate cannot be removed without displacement of the conductors (design B).

NOTE If a switch has a base which cannot be separated from the cover or cover plate, and requires a supplementary plate to meet the standard, which can be removed for redecorating the wall without displacement of the conductors, it is considered to be of design A, provided the supplementary plate meets the requirements specified for covers and cover plates.

7.8 according to the type of terminal:

– switches with screw-type terminals;

– switches with screwless-type terminals.

7.9 according to the suitability to accept conductors:

– switches with terminals for rigid conductors only;

– switches with terminals for rigid and flexible conductors.

NOTE 1 In the following country, switches with terminals for rigid conductors only are not allowed: ES, IN and IT.

NOTE 2 In the following countries, switches with screw terminals for rigid conductors only are not allowed: DE, DK, IN and ZA.

8 Marking

8.1 General

Switches shall be marked with

a) rated current(s)
   – in amperes (A) if the switch is tested according to 19.1 only
   – in amperes (A) if the switch is tested according to 19.1 and 19.3 only or
   – in amperes (AX) if the switch is tested according to 19.1, 19.2 and 19.3 when the rated currents in amperes (A) and (AX) are equal or
   – in amperes (A and AX) if the switch is tested according to 19.1, 19.2 and 19.3 when the rated currents in amperes (A) and (AX) are not equal;

b) rated voltage(s) in volts;

c) symbol for nature of supply;

d) manufacturer's or responsible vendor's name, trade mark or identification mark;

e) type reference, which may be a catalogue number;

f) symbol for switches of mini-gap construction, if applicable;

g) symbol for switches of micro-gap construction, if applicable;

h) symbol for switches without contact gap (semiconductor switching device), if applicable;

i) first characteristic numeral for the degree of protection against access to hazardous parts and against harmful effects due to ingress of solid foreign objects, if declared to be higher than 4 in which case the second characteristic numeral shall also be marked;

j) second characteristic numeral for the degree of protection against harmful effects due to ingress of water, if declared to be higher than 2 in which case the first characteristic numeral shall also be marked;

k) length of insulation to be removed before the insertion of the conductor into the screwless-type terminal;

l) symbol for the suitability to accept rigid conductors only.

International Electrotechnical Commission
Provided by IHS under license with IEC
No reproduction or networking permitted without license from IHS

In addition the following information shall be given in the manufacturer's documentation:

m) for SBL loads: the rated power in watts and the type of load if the switch is tested according to 19.3.

NOTE 1 Marking of the pattern number given in 7.1 can be made if the connections are not clear from an inspection of the switch; this pattern number may be part of the type reference.

NOTE 2 If a base carries two or more switches with separate operating devices, marking with the pattern numbers can be made, for example 1+6 or 1+1+1.

NOTE 3 If there is no marking on the terminals, they are suitable to accept both rigid and flexible conductors.

NOTE 4 In the following country, the marking of the type reference is not used: UK.

NOTE 5 In the following countries, the symbol that electrotechnical expertise is required (see IEC 60417-6182:2013-09) is to be placed on the packaging: DE.

8.2 Symbols

When symbols are used, they shall be as follows:

Amperes (Rated current for externally ballasted loads) ..... AX

(other currents) ..... A

Volts V

Alternating current ..... ~

Watt ..... W

Neutral ..... N

Line L

Protective earth (IEC 60417-5019:2006-08) ..... ⏚

"open" position (off) ..... O

"closed" position (on) I

Mini-gap construction ..... m

Micro-gap construction ..... μ

Without contact gap (semiconductor switching device) ..... ε

Degree of protection, when relevant ..... IPXX

Degree of protection for fixed accessories to be installed on rough surfaces

(test wall of Figure 21) ..... IPXX

Suitability to accept rigid conductors only ..... r

NOTE 1 Details of construction of certain symbols are given in IEC 60417.

NOTE 2 In the IP code the letter "X" is replaced by the relevant number.

NOTE 3 Lines formed by the construction of the tool are not considered as part of the marking.

The symbol "AX" may be replaced by the symbol "X". For the marking with rated current and rated voltage the figures may be used alone.

The marking for the nature of supply shall be placed next to the marking for rated current and rated voltage.

NOTE 4 The marking for current, voltage and nature of supply can be, for example, as follows:

International Electrotechnical Commission
Provided by IHS under license with IEC
No reproduction or networking permitted without license from IHS

10 AX 250 V ~	or	10 X/250 ~	or	$\frac{10\ X}{250}$ ~
20 A – 16 AX 250 V ~	or	20 -16 X/250 ~	or	$\frac{20 - 16\ X}{250}$ ~
10 AX 400 V ~	or	10 X/400 ~	or	$\frac{10\ X}{400}$ ~
25 AX 400 V ~	or	25 X/400 ~	or	$\frac{25\ X}{400}$ ~
25 A 250 V ~	or	25/250 ~	or	$\frac{25}{250}$ ~
25 AX 440 V ~	or	25 X/440 ~	or	$\frac{25\ X}{440}$ ~

8.3 Visibility of markings

Markings shall be clearly visible with normal or corrected vision, without additional magnification.

Markings as given in 8.1 a), b), c), d), e) and, if applicable, f), g), h), k), and l) shall be placed on the main part of the switch.

NOTE 1 Marking e) can be the series reference only.

NOTE 2 In the following country, the marking of the type reference is not used: UK.

Parts such as cover plates, which are necessary for safety purposes and are intended to be sold separately, shall be marked with the manufacturer's or responsible vendor's name, trade mark or identification mark and type reference.

Markings i) and j), when applicable, shall be marked so as to be easily discernible when the switch is mounted and wired as in normal use. These markings shall be placed on parts which cannot be removed without the use of a tool.

NOTE 3 Additional type references can be marked on the main part, or on the outside or the inside of the associated enclosure.

8.4 Marking on terminals for phase conductors

Terminals intended for the connection of phase conductors (supply conductors) shall be identified unless the method of connection is of no importance, is self-evident or is indicated on a wiring diagram. Such identification may take the form of a letter L or, in the case of more than one of such terminals, the letters L1, L2, L3, etc. The letters L1, L2, L3 may be accompanied by an arrow or arrows pointing to the relevant terminal or terminals.

These indications shall not be placed on screws or any other easily removable part.

Alternatively, the surface of such terminals shall be bare brass or copper, other terminals being covered with a metallic layer of another colour.

For switches of pattern numbers 2, 3, 03 and 6/2, terminals associated with any one pole shall have similar identification, if applicable, differing from that of the terminals associated with the other poles, unless the relationship is self-evident.

NOTE 1 The wiring diagram can be an instruction sheet which accompanies the switch.

International Electrotechnical Commission
Provided by IHS under license with IEC
No reproduction or networking permitted without license from IHS

NOTE 2 "Easily removable parts" are those parts which can be removed during the normal installation of the switch.

8.5 Marking on terminals for neutral and earth conductors

Terminals intended exclusively for the neutral conductor shall be indicated by the letter N.

Earthing terminal for the connection of the protective conductor shall be indicated by the symbol ⏚ (IEC 60417-5019:2006-08).

These markings shall not be placed on screws or any other easily removable part.

NOTE "Easily removable parts" are those parts which can be removed during the normal installation of the switch.

Terminals provided for the connection of conductors not forming part of the main function of the switch shall be clearly identified unless their purpose is self-evident, or indicated in a wiring diagram which shall be fixed to the accessory.

The identification of switch terminals may be achieved by

– their marking with graphical symbols according to IEC 60417 or colours and/or alpha-numeric system;
– their physical dimension or relative location.

Leads of pilot lights are not considered to be conductors for the purpose of 8.5.

8.6 Marking of the switch position

If switches are marked to indicate the switch position, they shall be so marked that the direction of movement of the actuating member to its different positions or the actual position is clearly indicated. For switches having more than one actuating member, this marking shall indicate, for each of the actuating members, the effect achieved by its operation.

The marking shall be clearly visible on the front of the switch when fitted with its cover or cover plate.

If this marking is placed on the cover, cover plate, or removable actuating members, it shall not be possible to fix them in a position such that the marking is incorrect.

The symbols for "on" and "off" shall not be used for the indication of the switch positions unless, at the same time, they clearly indicate the direction of the movement of the actuating members.

NOTE 1 Other suitable means for the indication of the switch position can be used, for example pilot lights.

The short straight line indicating the "on" position shall be radial for rotary switches, perpendicular to the axis of rotation of the dolly for tumbler switches and rocker switches and vertical for push-button switches when mounted vertically.

These requirements do not apply to cord-operated switches and to switches of pattern numbers 6, 6/2 and 7.

NOTE 2 This indication can be avoided for push-button switches.

Compliance with the requirements of 8.1 to 8.6 is checked by inspection.

International Electrotechnical Commission
Provided by IHS under license with IEC
No reproduction or networking permitted without license from IHS

8.7 Additional requirements for marking

If it is necessary to take special precautions when installing the switch, details of these shall be given in an instruction sheet which accompanies the switch.

Instruction sheets shall be written in the official language(s) of the country in which the switch is to be sold.

Compliance is checked by inspection.

NOTE 1 Special precautions can, for example, be necessary for unenclosed switches and for switches for panel mounting.

NOTE 2 After installation, the conditions necessary to meet the requirements of this document are achieved when the instruction sheet includes clear information with regard to the following:

– dimensions of the space to be provided for each switch;

– dimensions and position of the means for supporting and fixing the switch within this space;

– minimum clearance between the various parts of the switch and the surrounding parts where fitted;

– minimum dimensions of ventilating openings, if needed, and their correct arrangement.

NOTE 3 If necessary, information concerning the connection between the earthing terminal and accessible metal parts can be given.

8.8 Durability

Marking shall be durable and easily legible.

Compliance is checked by inspection and by the following test.

The marking is rubbed by hand for 15 s with a piece of cloth soaked with water and again for 15 s with a piece of cloth soaked with 95 % n-hexane.

NOTE 1 Marking made by impression, moulding, pressing, laser marking or engraving is not subjected to this test.

NOTE 2 95 % n-hexane (Chemical Abstracts Service Registry Number CAS RN 110-54-3) is available from a variety of chemical suppliers as a high pressure liquid chromatography (HPLC) solvent.

9 Checking of dimensions

Switches and boxes shall comply with the appropriate standard sheets, if any.

Compliance is checked by measurement.

10 Protection against electric shock

10.1 Prevention of access to live parts

Switches shall be so designed that when they are mounted and wired as in normal use, live parts are not accessible even after removal of parts which can be removed without the use of a tool.

Switches which are designed to be fitted with pilot lights supplied at voltages other than ELV shall have means to prevent direct contact with the lamp.

Compliance is checked by inspection and, if necessary, by the following test:

International Electrotechnical Commission
Provided by IHS under license with IEC
No reproduction or networking permitted without license from IHS

The specimen is mounted as in normal use and fitted with conductors of the smallest cross-sectional area specified in Clause 12; the test is repeated using conductors of the largest cross-sectional area specified in Clause 12.

Test probe B of IEC 61032 is applied in every possible position, an electrical indicator with a voltage between 40 V and 50 V being used to show contact with the relevant part.

Switches having enclosures or covers in thermoplastic or elastomeric material are subjected to the following additional test, which is carried out at an ambient temperature of (35 ± 2) °C, the switches being at this temperature.

During the additional test, the switches are subjected for 1 min to a force of 75 N, applied through the tip of test probe 11 of IEC 61032.

This finger, with an electrical indicator as described above, is applied to all places where yielding of insulating material could impair the safety of the switch, but is not applied to membranes or the like and is applied to thin-walled knock-outs with a force of only 10 N.

During this test, switches with their associated mounting means shall not deform to such an extent that live parts can be touched with the test probe 11 of IEC 61032.

NOTE Membranes or the like are tested according to 13.15.1 only.

10.2 Requirements for operating parts

Knobs, operating levers, push-buttons, rockers and the like shall be of insulating material, unless their accessible metal parts are separated from the metal parts of the mechanism by double insulation or reinforced insulation, or, as an alternative, they are reliably connected to earth.

Compliance is checked by inspection and by the tests of Clauses 16 and 23.

This requirement does not apply to removable keys or intermediate parts, such as chains or rods.

10.3 Requirements for accessible metal parts

10.3.1 Accessible parts of switches when in normal use shall be made of insulating material with the exception of the following:

– small screws and the like which are isolated from live parts and which are used for the fixing of the base and of covers, cover plates and other parts of the enclosure;
– actuating members complying with 10.2;
– the covers, cover plates and other parts of the enclosure made of metal which comply with the requirements of 10.3.2 or 10.3.3.

10.3.2 Covers or cover plates of metal shall be protected by additional insulation made by insulating linings or insulating barriers. The insulating linings or insulating barriers shall either

– be fixed to covers or cover plates or the body of the switches in such a way that they cannot be removed without being permanently damaged, or
– be so designed that
  - they cannot be replaced in an incorrect position;
  - if they are omitted, the accessories are rendered inoperable or manifestly incomplete;
  - there is no risk of accidental contact between live parts and metal covers or cover plates, for example through their fixing screws, even if a conductor should come away from its terminal;

International Electrotechnical Commission
Provided by IHS under license with IEC
No reproduction or networking permitted without license from IHS

- precautions are taken in order to prevent creepage distances or clearances becoming less than the values specified in Clause 23.

Compliance is checked by inspection.

The above linings or barrier shall comply with the tests of Clauses 16 and 23.

NOTE Insulating coating sprayed on the inside or on the outside of the metal cover or cover plate is not deemed to be an insulating lining or barrier for the purpose of 10.3.2.

10.3.3 The earthing of metal covers or cover plates can be made with fixing screws or other integral means, the resulting connection shall be of low resistance.

Compliance is checked by inspection and by the tests of 11.4.

10.4 Requirements for insulation of the mechanism

Metal parts of the mechanism, such as the spindle or the pivot of the dolly or rocker, that are not insulated from live parts, shall not protrude from the enclosure.

However, for switches operated by means of a removable key or similar device, such metal parts of the mechanism shall be insulated from live parts.

Compliance is checked by inspection and, if necessary, after the actuating member has been removed or broken.

If the actuating member has to be broken, compliance is checked by the test of Clause 23.

10.5 Requirements for insulation of the mechanism with respect to the surrounding environment

Metal parts of the mechanism shall not be accessible and shall be insulated from accessible metal parts when the switch is fixed as in normal use.

These requirements do not apply if the metal parts of the mechanism are separated from live parts in such a way that the creepage distances and clearances have at least twice the values specified in Clause 23, or, as an alternative, if they are reliably connected to earth.

Compliance is checked by inspection and, if necessary, by measurement and by the tests of Clauses 10 and 16.

NOTE When checking the inaccessibility of metal parts of the mechanism of unenclosed switches or architrave-type switches, the protection provided by the normal way of mounting the switch is taken into account.

For unenclosed stack-type switches having a metal spindle pivoting in a metal base plate, the additional requirement means that the creepage distances and clearances between live parts and the spindle, and between metal parts of the mechanism and base plate, shall have at least twice the values specified in Clause 23.

10.6 Requirements for switches operated indirectly

Switches operated by means of a removable key or by means of an intermediate part, such as a cord, a chain or a rod, shall be so designed that the key or intermediate part can only touch parts which are insulated from live parts.

The key or intermediate part shall be insulated from metal parts of the mechanism, unless the creepage distances and clearances between live parts and metal parts of the mechanism have at least twice the values specified in Clause 23.

International Electrotechnical Commission
Provided by IHS under license with IEC
No reproduction or networking permitted without license from IHS

Compliance is checked by inspection, by the test of 16.3 and, if necessary, by measurement.

NOTE Lacquer or enamel is not considered to be insulating material for the purposes of 10.1 to 10.6.

10.7 Requirements for switches with replaceable pull cord

Where cord-operated switches are provided with a pull cord which can be fitted or replaced by the user, they shall be so designed that it is impossible to touch live parts when fitting or replacing the pull cord in the normal way.

Compliance is checked by inspection.

11 Provision for earthing

11.1 General

Accessible metal parts, which can become live in the event of an insulation fault, shall be provided with, or permanently and reliably connected to, an earthing terminal.

This requirement does not apply to the metal cover plates mentioned in 10.3.2.

For the purpose of this requirement, small screws and the like, isolated from live parts, are not considered as accessible parts which can become live in the event of an insulation fault.

11.2 Earthing terminals

Earthing terminals shall be terminals with screw clamping or screwless terminals and shall comply with the appropriate requirements of Clause 12.

11.3 Requirements for surface-type switches

Surface-type switches with an enclosure of insulating material, having an IP code higher than IPX0 and more than one cable inlet, shall be provided with either an internal fixed earthing terminal or adequate space for a floating terminal allowing the connection of an incoming and outgoing conductor for the continuity of the earthing circuit.

Clause 12 does not apply to floating terminals which shall comply with IEC 60998-1 and the relevant sub-part of IEC 60998-2.

Compliance with 11.1 to 11.3 is checked by inspection and by the tests of Clause 12.

Compliance for adequate space for floating terminals is checked by performing a test connection using the type of terminal specified by the manufacturer.

11.4 Test for earthing connection

The connection between the earthing terminal and accessible metal parts to be connected thereto shall be of low resistance.

Compliance is checked by the following test:

A current derived from an AC source having a no-load voltage not exceeding 12 V and equal to 1,5 times the rated current or 25 A, whichever is the greater, is passed between the earthing terminal and each of the accessible metal parts in turn.

The voltage drop between the earthing terminal and the accessible metal part is measured, and the resistance calculated from the current and this voltage drop.

International Electrotechnical Commission
Provided by IHS under license with IEC
No reproduction or networking permitted without license from IHS

In no case shall the resistance exceed 0,05 Ω.

NOTE Care is taken that the contact resistance between the tip of the measuring probe and the metal part under test does not influence the test results.

12 Terminals

12.1 General

Switches shall be provided with terminals having screw clamping or with screwless terminals.

The means for clamping the conductors in the terminals shall not serve to fix any other component, although they may hold the terminals in place or prevent them from turning.

All the tests on terminals, with the exception of 12.3.11, shall be carried out after the test of 15.1. Rigid solid conductors shall be of Class 1, rigid stranded conductors shall be of Class 2 and flexible conductors shall be of Class 5 according to IEC 60228.

Compliance is checked by inspection and by the tests of 12.2 or 12.3, as applicable.

12.2 Terminals with screw clamping for external copper conductors

12.2.1 Terminals with screw clamping may be of the type suitable for rigid copper conductors only or of the type suitable for both rigid and flexible copper conductors having cross-sectional areas as shown in Table 4.

Table 4 – Relationship between rated currents and connectable cross-sectional areas of copper conductors

Ranges of rated currents	Rigid conductors (solid or stranded)[c]	
	Nominal cross-sectional areas	Diameter of largest conductor
A	mm^2	mm
up to and including 4[a]	–	–
above 4 up to and including 6	From 0,75 up to 1,5 inclusive	1,45
above 6 up to and including 13[b]	From 1 up to 2,5 inclusive	2,13
above 13 up to and including 16[b]	From 1,5 up to 4 inclusive	2,72
above 16 up to and including 25	From 2,5 up to 6 inclusive	3,34
above 25 up to and including 32	From 4 up to 10 inclusive	4,34
above 32 up to and including 50	From 6 up to 16 inclusive	5,46
above 50 up to and including 63	From 10 up to 25 inclusive	6,85

[a] For special purposes such as ELV applications, where flexible conductors are used (from 0,5 mm^2 up to 1 mm^2 inclusive).

[b] Each supply terminal of switches, other than those of pattern numbers 3, 03 and 7, shall allow the connection of two 2,5 mm^2 conductors. For switches having a rated voltage not exceeding 250 V a round hole is sufficient for the connection of two 2,5 mm^2 conductors.

[c] The use of flexible conductors is permitted.

The conductor space shall be at least that specified in Figures 1, 2, 3, 4 and 5.

Compliance is checked by inspection and by fitting conductors of the smallest and largest cross-sectional areas specified.

International Electrotechnical Commission
Provided by IHS under license with IEC
No reproduction or networking permitted without license from IHS

12.2.2 Terminals with screw clamping shall allow the conductor to be connected without special preparation.

Compliance is checked by inspection.

NOTE The term "special preparation" covers soldering of the wires of the conductor, use of cable lugs, formation of eyelets, etc., but not the reshaping of the conductor before its introduction into the terminal or the twisting of a flexible conductor to consolidate the end.

12.2.3 Terminals with screw clamping shall have adequate mechanical strength.

Screws and nuts for clamping the conductors shall have a metric ISO thread or a thread comparable in pitch and mechanical strength.

Screws shall not be of metal which is soft or liable to creep, such as zinc or aluminium.

Compliance is checked by inspection and by the tests of 12.2.6 and 12.2.8.

NOTE Provisionally SI, BA, and UN threads are considered to be comparable in pitch and mechanical strength to metric ISO thread.

12.2.4 Terminals with screw clamping shall be resistant to corrosion.

Terminals, the body of which is made of copper or copper alloy as specified in 22.5 are considered as complying with this requirement.

12.2.5 Terminals with screw clamping shall be so designed and constructed that they clamp the conductor(s) without undue damage to the conductor(s).

Compliance is checked by the following test:

Terminals suitable for rigid conductors only are checked with rigid solid conductors and on a new set of specimens with rigid stranded conductors, if existing.

NOTE "if existing" means that the conductor is available in the market where the product is sold and installed.

Terminals suitable for rigid and flexible conductors are checked with rigid conductors as above and on a new set of samples with flexible conductors.

The terminal is placed in the test apparatus according to Figure 9. The terminal is fitted first with a conductor of the smallest and then with a conductor of the largest cross-sectional area according to Table 4, the clamping screw(s) or nut(s) being tightened with the torque according to Table 5.

Where a screw has a hexagonal head with a slot for tightening with a screwdriver and the values of columns 3 and 5 are different, the test is made twice, first applying to the hexagonal head the torque specified in column 5 and then applying the torque specified in column 3 by means of a screwdriver. If the values of columns 3 and 5 are the same, only the test with the screwdriver is made.

For mantle terminals, the specified nominal diameter is that of the slotted stud.

The shape of the blade of the test screwdriver shall suit the head of the screw to be tested.

The screws and nuts shall be tightened in one smooth and continuous motion.

International Electrotechnical Commission
Provided by IHS under license with IEC
No reproduction or networking permitted without license from IHS

Table 5 – Tightening torque for the verification of the mechanical strength of screw-type terminals

Nominal diameter of thread mm	Torque Nm					
	1	2	3	4	5	6
Up to and including 2,8	0,2	–	0,4	–	0,4	–
Over 2,8 up to and including 3,0	0,25	–	0,5	–	0,5	–
Over 3,0 up to and including 3,2	0,3	–	0,6	–	0,6	–
Over 3,2 up to and including 3,6	0,4	–	0,8	–	0,8	–
Over 3,6 up to and including 4,1	0,7	1,2	1,2	1,2	1,2	–
Over 4,1 up to and including 4,7	0,8	1,2	1,8	1,8	1,8	–
Over 4,7 up to and including 5,3	0,8	1,4	2,0	2,0	2,0	–
Over 5,3 up to and including 6,0	–	1,8	2,5	3,0	3,0	–
Over 6	–	–	–	–	–	0,8

Column 1 applies to screws without heads if the screw when tightened does not protrude from the hole, and to other screws which cannot be tightened by means of a screwdriver with a blade wider than the diameter of the screw.

Column 2 applies to nuts of mantle terminals which are tightened by means of a screwdriver.

Column 3 applies to other screws which are tightened by means of a screwdriver.

Column 4 applies to nuts of mantle terminals in which the nut is tightened by means other than a screwdriver.

Column 5 applies to screws or nuts, other than nuts of mantle terminals, which are tightened by means other than a screwdriver.

Column 6 applies to nuts of switches with central hole fixing.

The length of the test conductor shall be 75 mm longer than the height (H) specified in Table 6.

The end of the conductor is passed through an appropriate sized bushing in a platen positioned at a height (H) below the equipment as given in Table 6. The bushing shall be positioned in a horizontal plane such that its centre line describes a circle of 75 mm diameter, concentric with the centre of the clamping unit in the horizontal plane. The platen is then rotated at a rate of (10 ± 2) r/min.

The distance between the mouth of the clamping unit and the upper surface of the bushing shall be within ± 15 mm of the height of Table 6. The bushing may be lubricated to prevent binding, twisting, or rotation of the insulated conductor.

A mass as specified in Table 6 is to be suspended from the end of the conductor. The duration of the test shall be 15 min.

During the test, the rigid conductor, or any wire of rigid stranded or flexible conductor, shall neither slip out of the clamping unit nor break near the clamping unit, nor shall the conductor be damaged in such a way as to render it unfit for further use.

In the case of the flexible conductor, the breakage of a few wires shall not be taken into account provided it does not exceed 15 % of the original number of wires.

International Electrotechnical Commission
Provided by IHS under license with IEC
No reproduction or networking permitted without license from IHS

Table 6 – Test values for flexion and pull out for copper conductors

Conductor cross-sectional area [a] mm^2	Diameter of bushing hole [b] mm	Height *H* [c] mm	Mass for conductor kg
0,5	6,5	260	0,3
0,75	6,5	260	0,4
1,0	6,5	260	0,4
1,5	6,5	260	0,4
2,5	9,5	280	0,7
4,0	9,5	280	0,9
6,0	9,5	280	1,4
10,0	9,5	280	2,0
16,0	13,0	300	2,9
25,0	13,0	300	4,5

[a] AWG sizes corresponding to mm^2 can be found in IEC 60999-1.

[b] If the bushing hole diameter is not large enough to accommodate the conductor without binding, a bushing having the next larger hole size may be used.

[c] Tolerance for height *H* = ± 15 mm.

12.2.6 Terminals with screw clamping shall be so designed that they clamp the conductor reliably between metal surfaces.

Compliance is checked by inspection and by the following test:

Terminals suitable for rigid conductors only are checked with rigid solid conductors and on a new set of specimens with rigid stranded conductors, if existing.

NOTE 1 "if existing" means that the conductor is available in the market where the product is sold and installed.

Terminals suitable for rigid and flexible conductors are checked with rigid conductors as above and on a new set of specimens with flexible conductors.

The terminals are fitted first with conductors of the smallest and then with conductors of the largest cross-sectional area specified in Table 4, the terminal screws being tightened with a torque equal to two-thirds of the torque shown in the appropriate column of Table 5.

If the screw has a hexagonal head with a slot, the torque applied is equal to two-thirds of the torque shown in column 3 of Table 5.

The conductor is then subjected to a pull as specified in Table 7, applied without jerks, for 1 min, in the direction of the axis of the conductor space.

If the clamp is intended for two conductors, the appropriate pull is applied consecutively to each conductor.

International Electrotechnical Commission
Provided by IHS under license with IEC
No reproduction or networking permitted without license from IHS

Table 7 – Test values for pulling out test

Cross-section of conductors connected to the terminal mm²	**0,75**	**1**	**1,5**	**2,5**	**4**	**6**	**10**	**16**	**25**
Pull N	30	35	40	50	50	60	80	90	100

During the test, the conductor shall not move noticeably in the terminal.

If the clamp is intended for connection of more than two conductors, reference is made for the testing to the requirements given in the appropriate part of IEC 60998.

NOTE 2 In the following countries, terminals allowing connection of two conductors are additionally tested with one rigid solid conductor and one rigid stranded conductor with the same cross-sectional area connected at the same time: DK, FI, NO, SE and ZA.

12.2.7 Terminals with screw clamping shall be so designed or placed that neither a rigid solid conductor nor a wire of a stranded conductor can slip out while the clamping screws or nuts are tightened.

This requirement does not apply to lug terminals.

Compliance is checked by the following test:

Terminals suitable for rigid conductors only are checked with rigid solid conductors and on a new set of specimens with rigid stranded conductors, if existing.

NOTE "if existing" means that the conductor is available in the market where the product is sold and installed.

Terminals suitable for rigid and flexible conductors are checked with rigid conductors as above and on a new set of specimens with flexible conductors.

The terminals are fitted with conductors having the largest cross-sectional area specified in Table 4.

Terminals intended for the looping-in of two or three conductors are checked, fitted with the permissible number of conductors.

The terminals are fitted with conductors having the composition given in IEC 60228.

Before insertion into the clamping means of the terminal, wires of rigid (solid or stranded) conductors are straightened; rigid stranded conductors may, in addition, be twisted to restore them approximately to their original shape and flexible conductors are twisted in one direction so that there is a uniform twist of one complete turn in a length of approximately 20 mm.

The conductor is inserted into the clamping means of the terminal for the minimum distance prescribed or, where no distance is prescribed, until it just projects from the far side of the terminal and in the position most likely to allow the wire to escape.

The clamping screw(s) or nut(s) is (are) then tightened with a torque equal to two-thirds of the torque shown in the appropriate column of Table 5.

After the test, no wire of the conductors shall have escaped outside the clamping unit thus reducing creepage distances and clearances to values lower than those indicated in Table 23.

International Electrotechnical Commission
Provided by IHS under license with IEC
No reproduction or networking permitted without license from IHS

12.2.8 Terminals with screw clamping shall be so fixed or located within the switch that, when the clamping screws or nuts are tightened or loosened, the terminals shall not work loose from their fixing to the switch.

Movement of the terminal is allowed as long as it is sufficiently limited so as to prevent non-compliance with this document.

The use of sealing compound or resin is considered to be sufficient for preventing a terminal from working loose, provided that

– the sealing compound or resin is not subject to stress during normal use, and
– the effectiveness of the sealing compound or resin is not impaired by temperatures attained by the terminal under the most unfavourable conditions specified in this document.

Compliance is checked by inspection, by measurement and by the following test:

A solid rigid copper conductor of the largest cross-sectional area specified in Table 4 is placed in the terminal.

Screws and nuts are tightened and loosened five times by means of a suitable test screwdriver or spanner, the torque applied when tightening being equal to the torque shown in the appropriate column of Table 5 or in the table of the appropriate Figures 1 to 4, whichever is the highest.

The conductor is moved each time the screw or nut is loosened.

During the test, terminals shall not work loose and there shall be no damage, such as breakage of screws or damage to the heads, slots, threads, washers or stirrups that will impair the further use of the terminals.

12.2.9 Clamping screws or nuts of earthing terminals with screw clamping shall be adequately locked against accidental loosening and it shall not be possible to loosen them without the aid of a tool.

Compliance is checked by manual test.

In general, the designs of terminals shown in Figures 1, 2, 3, 4 and 5 provide sufficient resiliency to comply with this requirement; for other designs, special provisions, such as the use of an adequately resilient part which is not likely to be removed inadvertently, may be necessary.

12.2.10 Earthing terminals with screw clamping shall be such that there is no risk of corrosion resulting from contact between these parts and the copper of the earthing conductor, or any other metal that is in contact with these parts.

The body of the earthing terminals shall be of brass or other metal no less resistant to corrosion, unless it is a part of the metal frame or enclosure, when the screw or nut shall be of brass or other metal no less resistant to corrosion.

If the body of the earthing terminal is a part of a frame or enclosure of aluminium alloy, precautions shall be taken to avoid the risk of corrosion resulting from contact between copper and aluminium or its alloys.

Compliance is checked by inspection.

NOTE Screws or nuts of plated steel withstanding the corrosion test are considered to be of a metal no less resistant to corrosion than brass.

International Electrotechnical Commission
Provided by IHS under license with IEC
No reproduction or networking permitted without license from IHS

12.2.11 For pillar terminals, the distance between the clamping screw and the end of the conductor, when fully inserted, shall be at least that specified in Figure 1.

NOTE The minimum distance between the clamping screw and the end of the conductor applies only to pillar terminals in which the conductor cannot pass right through.

For mantle terminals, the distance between the fixed part and the end of the conductor, when fully inserted, shall be at least that specified in Figure 5.

Compliance is checked by measurement, after a solid conductor of the largest cross-sectional area specified for the appropriate rated current in Table 4 has been fully inserted and fully clamped.

12.2.12 Lug terminals shall be used only for switches having a rated current of 40 A or greater; if such terminals are provided, they shall be fitted with spring washers or equally effective locking means.

Compliance is checked by inspection.

12.3 Screwless terminals for external copper conductors

12.3.1 Screwless terminals may be of the type suitable for rigid copper conductors only or of the type suitable for both rigid and flexible copper conductors.

For the latter type, the tests are carried out with rigid conductors first and then repeated with flexible conductors.

12.3 is not applicable to switches provided with

- screwless terminals requiring the fixing of special devices to the conductors before clamping in the screwless terminal, for example flat push-on connectors;
- screwless terminals requiring twisting of the conductors, for example those with twisted joints;
- screwless terminals providing direct contact to the conductors by means of edges or points penetrating the insulation.

12.3.2 Screwless terminals shall be provided with clamping units which allow the proper connection of rigid or of rigid and flexible copper conductors having nominal cross-sectional areas as shown in Table 8.

Table 8 – Relationship between rated currents and connectable cross-sectional areas of copper conductors for screwless terminals

Rated current	Conductors		
	Nominal cross-sectional areas	Diameter of largest rigid conductor	Diameter of largest flexible conductor
A	mm^2	mm	mm
Up to and including 4	0,75 to 1	1,19	-
Above 4 and including 6	1 to 1,5	1,45	1,73
Above 6 and including 16[a]	1,5 to 2,5	2,13	2,21

[a] Each supply terminal of switches other than those of pattern numbers 3, 03 and 7 shall allow the connection of two 2,5 mm^2 conductors. In such cases a terminal with separate independent clamping means for each conductor shall be used.

Compliance is checked by inspection and by fitting conductors of the smallest and largest cross-sectional areas specified.

International Electrotechnical Commission
Provided by IHS under license with IEC
No reproduction or networking permitted without license from IHS

12.3.3 Screwless terminals shall allow the conductor to be connected without special preparation.

Compliance is checked by inspection.

NOTE The term "special preparation" covers soldering of the wires of the conductor, use of terminal ends, etc., but not the reshaping of the conductor before introduction into the terminal or the twisting of a flexible conductor to consolidate the end.

12.3.4 Parts of screwless terminals mainly intended for carrying current shall be of materials as specified in 22.5.

Compliance is checked by inspection and by chemical analysis.

NOTE Springs, resilient units, clamping plates and the like are not considered as parts mainly intended for carrying current.

12.3.5 Screwless terminals shall be so designed that they clamp the specified conductors with sufficient contact pressure and without undue damage to the conductor.

The conductor shall be clamped between metal surfaces.

Compliance is checked by inspection and by the test of 12.3.10.

12.3.6 It shall be clear how the connection and disconnection of the conductors is to be made.

The disconnection of a conductor shall require an operation, other than a pull on the conductor, so that it can be made manually with or without the assistance of a general purpose tool.

It shall not be possible to confuse the opening for the use of a tool to assist the connection or disconnection with the opening intended for the insertion of the conductor.

Compliance is checked by inspection and by the test of 12.3.10.

12.3.7 Screwless terminals which are intended to be used for the interconnection of two or more conductors shall be so designed that

- the clamping of one of the conductors is independent of the clamping of the other conductor(s);
- during the connection or disconnection the conductors can be connected or disconnected either at the same time or separately;
- each conductor shall be introduced in a separate clamping unit (not necessarily in separate holes);
- it shall be possible to clamp securely any number of conductors up to the maximum as designed.

Compliance is checked by inspection and by the tests with the appropriate conductors.

12.3.8 Screwless terminals shall be so designed that over-insertion of the conductor is prevented and adequate insertion is obvious.

Screwless terminals of switches shall be so designed that undue insertion of the conductor is prevented by a stop if further insertion is liable to reduce the creepage distances and/or clearances required in Table 23, or to influence the mechanism of the switch.

Compliance is checked by inspection and by the test of 12.3.10.

International Electrotechnical Commission
Provided by IHS under license with IEC
No reproduction or networking permitted without license from IHS

12.3.9 Screwless terminals shall be properly fixed to the switch.

They shall not work loose when the conductors are connected or disconnected during installation.

Compliance is checked by inspection and by the test of 12.3.10.

Covering with sealing compound without other means of locking is not sufficient. However, self-hardening resins may be used to fix terminals which are not subject to mechanical stress in normal use.

12.3.10 Screwless terminals shall withstand the mechanical stresses occurring in normal use.

Compliance is checked by the following tests which are carried out with uninsulated conductors on one screwless terminal of each specimen, using a new specimen for each test.

The test is carried out with solid copper conductors, first with conductors having the largest cross-sectional area, and then with conductors having the smallest cross-sectional area specified in 12.3.2.

Conductors are connected and disconnected five times, new conductors being used each time, except for the fifth time, when the conductors used for the fourth connection are clamped at the same place. For each connection the conductors are either pushed as far as possible into the terminal or are inserted so that adequate connection is obvious.

After each connection, the conductor is subjected to a pull of 30 N; the pull is applied without jerks, for 1 min, in the direction of the longitudinal axis of the conductor space.

During the application of the pull, the conductor shall not come out of the screwless terminal.

The test is then repeated with rigid stranded copper conductors having the largest and smallest cross-sectional areas specified in 12.3.2; these conductors are, however, connected and disconnected only once.

Screwless terminals, intended for both rigid and flexible conductors, shall also be tested with flexible conductors, applying five connections and disconnections.

Each conductor of screwless terminals is subjected for 15 min to a circular motion with (10 ± 2) r/min using an apparatus, an example of which is shown in Figure 9. The conductor is subjected to a pull having a value shown in Table 6.

During the test, the conductors shall not move noticeably in the clamping unit.

After these tests, neither the terminals nor the clamping means shall have worked loose and the conductors shall show no deterioration impairing their further use.

12.3.11 Screwless terminals shall withstand the electrical and thermal stresses occurring in normal use.

Compliance is checked by the following tests a) and b), which are carried out on five screwless terminals which have not been used for any other test.

Both tests are carried out with new copper conductors.

a) The test is carried out by loading the screwless terminals for 1 h with an alternating current as specified in Table 9 and connecting rigid solid conductors 1 m long having the cross-sectional area as specified in Table 9.

International Electrotechnical Commission
Provided by IHS under license with IEC
No reproduction or networking permitted without license from IHS

b) The test is carried out on each clamping unit.

Table 9 – Test current for the verification of electrical and thermal stresses in normal use of screwless terminals

Rated current A	Test current A	Cross-sectional area of the conductor mm^2
Up to including 4	9	0,75
Above 4 and including 6	13,5	1
Above 6 and including 13	17,5	1,5
Above 13 and including 16	22	2,5

During the test, the current is not passed through the switch but only through the terminals.

Immediately after this period, the voltage drop across each screwless terminal is measured with rated current flowing.

In no case shall the voltage drop exceed 15 mV.

The measurements are made across each screwless terminal and as near as possible to the place of contact.

If the back connection of the terminal is not accessible, the second connecting point in the case of two-way switches may be used for the returning wire; in the case of one-way switches the specimens may be adequately prepared by the manufacturer; care should be taken not to affect the behaviour of the terminal.

During the period of the test, including the measurements, the conductors and the measurement means shall not be moved so that the result of the test is affected.

The screwless terminals already subjected to the determination of the voltage drop specified in the previous test a) are tested as follows:

– *During the test, a current equal to the test current value given in Table 9 is passed.*

The whole test arrangement including the conductors shall not be moved until the measurements of the voltage drop have been completed.

The terminals are subjected to 192 temperature cycles, each cycle having a duration of approximately 1 h and being carried out as follows:

– *the current is flowing for approximately 30 min;*
– *for a further approximately 30 min no current is flowing.*

The voltage drop in each screwless terminal is determined as prescribed for the test of a) and is done at the following moments:

– *after the first 24 temperature cycles and after the 192 temperature cycles;*
– *additional measurements to be done after any three of the following temperature cycles: after the 48th, 72nd, 96th, 120th, 144th or 168th temperature cycles.*

In no case shall the voltage drop exceed 22,5 mV or two times the value measured after the 24th cycle, whichever is the smaller.

International Electrotechnical Commission
Provided by IHS under license with IEC
No reproduction or networking permitted without license from IHS

After this test, an inspection by normal or corrected vision without additional magnification shall show no changes evidently impairing further use such as cracks, deformation or the like.

In addition, the mechanical strength test according to 12.3.10 is repeated and all specimens shall withstand this test.

12.3.12 Screwless terminals shall be so designed that the connected rigid solid conductor remains clamped, even when it has been deflected during normal installation, for example during mounting in a box, and the deflecting stress is transferred to the clamping unit.

Compliance is checked by the following test which is made on three specimens of switches which have not been used for any other test.

The test apparatus, the principle of which is shown in Figure 10a, shall be so constructed that

- *a specified conductor properly inserted into a terminal is allowed to be deflected in any of the 12 directions differing from each other by 30°, with a tolerance referred to each direction of ±5°, and*
- *the starting point can be varied by 10° and 20° from the original point.*

A reference point need not be specified.

The deflection of the conductor from its straight position to the testing positions shall be effected by means of a suitable device applying a specified force to the conductor at a certain distance from the terminal.

The deflecting device shall be so designed that

- *the force is applied in the direction perpendicular to the undeflected conductor;*
- *the deflection is attained without rotation or displacement of the conductor within the clamping unit, and*
- *the force remains applied while the prescribed voltage drop measurement is made.*

Provision shall be made so that the voltage drop across the clamping unit under test can be measured when the conductor is connected, as shown for example in Figure 10b.

The specimen is mounted on the fixed part of the test apparatus in such a way that the specified conductor inserted into the clamping unit under test can be freely deflected.

To avoid oxidation, the insulation of the wire shall be removed immediately before starting the test.

NOTE 1 If necessary, the inserted conductor can be permanently bent around obstacles, so that these do not influence the results of the test.

NOTE 2 In some cases, with the exception of the case of guidance for the conductor, it may be advisable to remove those parts of the specimens which do not allow the deflection of the conductor corresponding to the force to be applied.

A clamping unit is fitted as for normal use with a rigid solid copper conductor having the smallest cross-sectional area specified in Table 10 and is submitted to a first test sequence. The same clamping unit is submitted to a second test sequence using the conductor having the largest cross-sectional area, unless the first test sequence has failed.

The force for deflecting the conductor is specified in Table 11, the distance of 100 mm being measured from the extremity of the terminal, including the guidance, if any, for the conductor, to the point of application of the force to the conductor.

International Electrotechnical Commission
Provided by IHS under license with IEC
No reproduction or networking permitted without license from IHS

The test is made with continuous current (i.e. the current is not switched on and off during the test). A suitable power supply should be used and an appropriate resistance should be inserted in the circuit so that the current variations are kept within ±5 % during the test.

Table 10 – Cross-sectional areas of rigid copper conductors for deflection test of screwless terminals

Rated current of the switch A	Cross-sectional area of the test conductor mm^2	
	1st test sequence	2nd test sequence
≤ 6	1,0[a]	1,5
Above 6 up to and including 16	1,5	2,5
[a] Only for countries allowing the use of 1,0 mm^2 conductors in fixed installations.		

Table 11 – Deflection test forces

Cross-sectional area of the test conductor mm^2	Force for deflecting the test conductor[a] N
1,0	0,25
1,5	0,5
2,5	1,0
[a] The forces are chosen so that they stress the conductors close to the limit of elasticity.	

A test current equal to the rated current of the switch is passed through the clamping unit under test. A force according to Table 11 is applied to the test conductor inserted in the clamping unit under test in one of the 12 directions shown in Figure 10a and the voltage drop across this clamping unit is measured. The force is then removed.

The force is then applied successively in each one of the remaining 11 directions shown in Figure 10a following the same test procedure.

If for any of the 12 test directions the voltage drop is greater than 25 mV, the force is maintained in this direction until the voltage drop is reduced to a value below 25 mV, but for not more than 1 min. After the voltage drop has reached a value below 25 mV, the force is maintained in the same direction for a further period of 30 s, during which period the voltage drop shall not have increased.

The other two specimens of switches of the set are tested following the same test procedure, but moving the 12 directions of the force so that they differ by approximately 10° for each specimen. If one specimen has failed at one of the directions of application of the test force, the tests are repeated on another set of specimens, all of which shall comply with the repeated tests.

13 Constructional requirements

13.1 Mechanical requirements for insulating means

Insulating linings, barriers and the like shall have adequate mechanical strength and shall be secured in a reliable manner.

Compliance is checked by inspection after the tests of Clause 20.

International Electrotechnical Commission
Provided by IHS under license with IEC
No reproduction or networking permitted without license from IHS

13.2 Installation requirements

Switches shall be constructed so as to permit

– easy introduction into the terminal and reliable connection of the conductors in the terminals, except for lead wires of pilot lights;

NOTE 1 Screw terminals shown in Figures 1 to 5 are considered suitable for reliable connection of the conductors.

– correct positioning of the conductors;

– easy fixing of the switch to a wall or in a box;

– adequate space between the underside of the main part and the surface on which the main part is mounted or between the sides of the main part and the enclosure (cover or box) so that, after installation of the switch, the insulation of the conductors is not necessarily pressed against live parts of different polarity or against moving parts of the mechanism, such as the spindle of a rotary switch.

NOTE 2 This requirement does not imply that the metal parts of the terminals are necessarily protected by insulation barriers or insulating shoulders, to avoid contact, due to incorrect installation of the terminal metal parts, with the insulation of the conductor.

Surface-type switches shall be constructed so that the fixing means do not damage the insulation of the cables during the installation.

Compliance is checked by inspection and by an installation test using conductors of the largest cross-sectional area specified, for the relevant ranges of rated currents, in Table 4.

NOTE 3 For surface-type switches, mounted on a mounting plate, a wiring channel may be needed to comply with this requirement.

In addition, for switches comprising screwless terminals, the switches shall be so constructed that the connecting and/or disconnecting means of the screwless terminals cannot be activated by the conductors during and after installation of the switch in a box or on a wall.

NOTE 4 This requirement does not imply that the connecting and/or disconnecting means cannot be touched by the conductors.

NOTE 5 This requirement can be met by the placement of the connecting and/or disconnecting means and/or the use of protective barriers or shoulders placed around the connecting and/or disconnecting means.

Compliance is checked by inspection and in case of doubt by the following test.

The test is carried out with a solid copper conductor having the smallest cross-sectional area specified in 12.3.2.

The conductor is pushed as far as possible into the terminal under test or is inserted so that adequate connection is obvious.

A test probe 1 of IEC 61032 is pushed against the connecting or disconnecting means with a force of 120 N in the direction opposite to the mounting direction as described in Figure 22a.

During the application of the force, the conductor, except for lead wires of pilot lights, is subjected to a pull of 30 N; the pull is applied in one smooth and continuous motion, for 1 min, in the direction of the longitudinal axis of the conductor space.

During the application of the pull, the conductor shall not come out of the screwless terminal.

The force of 120 N has to be applied before the force of 30 N is applied. The force of 30 N is maintained on the conductor during the complete test.

International Electrotechnical Commission
Provided by IHS under license with IEC
No reproduction or networking permitted without license from IHS

Care should be taken that the test probe does not touch the conductor during the application of the forces.

Where the axis between the application force and the axis through the force necessary to operate the connecting/disconnecting means deviates by more than 20°, it is allowed to exert the calculated resulting force directly onto the connecting/disconnecting means using the test probe. An example is shown in Figure 22b.

If the angle is greater than 60° no test is necessary and the product is deemed to comply with the requirements without further tests.

If it is not possible to exert a force onto the connecting/disconnecting device, the product is deemed to comply with the requirements without further tests.

In addition, switches classified as design A shall permit easy positioning and removal of the cover or cover plate, without displacing the conductors or activating the connecting and/or disconnecting means of screwless terminals.

NOTE 6 This requirement does not imply that the connecting and/or disconnecting means cannot be touched by the cover or cover plate.

13.3 Fixing of covers, cover plates and actuating members

13.3.1 Covers, cover plates and actuating members or parts of them, which are intended to ensure protection against electric shock, shall be held in place at two or more points by effective fixing.

Covers, cover plates and actuating members or parts of them may be fixed by means of a single fixing, for example by a screw, provided that they are located by another means (for example by a shoulder).

NOTE 1 The most appropriate method for fixings covers, cover plates or actuating members is to ensure that they are captive. The use of tight fitting washers of cardboard or the like is deemed to be an adequate method for securing screws intended to be captive.

NOTE 2 Non-earthed metal parts, separated from live parts in such a way that creepage distances and clearances have values specified in Table 23, are not considered as accessible if the requirements of 13.3 are met.

Where the fixing of covers, cover plates or actuating members of switches of design A serves to fix the main part there shall be means to maintain the main part in position, even after removal of the covers, cover plates or actuating members.

Compliance is checked according to 13.3.2, 13.3.3 or 13.3.4.

13.3.2 *For covers, cover plates or actuating members whose fixing is of the screw-type:*

by inspection only.

13.3.3 *For covers, cover plates or actuating members whose fixing is not dependent on screws and whose removal is obtained by applying a force in a direction approximately perpendicular to the mounting/supporting surface (see Table 12),*

– *when their removal may give access, with the test probe B of IEC 61032, to live parts:*

by the tests of 20.5;

– *when their removal may give access, with the test probe B of IEC 61032, to non-earthed metal parts separated from live parts in such a way that creepage distances and clearances have the values at least equal to those shown in Table 23:*

by the test of 20.6;

International Electrotechnical Commission
Provided by IHS under license with IEC
No reproduction or networking permitted without license from IHS

– *when their removal may give access, with the test probe B of IEC 61032, only to*
  - *insulating parts, or*
  - *earthed metal parts, or*
  - *metal parts separated from live parts in such a way that creepage distances and clearances have at least twice the values shown in Table 23, or*
  - *live parts of SELV circuits not greater than 25 V AC and 60 V DC:*

by the test of 20.7.

Table 12 – Forces to be applied to covers, cover-plates or actuating members whose fixing is not dependent on screws

Accessibility with the test probe B of IEC 61032 after removal of covers, cover plates or parts of them	Test according to ...	Force to be applied N			
		Switches complying with 20.8 and 20.9		Switches not complying with 20.8 and 20.9	
		Shall not come off	Shall come off	Shall not come off	Shall come off
To live parts	20.5	40	120	80	120
To non-earthed metal parts separated from live parts by creepage distances according to 23.1	20.6	10	120	20	120
To insulating parts, earthed metal parts, the live parts of SELV ≤ 25 V AC or metal parts separated from live parts by creepage distances and by clearances twice those according to 23.1	20.7	10	120	10	120

13.3.4 *For covers, cover plates or actuating members whose fixing is not dependent on screws and whose removal is obtained by using a tool, in accordance with the manufacturer's instructions given in an instruction sheet or catalogue:*

by the same tests of 13.3.3 except that the covers, cover plates, actuating members or parts of them need not come out when applying a force not exceeding 120 N in directions perpendicular to the mounting/supporting surface.

13.4 Openings in normal use

Switches shall be so constructed that, when they are fixed and wired as in normal use, there are no free openings in their enclosures according to their IP classification.

Compliance is checked by inspection and by an installation test with conductors of the smallest cross-sectional area specified in Table 4.

NOTE Drain holes, small gaps between enclosures and conduits or cables, or between enclosures and operating means can be neglected if they comply with the relevant IP classification.

13.5 Attachment of knobs

Knobs of rotary switches shall be securely attached to the shaft or part operating the mechanism.

Compliance is checked by the following test.

International Electrotechnical Commission
Provided by IHS under license with IEC
No reproduction or networking permitted without license from IHS

Where it is possible to apply an axial pull in normal use, an axial pull shall be applied for 1 min to try to pull off the actuating member.

If the shape of the actuating member is such that an axial pull is likely to be applied in normal use, the force is 30 N.

If the shape of the actuating member is such that an axial pull is unlikely to be applied in normal use, the force is 15 N.

After this, knobs of switches having only one direction of operation are turned, if possible, without undue force, 100 times in the reverse direction.

During the test, the knob shall not become detached.

13.6 Mounting means

Screws or other means for mounting the switch on a surface or in a box or enclosure shall be easily accessible from the front. These means shall not serve any other fixing purpose.

NOTE Switch mounting means, if used to lock the rotation of the box, do not constitute a use for "any fixing purpose".

13.7 Combination of switches

Combinations of switches, or of switches and socket-outlets, comprising separate bases shall be so designed that the correct position of each main part is ensured. The fixing of each main part shall be independent of the fixing of the combination to the mounting surface.

Compliance with the requirements of 13.6 and 13.7 is checked by inspection.

13.8 Accessories combined with switches

Accessories combined with switches shall comply with their relevant standard, if any, unless a standard exists for the combination.

13.9 Surface-type switches having an IP code higher than IP20

Surface-type switches that have an IP code higher than IP20 shall be according to their IP classification when fitted with conduits or with sheathed cables as for normal use.

Surface-type switches that have degrees of protection IPX4, IPX5 and IPX6 shall have provisions for opening a drain hole.

If a switch is provided with a drain hole, it shall be not less than 5 mm in diameter, or 20 mm^2 in area with a width and a length not less than 3 mm.

If the design of the switch is such that only one mounting position is possible, the drain hole shall be effective in that position. Alternatively, the drain hole shall be effective in at least two positions of the switch when this is mounted on a vertical wall, one of these with the conductors entering at the top and the other with the conductors entering at the bottom.

Lid springs, if any, shall be of corrosion resistant material, such as bronze or stainless steel.

Compliance is checked by inspection, by measurement and by the relevant tests of 15.2.

NOTE A drain hole in the back of the enclosure is deemed to be effective only if the design of the enclosure ensures a clearance of at least 5 mm from the wall, or provides a drainage channel of at least the size specified.

International Electrotechnical Commission
Provided by IHS under license with IEC
No reproduction or networking permitted without license from IHS

13.10 Installation in a box

Switches to be installed in a box shall be so designed that the conductor ends can be prepared after the box is mounted in position, but before the switch is fitted in the box.

In addition, the main part shall have adequate stability when mounted in the box.

Compliance is checked by inspection and by an installation test with conductors of the largest cross-sectional area specified for the relevant current rating in Table 4.

13.11 Connection of a second current-carrying conductor

Surface-type switches that have an IP code higher than IPX0, of pattern numbers 1, 5 and 6 with an enclosure having more than one inlet opening shall be provided for maintaining the continuity of a second current-carrying conductor either with a fixed additional terminal complying with the requirements of Clause 12 or with adequate space for a floating terminal.

Compliance is checked by inspection and by the relevant tests of Clause 12.

13.12 Inlet openings

Inlet openings shall allow the introduction of the conduit or the sheath of the cable so as to afford complete mechanical protection.

Surface-type switches shall be so constructed that the intended conduit or the sheath of the cable can enter at least 1 mm into the enclosure.

In surface-type switches, the inlet opening for conduit entries, or at least two of them if there are more than one, shall be capable of accepting conduit sizes of 16, 20, 25 or 32 or a combination of at least two of any of these sizes not excluding two of the same size.

Compliance is checked by inspection during the test of 13.10 and by measurement.

In surface-type switches, the inlet opening for cable entries shall preferably be capable of accepting cables having the dimensions specified in Table 13 or be as specified by the manufacturer.

NOTE Inlet openings of adequate size can also be obtained by the use of knock-outs or of suitable insertion pieces.

International Electrotechnical Commission
Provided by IHS under license with IEC
No reproduction or networking permitted without license from IHS

Table 13 – External cable diameter limits for surface type switches

Rated current A	Cross-sectional areas mm^2	Number of conductors	Limits of external diameter of cables	
			Minimum mm	Maximum mm
6	1,5	2	7,6	11,0
		3		11,9
		4		13,1
		5		14,4
10 and 13	1,5 up to and including 2,5	2	7,6	13,1
		3		14,0
		4		15,5
		5		17
16	1,5 up to and including 4	2	7,6	15,1
		3		16,2
		4		17,9
		5		19,9
20 25	2,5 up to and including 6	2	8,6	16,8
		3		18,0
		4		20,0
		5		22,2
32	4 up to and including 10	2	9,6	22,6
		3		24,2
		4		26,5
		5		29,1
40 45 50	6 up to and including 16	2	10,5	25,7
		3		27,6
		4		30,1
		5		33,3
63	10 up to and including 25	2	13	30,7
		3		33,0
		4		36,6
		5		40,4

NOTE The limits of external diameter of cables specified in this table are based on type 60227 IEC 10 according to IEC 60227-4 and type 60245 IEC 66 according to IEC 60245-4 and are given for information.

13.13 Provision for back entry from a conduit

If surface-type switches are intended for back entry from a conduit, they shall be so designed that they have provision for back entry from a conduit perpendicular to the mounting surface of the switch.

Compliance is checked by inspection.

International Electrotechnical Commission
Provided by IHS under license with IEC
No reproduction or networking permitted without license from IHS

13.14 Switch provided with membranes or the like for inlet openings

If the switch is provided with membranes or the like for inlet openings, they shall be replaceable.

Compliance is checked by inspection.

13.15 Requirements for membranes in inlet openings

13.15.1 Membranes shall be reliably fixed and shall not be displaced by the mechanical and thermal stresses occurring in normal use.

Compliance is checked by the following test:

Membranes are tested when assembled in the switches.

First the switches are fitted with membranes which have been subjected to the treatment specified in 15.1.

The switches are then placed for 2 h in a heating cabinet as described in 15.1, the temperature being maintained at (40 ± 2) °C.

Immediately after this period, a force of 30 N is applied for 5 s to various parts of the membranes by means of the tip of test probe 11 of IEC 61032.

During these tests, the membranes shall not deform to such an extent that the live parts become accessible.

For membranes likely to be subjected to an axial pull in normal use, an axial pull of 30 N is applied for 5 s.

During this test, the membranes shall not come out.

The test is then repeated with membranes which have not been subjected to any treatment.

13.15.2 It is recommended that membranes be so designed and made of such material that the introduction of the cables into the switch is permitted when the ambient temperature is low.

NOTE In the following countries, compliance with this requirement is considered as necessary, due to installation practices in cold conditions: SE, FI, DK and NO.

Compliance is checked by the following test:

The switches are fitted with membranes which have not been subjected to any ageing treatment, those without opening being suitably pierced.

The switches are then kept, for 2 h, in a refrigerator at a temperature of (−15 ± 2) °C.

After this period, the switches are removed from the refrigerator and immediately afterwards, while the switches are still cold, it shall be possible to introduce, without undue force, cables of the heaviest type, as declared by the manufacturer, through the membranes.

After the tests of 13.15.1 and 13.15.2, the membranes shall show no harmful deformation, cracks or similar damage which would lead to non-compliance with this document.

International Electrotechnical Commission
Provided by IHS under license with IEC
No reproduction or networking permitted without license from IHS

13.16 Pilot light units

Pilot light units shall comply with IEC 60669-2-1:2002, IEC 60669-2-1:2002/AMD1:2008 and IEC 60669-2-1:2002/AMD2:2015, 101.1.1.1 and Clause 102, as far as applicable.

14 Mechanism

14.1 Indication of the position

The actuating member of a switch, when released, shall automatically take up the position corresponding to that of the moving contacts, except that for cord-operated switches and for those with a single push-button, the actuating member may take up a single rest position.

14.2 Rest and intermediate position

Switches shall be so constructed that the moving contacts can come to rest only in the "on" and "off" positions, an intermediate position being, however, permissible if it corresponds to the intermediate position of the actuating member, and if the insulation between the fixed and the moving contacts is then adequate.

If necessary, the insulation between the fixed and the moving contact, when in an intermediate position, is checked by an electric strength test as specified in 16.3, the test voltage being applied between the relevant terminals without removing the cover or cover plate of the switch.

Compliance with the requirements of 14.1 and 14.2 is checked by inspection and by manual test.

14.3 Undue arcing

Switches shall be so constructed that undue arcing cannot occur when the switch is operated slowly.

Compliance is checked at the end of the test of 19.1, breaking the circuit a further ten times, the actuating member being, however, moved steadily by hand over a period of 2 s and moving contacts being stopped, if possible, in an intermediate position, the actuating member being then released.

During the test, no sustained arcing shall occur.

14.4 Making and breaking

Switches of pattern numbers 2, 3, 03 and 6/2 shall make and break all poles substantially simultaneously except that for switches of pattern number 03, the neutral shall not make after or break before the other poles.

Compliance is checked by inspection and by manual test when the switch is mounted with the cover, cover plates and actuating members installed as for normal use.

14.5 Action of the mechanism without cover or cover plate

The action of the mechanism if the covers or cover plates are removable for installation purposes shall be independent of the presence of the cover or cover plate.

NOTE The actuating member, in some constructions, can constitute the cover.

Compliance is checked by connecting the switch, without cover or cover plate fitted, in series with a lamp and by pressing the actuating member without undue force as in normal use.

International Electrotechnical Commission
Provided by IHS under license with IEC
No reproduction or networking permitted without license from IHS

During the test, the lamp shall not flicker.

14.6 Pull force for cord-operated switches

Cord-operated switches shall be capable of effecting a change from the "off" to the "on" position, and from the "on" to the "off" position by application and removal of a steady pull not exceeding 45 N applied vertically and 65 N applied at 45° ± 5° to the vertical and in a plane perpendicular to the mounting surface when the switches are mounted as in normal use as specified by the manufacturer.

Compliance is checked by manual test.

15 Resistance to ageing, protection provided by enclosures of switches and resistance to humidity

15.1 Resistance to ageing

Switches shall be resistant to ageing.

Parts intended for decorative purposes only, such as certain lids, shall be removed if possible and these parts are not subjected to the test.

Compliance is checked by the following test:

Switches and boxes, mounted as for normal use, are subjected to a test in a heating cabinet with an atmosphere having the composition and pressure of the ambient air and ventilated by natural circulation.

Switches having an IP code higher than IPX0 are tested after having been mounted and assembled as specified in 15.2.2.

The temperature in the cabinet is maintained at (70 ± 2) °C.

The specimens are kept in the cabinet for 7 days (168 h).

The use of an electrically heated cabinet is recommended.

Natural circulation may be provided by holes in the wall of the cabinet.

After the treatment, the specimens are removed from the cabinet and kept at room temperature and at a relative humidity between 45 % and 55 % for at least 4 days (96 h).

The specimens shall show no crack visible with normal or corrected vision without additional magnification, nor shall the material have become sticky or greasy, this being judged as follows:

With the forefinger wrapped in a dry piece of rough cloth the specimen is pressed with a force of 5 N.

No traces of the cloth shall remain on the specimen and the material of the specimen shall not stick to the cloth.

After the test, the specimens shall show no damage which would lead to non-compliance with this document.

NOTE The force of 5 N can be obtained in the following way:

International Electrotechnical Commission
Provided by IHS under license with IEC
No reproduction or networking permitted without license from IHS

The specimen is placed on one of the pans of a balance and the other pan is loaded with a mass equal to the mass of the specimen plus 500 g.

Equilibrium is then restored by pressing the specimen with the forefinger wrapped in a dry piece of rough cloth.

15.2 Protection provided by enclosures of switches

15.2.1 General

The enclosure of the switch shall provide protection against access to hazardous parts, against harmful effect due to ingress of solid foreign objects and against effects due to ingress of water in accordance with the IP classification of the switch.

Compliance is checked by the tests of 15.2.2 and 15.2.3.

15.2.2 Protection against access to hazardous parts and against harmful effects due to ingress of solid foreign objects

15.2.2.1 General

Enclosures of switches shall provide a degree of protection against access to hazardous parts and against harmful effects due to ingress of solid foreign objects in accordance with the IP classification of the switch.

Compliance is checked by the appropriate tests of IEC 60529 under the conditions specified below.

The switches are mounted as in normal use.

Flush-type and semi-flush-type switches are mounted in an appropriate box according to the manufacturer's instructions.

Switches with screwed glands or membranes are fitted and connected with cables within the connecting range specified in Table 4. Glands are tightened with a torque equal to two-thirds of that applied during the test of 20.4.

Screws of the enclosure are tightened with a torque equal to two-thirds of the values given in Table 5.

Parts which can be removed without the aid of a tool are removed.

If a switch passes the test successfully, then this test is deemed to be passed for a combination of such single switches.

Glands are not filled with sealing compound or the like.

15.2.2.2 Protection against access to hazardous parts

The appropriate test specified in IEC 60529 is performed (see also Clause 10).

15.2.2.3 Protection against harmful effects due to ingress of solid foreign bodies

The appropriate test according to IEC 60529 is performed.

Test probes are not applied to drain holes.

For the test of the first characteristic numeral 5, enclosures of switches are considered to be of category 2 (see IEC 60529:1989 and IEC 60529:1989/AMD1:1999, 13.4); dust shall not penetrate in a quantity to interfere with satisfactory operation or impair safety.

International Electrotechnical Commission
Provided by IHS under license with IEC
No reproduction or networking permitted without license from IHS

For the test of the first characteristic numeral 6, enclosures of switches are considered to be of category 1 (see IEC 60529:1989, 13.6); no dust shall penetrate.

15.2.3 Protection against harmful effects due to ingress of water

Enclosures of switches shall provide a degree of protection against harmful effects due to ingress of water in accordance with their IP classification.

Compliance is checked by the appropriate tests of IEC 60529 under the conditions specified below.

Flush-type and semi-flush-type switches are fixed in a test wall representing the intended use of the switch using an appropriate box in accordance with the manufacturer's instructions.

Where the manufacturer's instructions specify particular types of walls, these walls as well as any special installation requirements for the switch, shall be described in sufficient detail (see 8.7).

Where the manufacturer's instructions do not specify a type of wall, the test wall according to Figure 21 is used. It is made with bricks having flat smooth surfaces. When the box is mounted in the test wall, it shall fit tight against the wall so that water cannot enter between the box and the wall.

If sealing material is used in order to seal the box into the wall, it shall not influence the sealing properties of the specimen to be tested.

NOTE Figure 21 shows an example where the edge of the box is positioned in the reference plane. Other positions are possible according to the manufacturer's instructions.

The test wall is placed in a vertical position.

Surface-type switches are mounted as in normal use on a vertical surface and fitted with cables with conductors whose largest and smallest cross-sectional area is given in Table 4, as appropriate for their rating.

Screws of the enclosure operated when mounting the switch are tightened with a torque equal to two-thirds of the appropriate value given in Table 5.

Glands are tightened with a torque equal to two-thirds of the appropriate value given in Table 22.

Glands are not filled with sealing compound or the like.

Parts which can be removed without the aid of a tool are removed.

If the enclosure of a switch that has an IP code less than IPX5 is designed with drain holes, one drain hole is opened and in the lowest position. If an enclosure of a switch that has an IP code equal to or greater than IPX5 is designed with drain holes, they shall not be opened.

Care should be taken not to disturb, for example knock or shake, the assembly to such an extent as to affect test results.

If the switch has drain holes which have been opened, it shall be proved by inspection that any water which enters does not accumulate and that it drains away without doing any harm to the complete assembly.

International Electrotechnical Commission
Provided by IHS under license with IEC
No reproduction or networking permitted without license from IHS

The specimens shall withstand an electric strength test as specified in 16.3, which shall be started within 5 min of completion of the tests according to 15.2.

15.3 Resistance to humidity

Switches shall be proof against humidity which may occur in normal use.

Compliance is checked by the humidity treatment described in 15.3, followed immediately by the measurement of the insulation resistance and by the electric strength test specified in Clause 16.

Inlet openings, if any, are left open; if knock-outs are provided, one of them is opened.

Parts which can be removed without the aid of a tool are removed and subjected to the humidity treatment with the main part; spring lids are open during this treatment.

The humidity treatment is carried out in a humidity cabinet containing air with relative humidity maintained between 91 % and 95 %.

The temperature of the air in which the specimens are placed is maintained within ±1 K of any convenient value t between 20 °C and 30 °C.

Before being placed in the humidity cabinet, the specimens are brought to a temperature between t and t + 4 °C.

The specimens are kept in the cabinet for

- *two days (48 h) for switches that have an IP code IPX0;*
- *seven days (168 h) for switches that have an IP code higher than IPX0.*

NOTE In most cases, the specimens can be brought to the specified temperature by keeping them at this temperature for at least 4 h before the humidity treatment. A relative humidity between 91 % and 95 % can be obtained by placing in the humidity cabinet a saturated solution of sodium sulphate (Na_2SO_4) or potassium nitrate (KNO_3) in water having a sufficiently large contact surface with the air.

After this treatment, the specimens shall show no damage within the meaning of this document.

16 Insulation resistance and electric strength

16.1 General

The insulation resistance and electric strength of switches shall be adequate.

One pole of any pilot light is disconnected for the test of Clause 16.

Compliance is checked by the following tests, which are made immediately after the tests of 15.3, in the humidity cabinet or in the room in which the specimens were brought to the prescribed temperature, after reassembly of those parts which can be removed without the aid of a tool and were removed for the test.

16.2 Test for measuring the insulation resistance

The insulation resistance is measured with a DC voltage of approximately 500 V, the measurement being made not more than 1 min after application of the voltage.

The measurements are made consecutively for items 1, 2 and 3 of Table 15 with the switch position and the necessary connections as shown in Table 14.

International Electrotechnical Commission
Provided by IHS under license with IEC
No reproduction or networking permitted without license from IHS

In addition, if electrically independent pattern numbers are combined in a common base the measurements are made between all terminals of one pattern number connected together and to the body and to all terminals of the other pattern numbers connected together. This is repeated for each contact position and for each pattern number of the combination. The minimum insulation resistance shall be 5 MΩ.

Table 14 – Points of application of the test voltage for the verification of insulation resistance and electric strength

Pattern number	Diagrams of connections	Position	Number of poles	Application of the voltage [a]	
				Between Terminal No.	Between body (B) together with terminal No.
1	Single-pole switch	Off	1	1 2	B + 2 B + 1
		On		1 – 2	B
2	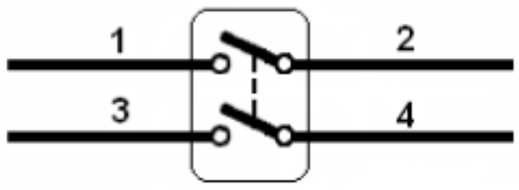 Two-pole switch	Off	2	1 + 3 2 + 4	B + 2 + 4 B + 1 + 3
		On		1 – 2 1 – 2 + 3 – 4	B + 3 – 4 B
3	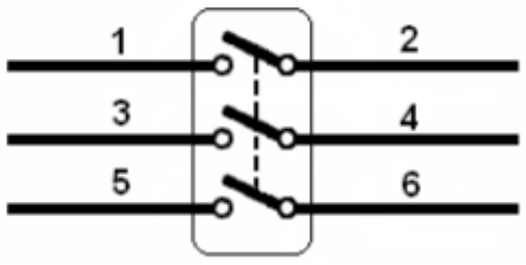 Three-pole switch	Off	3	1 + 3 + 5 2 + 4 + 6	B + 2 + 4 + 6 B + 1 + 3 + 5
		On		1 – 2 3 – 4 5 – 6	B + 3 – 4 + 5 – 6 B + 1 – 2 + 5 – 6 B + 1 – 2 + 3 – 4
03	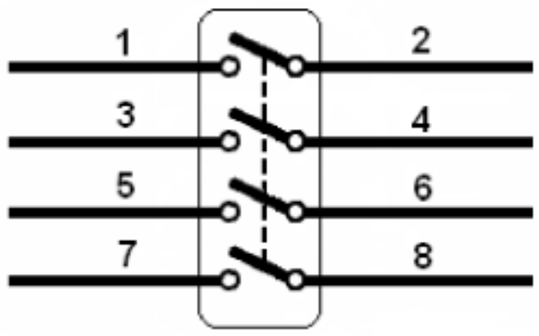 Three-pole plus switched neutral	Off	4	1 + 3 + 5 + 7 2 + 4 + 6 + 8	B + 2 + 4 + 6 + 8 B + 1 + 3 + 5 + 7
		On		1 – 2 + 5 – 6 1 – 2 + 7 – 8	B + 3 – 4 + 7 – 8 B + 3 – 4 + 5 – 6
4	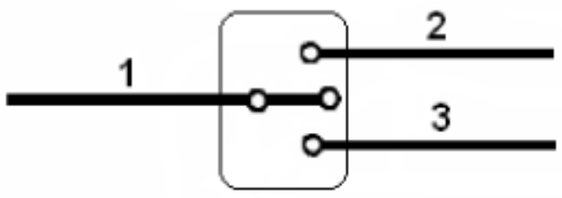 Two-way switch with one off position	Off	1	1	B + 2 + 3
		On		1 – 2 1 – 3	B + 3 B + 2
5	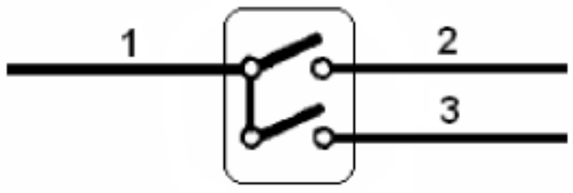 Two-circuit switch with a common incoming line	Off	1	2 + 3 1	B + 1 B + 2 + 3
		On		1 – 3 1 – 2 – 3	B + 2 B
6	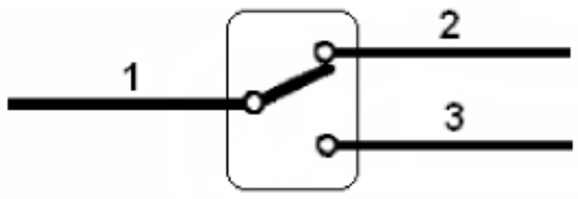 Two-way switch	–	1	1 – 3 1 – 2	B + 2 B + 3

International Electrotechnical Commission
Provided by IHS under license with IEC
No reproduction or networking permitted without license from IHS

Pattern number	Diagrams of connections	Position	Number of poles	Application of the voltage [a]	
				Between Terminal No.	Between body (B) together with terminal No.
6/2	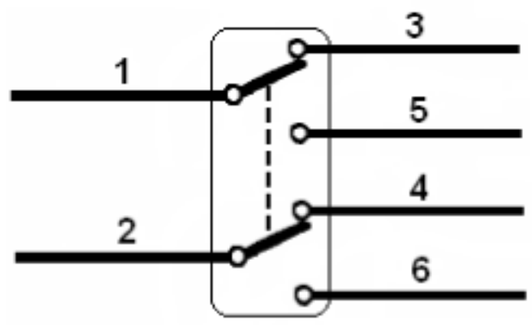 Two-way double-pole switch	–	2	1 – 3 + 2 – 4 1 – 5 + 2 – 6	B + 5 + 6 B + 3 + 4
7	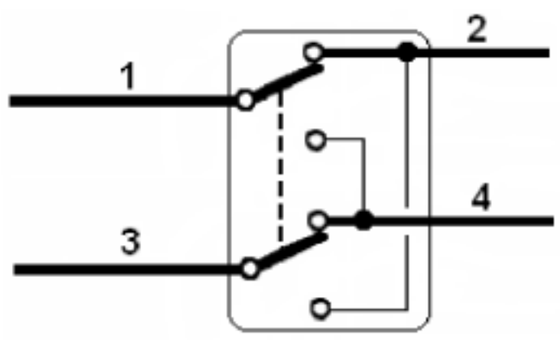 Two-way reversing switch (or intermediate switch)	–	1	1 – 2 3 – 4 1 – 4 2 – 3	B + 3 – 4 B + 1 – 2 B + 2 – 3 B + 1 – 4

[a] – *denotes an existing electrical connection.*
+ *denotes an electrical connection made for the test.*

The term "body" includes accessible metal parts, metal frames supporting the base of flush-type switches, operating keys, metal foil in contact with the outer surface of accessible external parts and operating keys of insulating material, the point of anchorage of the cord, chain or rod for switches operated by such means, fixing screws of main parts or covers and cover plates, external assembly screws, earthing terminals and any metal part of the mechanism if required to be insulated from live parts (see 10.4).

For the measurements according to items 1 and 2, the metal foil is applied in such a way that sealing compound is effectively tested.

The test according to item 5 is only made if any insulating lining is necessary to provide insulation.

The insulation resistance shall be not less than the values shown in Table 15.

While wrapping the metal foil round the outer surface or placing it in contact with the inner surface of parts of insulating material, it is pressed against holes or grooves without any appreciable force, by means of test probe 11 of IEC 61032.

16.3 Electric strength test

The insulation is subjected for 1 min to a voltage of substantially sine wave form, having a frequency of 50 Hz or 60 Hz.

The tests are made consecutively as indicated in Table 14 at points of application as described in Table 15, the switch position and the necessary connections for items 1, 2 and 3 of Table 15 being as shown in Table 14.

In addition, if electrically independent pattern numbers are combined in a common base the test is made between all terminals of the one pattern number connected together and to the body and to all terminals of the other pattern numbers connected together. This is repeated for each contact position and for each pattern number of the combination. The test voltage

International Electrotechnical Commission
Provided by IHS under license with IEC
No reproduction or networking permitted without license from IHS

applied shall be 1 250 V for ratings not exceeding 130 V or 2 000 V for ratings greater than 130 V.

Initially, not more than half the prescribed voltage is applied; then it is raised rapidly to the full value. No flashover or breakdown shall occur during the test.

The high-voltage transformer used for the test shall be so designed that, when the output terminals are short-circuited after the output voltage has been adjusted to the appropriate test voltage, the output current is at least 200 mA. The overcurrent relay shall not trip when the output current is less than 100 mA. The rms value of the test voltage applied shall be measured with an accuracy of ±3 %.

Glow discharges without drop in voltage shall be neglected.

NOTE In the following country the test of item 8 in Table 15 is conducted between live parts and metal knobs, push-buttons and metal foil in contact with the outer surface of accessible external parts and operating keys of insulating material: AU.

International Electrotechnical Commission
Provided by IHS under license with IEC
No reproduction or networking permitted without license from IHS

Table 15 – Test voltage, points of application and minimum values of insulating resistance for the verification of electric strength

Insulation to be tested	Minimum value of insulation resistance MΩ	Test voltage V	
		Switches having a rated voltage not exceeding 130 V	Switches having a rated voltage exceeding 130 V
1 Between all poles connected together and the body, with the switch in the "on" position.	5	1 250	2 000
2 Between each pole in turn and all other poles connected to the body, with the switch in the "on" position.	2	1 250	2 000
3 Between the terminals which are electrically connected together when the switch is in the "on" position, the switch being in the "off" position:			
– normal/mini-gap construction;	2	1 250	2 000
– micro-gap construction;	2	500 (note 1)	1 250 (note 2)
– semiconductor switching devices.	(note 3)	(note 3)	(note 3)
4 Between metal parts of the mechanism, when insulated from live parts, and			
– live parts;	5	1 250	2 000
– metal foil in contact with the surface of the knob or a similar actuating member;	5	1 250	2 000
– the key of key-operated switches, if insulation is required (see 10.6);	5	1 250	2 000
– the point of anchorage of the cord, chain or rod of switches operated by such means, if insulation is required (see 10.6);	5	1 250	2 000
– accessible metal parts, including fixing screws, of the main part, if insulation is required (see 10.5).	5	1 250	2 000
5 Between any metal enclosure and metal foil in contact with the inner surface of its insulating linings, if any (note 4).	5	1 250	2 000
6 Between live parts and accessible metal parts, if the metal parts of the mechanism are not insulated from live parts.	–	2 000	3 000
7 Between live parts and parts of the mechanism			
– if the latter parts are not insulated from accessible metal parts (see 10.5);	–	2 000	3 000
– if the latter parts are not insulated from the point of contact with a removable key or operating cord, chain or rod (see 10.6).	–	2 000	3 000
8 Between live parts and metal knobs, push-buttons and the like (see 10.2).	–	2 500	4 000

NOTE 1 This value also applies for the electric strength test after normal operation.

NOTE 2 For switches having a rated voltage up to and including 250 V, this value is reduced to

– 750 V for the electric strength test after resistance to humidity;

– 500 V for the electric strength test after normal operation.

NOTE 3 Tests for the verification to the "off" position of semiconductor switching devices according to item 3 are under consideration.

NOTE 4 This test is only made if any insulation is necessary.

NOTE 5 In the following country the test of item 8 is conducted between live parts and metal knobs, push-buttons and metal foil in contact with the outer surface of accessible external parts and operating keys of insulating material. The test voltage for switches with a rating voltage exceeding 130 V is to be 3 000 V: AU

International Electrotechnical Commission
Provided by IHS under license with IEC
No reproduction or networking permitted without license from IHS

17 Temperature rise

17.1 General

Switches shall be so constructed that the temperature rise in normal use is not excessive.

The metal and the design of the contacts shall be such that the operation of the switch is not adversely affected by oxidation or any other deterioration.

Compliance is checked by the following test:

The switches are mounted vertically as in normal use fitted with PVC insulated rigid solid or stranded copper conductors as specified in Table 16, the terminal screws or nuts being tightened with a torque equal to two-thirds of that specified in Table 5.

To ensure normal cooling of the terminal, the conductors connected to them shall have a length of at least 1 m.

The switches are loaded for 1 h with alternating current having the value shown in Table 16.

Table 16 – Temperature-rise test currents and cross-sectional areas of copper conductors

Rated current A	Test current A	Nominal cross-sectional area of conductors mm^2
1	1,5	0,5
2	3	0,75
4	5	1
6	8	1,5
10	13,5	2,5
13	17	2,5
16	20	4[a]
20	25	4
25	32	6
32	38	10
40	46	16
45	51	16
50	57,5	16
63	75	25

[a] For switches having a rated voltage not exceeding 250 V, other than those of pattern numbers 3 and 03, provided with screwless terminals, the test shall be carried out with conductors having a cross-sectional area of 2,5 mm^2.

NOTE 1 The test currents for switches having other rated currents are determined by interpolation between the next lower and higher ratings.

For switches of pattern numbers 4, 5, 6, 6/2 and 7, only one circuit is loaded.

Flush-mounted switches are mounted in flush-mounted boxes. The box is placed in a block of pinewood filled around the box with plaster so that the front edge of the box does not protrude and is not more than 5 mm below the front surface of the pinewood block.

The test assembly should be allowed to dry for at least 7 days when first made.

International Electrotechnical Commission
Provided by IHS under license with IEC
No reproduction or networking permitted without license from IHS

The size of the pinewood block, which may be fabricated from more than one piece, shall be such that there is at least 25 mm of wood surrounding the plaster, the plaster having a thickness between 10 mm and 15 mm around the maximum dimensions of the sides and rear of the box.

NOTE 2 The sides of the cavity in the pinewood block can have a cylindrical shape.

The cables connected to the switch shall enter through the top of the box, the point(s) of entry being sealed to prevent the circulation of air. The length of each conductor within the box shall be (80 ± 10) mm.

Surface-type switches shall be mounted centrally on the surface of a wooden block, which shall be at least 20 mm thick, 500 mm wide and 500 mm high.

Other types of switches shall be mounted according to the manufacturer's instructions or, in the absence of such instructions, in the position of normal use considered to give the most onerous conditions.

The test assembly shall be placed in a draught-free environment for the test.

The temperature is determined by means of melting particles, colour changing indicators or thermocouples, so chosen and positioned that they have negligible effect on the temperature being determined.

The temperature rise of the terminals shall not exceed 45 K.

During the test, the temperature rise necessary to perform the test of 21.4 shall be determined.

NOTE 3 Sliding action or the use of silver or silver-faced contacts prevents undue oxidation of the contacts.

In the case of combination of switches, the test is carried out separately on each switch.

17.2 Switches incorporating pilot lights

Switches incorporating pilot lights or intended to incorporate pilot lights shall be so designed that in normal use the temperature of accessible surfaces is not excessive.

Compliance is checked by the following test:

The switch is mounted and connected as in 17.1 with the pilot light supplied at rated voltage so that it is constantly illuminated for 1 h. The switch is loaded at its rated current.

The temperature rise of the external surface of the switch shall not exceed:

- *45 K for knobs, handles, sensing surfaces, etc., of non-metallic material;*
- *55 K for other external parts of non-metallic material;*
- *35 K for knobs, handles, sensing surfaces, etc., of metallic material;*
- *45 K for other external parts of metallic material.*

Pilot lights using neon lamps or LEDs consuming no more than 3 mA are not tested.

International Electrotechnical Commission
Provided by IHS under license with IEC
No reproduction or networking permitted without license from IHS

18 Making and breaking capacity

18.1 General

Switches shall have adequate making and breaking capacity.

For the purpose of this test, pilot lights are disconnected.

Compliance is checked by the test of 18.2. In addition, for switches having a rated current not exceeding 16 A with a rated voltage up to and including 250 V and for switches of pattern numbers 3 or 03 having a rated voltage over 250 V, by the tests of 18.3.

Cord-operated switches shall be tested mounted as in normal use and with a pull of a value adequate to operate the cord-operated switch, but not exceeding 50 N, on the cord throughout the test, at 30° ± 5° to the vertical and in a plane perpendicular to the mounting surface.

The tests are made by means of an apparatus.

The connections are shown in Figure 11.

For switches of pattern number 7, one side is tested as pattern number 6. The test is repeated on the other side of a new set of specimens if the other side is not identical.

For switches of pattern numbers 6, 6/2 and 7, the selector switch S shown in Figure 11 is moved after the fraction of the total number of operations indicated in Table 17.

Switches are fitted with conductors as for the test of Clause 17.

NOTE In the following country, switches intended to control the inrush current of motors are tested according to 13.13 (Motor Control Test) of AS/NZ 3133:2013: AU.

18.2 Overload

Switches are tested at 1,1 times the rated voltage and 1,25 times the rated current.

The tolerance for the test voltage and test current is $^{+5}_{0}$ *%.*

They are subjected to 200 operations at a uniform rate of

- *30 operations per minute if the rated current does not exceed 13 A;*
- *15 operations per minute if the rated current exceeds 13 A but is less than 25 A;*
- *7,5 operations per minute if the rated current is 25 A or more.*

The on period shall be (25^{+5}_{0}) *% of the total cycle and the off period* (75^{0}_{-5}) *%.*

For rotary switches intended to be operated in either direction, the actuating member is turned in one direction for half the total number of operations and in the reverse direction for the remainder.

Switches are tested using an alternating current having a cos φ *of 0,3 ± 0,05. Resistors and inductors are not connected in parallel, except that, if an air core inductor is used, a resistor taking approximately 1 % of the current through the inductor is connected in parallel with it.*

Iron core inductors may be used, provided the current is of substantially sine wave form.

International Electrotechnical Commission
Provided by IHS under license with IEC
No reproduction or networking permitted without license from IHS

For three phase tests, three core inductors are used.

The metal support of the switch, if any, on which the switch is mounted, and the accessible metal parts of the switch, if any, shall be earthed through a wire fuse which shall not blow during the test. The fuse element shall consist of a copper wire of 0,1 mm in diameter and not less than 50 mm in length.

Table 17 – Fractions of total number of operations

Pattern number	Type of switch	Fraction for switch S
1, 2, 4 or 5	Rotary, both directions	–
	Other types	–
3 or 03	Rotary, both directions	–
	Other types	–
6, 6/2 or 7	Rotary, both directions	1/4 and 3/4
	Other types	1/2

Switches of pattern number 5 with a single actuating member are operated 200 times with one circuit loaded with rated current (I_n) and the other with 0,25 I_n and 200 times with each circuit loaded with 0,625 I_n.

Switches of pattern number 5 with two independent actuating members are tested as two switches of pattern number 1, the tests being made consecutively. If both circuits are identical, only one circuit need be tested.

While testing one part, the other part is in the "off" position.

Switches of pattern number 4 shall be tested for half the number of operations on one way and half the number of operations on the other way.

During the test, no sustained arcing nor welding of the contacts shall occur.

Sticking of the contacts which does not prevent further operation of the switch is not regarded as welding.

Sticking of contacts is permitted if the contacts can be separated with a force applied to the actuator of a value which does not damage the switch mechanically.

For the purpose of this test, blows which are intended to separate welded contacts are not permitted.

After the test, the specimens shall show no damage which may impair their use.

Breakage of the replaceable pull cord not involving the part entering the cord-operated switch shall not be considered a failure to pass the test.

Care is taken that the test apparatus makes the actuating member of the switch operate smoothly and does not interfere with the normal action of the switch mechanism and the free movement of the actuating member.

During the test, the specimens are not lubricated.

International Electrotechnical Commission
Provided by IHS under license with IEC
No reproduction or networking permitted without license from IHS

18.3 Overload test with filament lamps

Switches are normally tested at the rated voltage and at 1,2 times the rated current.

The test is carried out by using either a number of 200 W tungsten filament lamps or a number of halogen filament lamps.

As the characteristics of halogen filament lamps of different power are equivalent, lamps of any power can be used to reach the rated load.

If filament lamps with rated voltage equal to the rated voltage of the switch are not available, filament lamps with the nearest lower voltage shall be used.

It is recommended that the rated voltage of the filament lamps be no lower than 95 % of the rated voltage of the switch.

The test voltage shall be the rated voltage of the lamps. The number of lamps shall be the smallest number giving a test current not less than 1,2 times the rated current of the switch.

Available short-circuit current shall be at least 1 500 A. The other conditions shall be as specified in 18.2.

During the test, no sustained arcing nor welding of the contacts shall occur.

Sticking of the contacts which does not prevent further operation of the switch is not regarded as welding.

Sticking of contacts is permitted if the contacts can be separated with a force applied to the actuator of a value which does not damage the switch mechanically.

For the purpose of this test, blows which are intended to separate welded contacts are not permitted.

After the test, the specimens shall show no damage which may impair their further use.

EXAMPLE 10 A 250 V switches have to be tested.

The largest available rated voltage of 200 W tungsten filament lamps is 240 V.

The test voltage is then 240 V and the number of lamps is

$$\frac{240 \times 1{,}2 \times 10}{200} = 14{,}4 \rightarrow 15$$

19 Normal operation

19.1 Test for switches intended for inductive loads

Switches shall withstand, without excessive wear or other harmful effect, the mechanical, electrical and thermal stresses occurring in normal use.

For the purpose of this test, pilot lights are disconnected.

Compliance is checked by the following test.

International Electrotechnical Commission
Provided by IHS under license with IEC
No reproduction or networking permitted without license from IHS

The switches are tested at rated voltage and rated current in the apparatus and with the connections specified in Clause 18.

The tolerance for the test voltage and test current is $^{+5}_{0}$ *%.*

The circuit details and the manner of operation of the selector switch S are described in 18.2, unless otherwise specified.

The number of operations is shown in Table 18.

Table 18 – Number of operations for normal operation test

Rated current	Number of operations
Up to and including 16 A, for switches having a rated voltage not exceeding 250 V, except for pattern numbers 3 and 03	40 000
Up to and including 16 A, for switches having a rated voltage exceeding 250 V and for pattern numbers 3 and 03	20 000
Over 16 A up to and including 50 A	10 000
Over 50 A	5 000

The rate of operation is as specified in 18.2.

The on period shall be (25^{+5}_{0}) *% of the total cycle and the off period* (75^{0}_{-5}) *%.*

For rotary switches of pattern number 5 intended to be operated in either direction, the actuating member is turned in one direction for half the total number of operations and in the reverse direction for the remainder.

For other rotary switches intended to be operated in either direction, three quarters of the total number of operations are effected in the clockwise direction and the remainder in the reverse direction.

Cord-operated switches shall be tested mounted as in normal use and with a pull of a value adequate to operate the cord-operated switch, but not exceeding 50 N, on the cord throughout the test at 30° ± 5° to the vertical and in a plane perpendicular to the mounting surface.

Switches are tested using an alternating current having a cos φ *of 0,6 ± 0,05.*

Switches of pattern number 2 are tested with the poles connected in series as shown in Figure 11.

The two circuits of switches of pattern number 5 are tested as two switches of pattern number 1. If both circuits are identical, only one circuit need be tested.

For switches of pattern number 5 with a single actuating member, each circuit is loaded with 0,5 times the rated current.

Switches of pattern numbers 4 and 6 shall be tested for half the number of operations on one way and half the number of operations on the other way.

Switches of pattern number 6/2 are tested as one switch of pattern number 6 if the two pairs of poles are identical. Otherwise, they are tested as two switches of pattern number 6.

International Electrotechnical Commission
Provided by IHS under license with IEC
No reproduction or networking permitted without license from IHS

For switches of pattern number 7 one side is tested as pattern number 6. The second set of specimens used for the test of Clause 18 is submitted to this test on the side already tested.

The test specimens shall be connected to the test circuit with cables of length (1 ± 0,1) m.

During the test, the specimens shall function correctly.

After the test, the specimens shall withstand an electric strength test as specified in Clause 16 and a terminal temperature rise test as specified in Clause 17.

For the electric strength test, the test voltage of 4 000 V shall be reduced by 1 000 V and the other test voltages by 500 V. For the terminal temperature rise test, the test current shall be reduced to the value of the rated current and the only measurement made shall be at the terminals.

The specimens shall then not show

- *wear impairing their further use;*
- *discrepancy between the position of the actuating member and that of the moving contacts, if the position of the actuating member is indicated;*
- *deterioration of enclosures, insulating linings or barriers to such an extent that the switch cannot be further operated or that it no longer complies with the requirements of Clause 10;*
- *seepage of sealing compound;*
- *loosening of electrical or mechanical connections;*
- *relative displacement of the moving contacts of switches of pattern numbers 2, 3, 03 or 6/2.*

NOTE The humidity treatment of 15.3 is not repeated before the electric strength test of 19.1.

During the test, the specimens are not lubricated.

The test is followed by the test of 14.3.

Sticking of the contacts which does not prevent further operation of the switch is not regarded as welding.

Sticking of contacts is permitted if the contacts can be separated with a force applied to the actuator of a value which does not damage the switch mechanically.

During the test, no sustained arcing nor welding of the contacts shall occur.

For the purpose of this test, blows which are intended to separate welded contacts are not permitted.

Breakage of the replaceable pull cord not involving the part entering the cord-operated switch shall not be considered a failure to pass the test.

19.2 Test for switches intended for externally ballasted lamp loads

Switches intended for externally ballasted lamp loads shall withstand, without excessive wear or other harmful effect, the electrical and thermal stresses occurring when controlling externally ballasted lamp circuits.

Compliance is checked by the test circuit indicated in Figure 12a with the following test conditions.

International Electrotechnical Commission
Provided by IHS under license with IEC
No reproduction or networking permitted without license from IHS

The prospective short-circuit current of the supply shall be between 3 kA and 4 kA at cos φ = 0,9 ± 0,05 (lagging).

F is a copper-wire fuse of 0,1 mm nominal diameter having a length not less than 50 mm.

R_1 is a resistor limiting the current to about 100 A.

The twin-core cable shall have a suitable length to give a resistance R_3 equal to 0,25 Ω in the test circuit to the load. It shall have a cross-sectional area of 1,5 mm^2 when switches with rated current up to and including 13 A are being tested and 2,5 mm^2 when switches with rated current over 13 A up to and including 20 A are being tested.

Load A shall consist of

- *C_1, a capacitor bank having a capacitance of 70 μF ± 10 % for 6 A switches and 140 μF ± 10 % for other switches. The capacitors shall be connected with 2,5 mm^2 conductors having the shortest possible length;*
- *L_1 and R_2, an inductor and a resistor adjusted to give the power factor of 0,9 ± 0,05 (lagging) and the test current $I_n{}^{+5}_{0}$ % through the specimen.*

NOTE The circuit parameters have been chosen to represent the externally ballasted lamp loads used in most practical applications.

For the test, new specimens are used.

The switches are tested at rated voltage and at the rated current assigned by the manufacturer for the externally ballasted lamp loads in the test apparatus and with the connections specified in 18.2.

The tolerance of the test voltage is ± 5 % and that for the test current is $^{+5}_{0}$ %. The circuit details and the manner of operation of the selector switch S are as described in 18.2.

The number of operations is as follows:

For switches with a rated externally ballasted lamp current of 6 A up to and including 13 A: 10 000 operations with 30 operations per minute.

For switches with rated current above 13 A up to and including 20 A: 5 000 operations with 15 operations per minute.

For rotary switches of pattern number 5 intended to be operated in either direction, the actuating member is turned in one direction for half the total number of operations and in the reverse direction for the remainder.

For other rotary switches intended to be operated in either direction, three quarters of the total number of operations are effected in the clockwise direction, and the remainder in the reverse direction.

Cord-operated switches shall be tested mounted as in normal use and with a pull of a value adequate to operate the cord-operated switch, but not exceeding 50 N, on the cord throughout the test at 30° ± 5° to the vertical and in a plane perpendicular to the mounting surface.

Switches of pattern number 2 are tested with the poles connected in series.

International Electrotechnical Commission
Provided by IHS under license with IEC
No reproduction or networking permitted without license from IHS

The two circuits of switches of pattern number 5 are tested as two switches of pattern number 1. If the circuits are identical, only one circuit need be tested.

Switches of pattern numbers 4 and 6 shall be tested for half the number of operations on one way and half of the number of operations on the other way.

Switches of pattern number 6/2 are tested as one switch of pattern number 6, if the two pairs of poles are identical. Otherwise, they are tested as two switches of pattern number 6.

For switches of pattern number 7, one side is tested as pattern number 6. The test is repeated on the other side of a new set of specimens if the other side is not identical.

The test specimens shall be connected to the test circuit with cables of length (1 ± 0,1) m. The load shall be as specified in Figure 12a, load A.

The metal support of the switch, if any, on which the switch is mounted, and the accessible metal parts of the switch, if any, shall be earthed through a wire fuse which shall not blow during the test. The fuse element shall consist of a copper wire of 0,1 mm in diameter not less than 50 mm in length.

During this test, the switch shall be operated so that the test apparatus does not interfere with the normal action of the switch mechanism and the free movement of the actuating member.

There shall be no forced actuation. The "on" period shall be 25 $(^{+5}_{0})$ % of the total cycle and the "off" period 75 $(^{0}_{-5})$ %.

During the test, no sustained arcing nor welding of the contacts shall occur.

Sticking of the contacts which does not prevent further operation of the switch is not regarded as welding.

Sticking of contacts is permitted if the contacts can be separated with a force applied to the actuator of a value which does not damage the switch mechanically.

For the purpose of this test, blows which are intended to separate welded contacts are not permitted.

During the test, the specimens shall function correctly.

After the test, the specimens shall withstand an electric strength test as specified in Clause 16 and a terminal temperature rise test as specified in Clause 17.

For the electric strength test, the test voltage of 4 000 V shall be reduced by 1 000 V and the other test voltages by 500 V. For the terminal temperature rise test, the test current shall be reduced to the value of the rated current and the only measurement made shall be at the terminals.

After these tests, it shall also be possible to make and break the switch by hand in the test circuit and the specimen shall not show

- *wear impairing further use;*
- *discrepancy between the position of the actuating member and that of the moving contacts, if the position of the actuating member is indicated;*

International Electrotechnical Commission
Provided by IHS under license with IEC
No reproduction or networking permitted without license from IHS

– *deterioration of the enclosures, insulating lining or barriers to such an extent that the switch cannot be further operated or that it no longer complies with the requirements of Clause 10;*

– *loosening of electrical or mechanical connections;*

– *seepage of sealing compound;*

– *relative displacement of the moving contacts of switches of pattern numbers 2, 3 or 6/2.*

Breakage of the replaceable pull cord not involving the part entering the cord-operated switch shall not be considered a failure to pass the test.

19.3 Test for switches intended for self ballasted lamp loads

Switches intended for self ballasted lamp (SBL) loads shall withstand, without excessive wear or other harmful effect, the electrical and thermal stresses occurring when controlling self ballasted lamp circuits.

Compliance is checked by connecting the load as given in Figure 12b via the switch under test to a power supply.

The calculations are based on the following parameters in order to have the required values for inrush current and I^2t:

– *a prospective short-circuit current (rms) of the supply of 3 kA at cos φ = 0,9 (lagging);*

– *a resistance R_3 equal to 0,25 Ω in the test circuit to the load. This value is obtained with a wire having a cross-sectional area of 1,5 mm^2 when switches with rated current up to and including 13 A are being tested and 2,5 mm^2 when switches with rated current over 13 A up to and including 20 A are being tested.*

The load shall be in accordance with Figure 12b. The values for the maximum peak value and the maximum I^2t of the inrush current are given in Table 19.

NOTE 1 R_2 is the total series resistance in the lamp circuit including the ESR (equivalent series resistance) value of the capacitor.

The values of R_2 and C in load B shall be chosen in order to reach the values ($\pm$5 %) for I_{peak} and I^2t as given in Table 19 when the switching contact closes at 90° $\pm$ 5° phase-angle.

The value of R_4 shall be chosen to reach the current in amperes to reach the corresponding SBL power as given in Table 19.

International Electrotechnical Commission
Provided by IHS under license with IEC
No reproduction or networking permitted without license from IHS

Table 19 – Values for I_{peak} and I^2t depending on the type of distribution system

Rated current (A)	Distribution system [V]: 220/380 230/400 240/415 I_{peak} [A]	Distribution system [V]: 220/380 230/400 240/415 I^2t [A^2s]	Distribution system [V]: 120/208 120/240 127/220 I_{peak} [A]	Distribution system [V]: 120/208 120/240 127/220 I^2t [A^2s]	Distribution system [V]: 220/380 230/400 240/415 Rated power of the SBL circuit [W]	Distribution system [V]: 120/208 120/240 127/220 Rated power of the SBL circuit [W]
Up to and including 10	108	2,8	162	5,9	100	60
Above 10 up to and including 13	142	5,5	162	5,9	150	60
Above 13 up to and including 16	170	9	200	11,5	200	100
Above 16 up to and including 20	192	13	231	18,5	250	150

Switches with a rated voltage of 250 V shall be considered as switches for a distribution system 230/400 V.

Switches with a rated voltage of 130 V shall be considered as switches for a distribution system 120/208 V.

Table 20 – Calculated circuit parameters

Rated current (A)	230 V		120 V	
	R_2 [Ω]	C [μF]	R_2 [Ω]	C [μF]
Up to and including 10	1,9	125	0,28	280
Above 10 up to and including 13	1,25	180	0,28	280
Above 13 up to and including 16	0,95	240	0,17	445
Above 16 up to and including 20	0,8	310	0,11	640

For other rated voltages and currents the values need to be recalculated

The values in Table 20 are given for information only. The circuit shall be adjusted to reach the I_{peak} and I^2t values of Table 19.

Compliance is checked by the following test:

For the test, new specimens are used.

The switches are tested at rated voltage in the apparatus and with the connections specified in 18.2.

The tolerance of the test voltage is ±5 %.

The circuit details and the manner of operation of the selector switch S are as described in 18.2.

The number of operations is shown in Table 18.

International Electrotechnical Commission
Provided by IHS under license with IEC
No reproduction or networking permitted without license from IHS

The rate of operation is as specified in 18.2.

The on period shall be (25^{+5}_{0}) *% of the total cycle and the off period* (75^{0}_{-5}) *%.*

For rotary switches of pattern number 5 intended to be operated in either direction, the actuating member is turned in one direction for half the total number of operations and in the reverse direction for the remainder.

For other rotary switches intended to be operated in either direction, three quarters of the total number of operations are effected in the clockwise direction, and the remainder in the reverse direction.

Cord-operated switches shall be tested mounted as in normal use and with a pull of a value adequate to operate the cord-operated switch, but not exceeding 50 N, on the cord throughout the test at 30° ± 5° to the vertical and in a plane perpendicular to the mounting surface.

Switches of pattern number 2 are tested with the poles connected in series.

The two circuits of switches of pattern number 5 are tested as two switches of pattern number 1. If the circuits are identical, only one circuit need be tested.

Switches of pattern numbers 4 and 6 shall be tested for half the number of operations on one way and half the number of operations on the other way.

Switches of pattern number 6/2 are tested as one switch of pattern number 6, if the two pairs of poles are identical. Otherwise, they are tested as two switches of pattern number 6.

For switches of pattern number 7, one side is tested as pattern number 6. The test is repeated on the other side of a new set of specimens if the other side is not identical.

The test specimens shall be connected to the test circuit with cables of length (1 ± 0,1) m.

The metal support of the switch, if any, on which the switch is mounted, and the accessible metal parts of the switch, if any, shall be earthed through a wire fuse (F) which shall not blow during the test. The fuse element shall consist of a copper wire of 0,1 mm diameter and not less than 50 mm in length. R_1 *is a resistor limiting the current to about 100 A.*

During this test, the switch shall be operated so that the test apparatus does not interfere with the normal action of the switch mechanism and the free movement of the actuating member.

There shall be no forced actuation.

No sustained arcing or welding of the contacts shall occur.

Sticking of the contacts which does not prevent the next operation of the switch is not regarded as welding.

Sticking of contacts is permitted if the contacts can be separated with a force applied to the actuator of a value which does not damage the switch mechanically.

For the purpose of this test, it is not permitted to apply blows to open welded contacts.

After the test, the specimens shall withstand an electric strength test as specified in Clause 16 and a terminal temperature rise test as specified in Clause 17.

International Electrotechnical Commission
Provided by IHS under license with IEC
No reproduction or networking permitted without license from IHS

For the electric strength test, the test voltage of 4 000 V shall be reduced by 1 000 V and the other test voltages by 500 V. For the terminal temperature rise test, the test current shall be reduced to the value of the rated current and the only measurement made shall be at the terminals.

After these tests, it shall also be possible to make and break the switch by hand in the test circuit and the specimen shall not show:

- *wear impairing further use;*
- *discrepancy between the position of the actuating member and that of the moving contacts, if the position of the actuating member is indicated;*
- *deterioration of the enclosures, insulating lining or barriers to such an extent that the switch cannot be further operated or that it no longer complies with the requirements of Clause 10;*
- *loosening of electrical or mechanical connections;*
- *seepage of sealing compound;*
- *relative displacement of the moving contacts of switches of pattern numbers 2, 3 or 6/2.*

Breakage of the replaceable pull cord not involving the part entering the cord-operated switch shall not be considered a failure to pass the test.

20 Mechanical strength

20.1 General

The test of the relevant subclauses 20.5 to 20.9 shall be applied according to the type of construction as specified in 13.3.

Accessories, surface mounting boxes, screwed glands and shrouds shall have adequate mechanical strength so as to withstand the stresses imposed during installation and use.

Compliance is checked by the following tests:

- *all types of switches 20.2*
- *for switches with a base intended to be mounted directly on a surface. 20.3*
- *for boxes 20.2*
- *for screwed glands of switches that have an IP code higher than IP20 ..... 20.4*
- *for operating members of cord-operated switches..... 20.10*

Combinations of switches or of switches and socket-outlets are tested in the following way:

- *in the case of one common cover, as a single product;*
- *in the case of separate covers, as separate products.*

20.2 Pendulum hammer test

The specimens are checked by applying blows by means of the pendulum hammer test apparatus as described in IEC 60068-2-75 (test Eha), with an equivalent mass of 250 g.

The specimens are mounted on a sheet of plywood, 8 mm nominal thickness and approximately 175 mm square, secured at its top and bottom edges to a rigid bracket which is part of the mounting support.

The mounting support shall have a mass of (10 ± 1) kg and shall be mounted on a rigid frame by means of pivots. The frame is fixed to a solid wall.

International Electrotechnical Commission
Provided by IHS under license with IEC
No reproduction or networking permitted without license from IHS

The design of the mounting is such that

- *the specimen can be so placed that the point of impact lies in the vertical plane through the axis of the pivot;*
- *the specimen can be removed horizontally and turned about an axis perpendicular to the surface of the plywood;*
- *the plywood can be turned 60°, in both directions, about a vertical axis.*

The switches and boxes are mounted on the plywood as in normal use.

Inlet openings which are not provided with knock-outs, are left open; if they are provided with knock-outs, one of them is opened.

For flush-type switches the specimen is mounted in a recess provided in a block of hornbeam or similar material, which is fixed to a sheet of plywood, and not in its relevant mounting box. If wood is used for the block, the direction of the wood fibres shall be perpendicular to the direction of the impact.

Flush-type screw fixing switches shall be fixed by means of the screws to lugs recessed in the hornbeam block. Flush-type claw fixing switches shall be fixed to the block by means of the claws.

Before applying the blows, fixing screws of main parts and covers are tightened with a torque equal to two-thirds of the relevant value specified in column 3 or 5 as applicable, of Table 5.

The specimens are mounted so that the point of impact lies in a vertical plane through the axis of the pivot.

The striking element is allowed to fall from a height which is specified in Table 21.

Table 21 – Height of fall for impact test

Height of fall mm	Parts of enclosures to be subjected to the impact[a]	
	Switches having an IP code IPX0	Switches having an IP code higher than IPX0
80	A and B	–
120	C	A and B
160	D	C
200	–	D

[a] Parts of enclosures are defined as follows:

A parts on the front surface, including the parts which are recessed;

B parts which do not project more than 15 mm from the mounting surface (distance from the wall) after mounting as in normal use, with the exception of the above parts A;

C parts which project more than 15 mm and not more than 25 mm from the mounting surface (distance from the wall) after mounting as in normal use, with the exception of the above parts A;

D parts which project more than 25 mm from the mounting surface (distance from the wall) after mounting as in normal use, with the exception of the above parts A.

The impact energy determined by the part of the specimen which projects most from the mounting surface is applied on all parts of the specimen, with the exception of its parts A.

Parts of accessories exclusively intended for mounting in panel-boards are submitted to impacts which are obtained by allowing the striking element to fall from the height of 100 mm; impacts shall only be applied on parts which are accessible after mounting the accessory in the panel board.

International Electrotechnical Commission
Provided by IHS under license with IEC
No reproduction or networking permitted without license from IHS

The height of fall is the vertical distance between the position of the checking point when the pendulum is released and the position of that point at the moment of impact. The checking point is marked on the surface of the striking element where the line through the point of intersection of the axes of the steel tube of the pendulum and the striking element and perpendicular to the plane through both axes, meets the surface.

The specimens are subjected to nine blows, which are evenly distributed over the specimens. The blows are not applied to knock-out areas. The following blows are applied:

– *for parts A, five blows:*
  - *one blow in the centre, after the specimen has been moved horizontally;*
  - *one each on the unfavourable points between the centre and the edges; and then*
  - *one each on similar points after the specimen has been turned 90° about its axis perpendicular to the plywood;*
– *for parts B (as far as applicable), C and D, four blows:*
  - *two blows on each of the two sides of the specimen on which blows can be applied after the plywood sheet has been turned 60° in each of the opposite directions;*
  - *two blows on each of the other two sides of the specimen on which blows can be applied after the specimen has been turned 90° about its axis perpendicular to the plywood sheet and the plywood sheet has been turned 60° in each of the opposite directions.*

If inlet openings are provided, the specimen is so mounted that the two lines of blows are as nearly as possible equidistant from these openings.

Cover plates and other covers of multiple switches are treated as cover plates or covers of single switches.

For switches that have an IP code higher than IPX0 the test is carried out with any lids closed and the appropriate number of blows is then applied to those parts which are exposed when the lids are open.

After the test, the specimen shall show no damage within the meaning of this document. In particular live parts shall not become accessible.

After the test on a lens (window for pilot lights), the lens may be cracked and/or dislodged, but it shall not be possible to touch live parts with

– *the test probe B of IEC 61032 under the conditions stated in 10.1;*
– *the test probe 11 of IEC 61032 under the conditions stated in 10.1, but with a force of 10 N.*

In case of doubt, it is verified that it is possible to remove and to replace external parts, such as boxes, enclosures, covers and cover plates, without these parts or their insulating lining being broken.

If, however, a cover plate, backed by an inner cover, is broken, the test is repeated on the inner cover, which shall remain unbroken.

Damage to the finish, small dents which do not reduce creepage distances or clearances below the value specified in 23.1 and small chips which do not adversely affect the protection against electric shock are neglected.

Cracks not visible with normal or corrected vision without magnification and surface cracks in fibre-reinforced mouldings and the like are ignored.

International Electrotechnical Commission
Provided by IHS under license with IEC
No reproduction or networking permitted without license from IHS

Cracks or holes in the outer surface of any part of the switch are ignored if the switch complies with this document even if this part is omitted. If a decorative cover is backed by an inner cover, fracture of the decorative cover is neglected if the inner cover withstands the test after removal of the decorative cover.

20.3 Test on the main parts of surface-type switches

The main parts of surface-type switches are first fixed to a cylinder of rigid steel sheet, which has a radius equal to 4,5 times the distance between fixing holes but in any case no less than 200 mm. The axes of the holes are in a plane perpendicular to the axis of the cylinder and parallel to the radius through the centre of the distance between the holes.

The fixing screws of the main part are gradually tightened, the maximum torque applied being 0,5 Nm for screws with a thread diameter up to and including 3 mm and 1,2 Nm for screws with a larger thread diameter.

The main parts are then fixed in a similar manner to a flat steel sheet.

During and after the tests the main parts of the switch shall show no damage likely to impair their future use.

20.4 Screwed glands

Screwed glands are fitted with a cylindrical metal rod having a diameter, in millimetres, equal to the nearest whole number below the internal diameter, in millimetres, of the packing.

The glands are then tightened by means of a suitable spanner, the torque shown in Table 22 being applied to the spanner for 1 min.

Table 22 – Torque for the verification of the mechanical strength of glands

Diameter of test rod mm	Torque Nm	
	Metal glands	Glands of moulded material
Up to and including 14	6,25	3,75
Above 14 and up to and including 20	7,5	5,0
Above 20	10,0	7,5

After the test, the glands and the enclosures of the specimens shall show no damage within the meaning of this document.

20.5 Covers, cover plates or actuating members – accessibility to live parts

20.5.1 General

When testing the force necessary for covers, cover plates or actuating members to come off or not come off, the switches are mounted as for normal use. Flush-type switches are fixed in appropriate mounting boxes, which are installed as for normal use so that the rims of the boxes are flush with the walls, and the covers, cover plates or actuating members are fitted. If they are provided with locking means which can be operated without the aid of a tool, these means are unlocked.

Compliance is then checked by the tests of 20.5.2 and 20.5.3.

International Electrotechnical Commission
Provided by IHS under license with IEC
No reproduction or networking permitted without license from IHS

20.5.2 Verification of the non-removal of covers, cover plates or actuating members

Forces are gradually applied in directions perpendicular to the mounting surfaces, in such a way that the resulting force acting on the centre of the covers, cover plates, actuating members or parts of them is

- *40 N, for covers, cover plates, actuating members or parts of them complying with the tests of 20.8 and 20.9; or*
- *80 N, for other covers, cover plates, actuating members or parts of them.*

The force is applied for 1 min. The covers, cover plates, or actuating members shall not come off.

The test is then repeated on new specimens, the cover or cover plate being fitted on the wall after a sheet of hard material, 1 mm ± 0,1 mm thick, has been fitted around the supporting frame, as shown in Figure 13.

NOTE The sheet of hard material is used to simulate wallpaper and can consist of a number of pieces.

After the test the specimens shall show no damage within the meaning of this document.

20.5.3 Verification of the removal of covers, cover plates or actuating members

A force not exceeding 120 N is gradually applied, in directions perpendicular to the mounting/supporting surfaces, to covers, cover plates, actuating members or parts of them by means of a hook placed in turn in each of the grooves, holes, spaces or the like provided for removing them.

The covers, cover plates or actuating members shall come off.

The test is made 10 times on each separable part the fixing of which is not dependent on screws (the application points being equally distributed as far as practicable). The removal force is applied each time to the different grooves, holes or the like provided for removing the separable part.

The test is then repeated on new specimens, the cover, cover plate, or actuating member being fitted on the wall after a sheet of hard material, (1 ± 0,1) mm thick has been fitted around the supporting frame, as shown in Figure 13.

After the test, the specimens shall show no damage within the meaning of this document.

20.6 Covers, cover plates or actuating members – accessibility to non-earthed metal parts separated from live parts

The test is made as described in 20.5, but applying, for 20.5.2, the following forces:

- *10 N, for covers or cover plates or actuating members complying with the tests of 20.8 and 20.9;*
- *20 N, for other covers or cover plates or actuating members.*

20.7 Covers, cover plates or actuating members – accessibility to insulating parts, earthed metal parts, the live parts of SELV ≤ 25 V AC or metal parts separated from live parts

The test is made as described in 20.5, but applying, for 20.5.2, the force of 10 N for all covers, cover plates, or actuating members.

International Electrotechnical Commission
Provided by IHS under license with IEC
No reproduction or networking permitted without license from IHS

20.8 Covers, cover plates or actuating members – application of gauges

The gauge shown in Figure 14 is pushed toward each side of each cover, cover plate or actuating member which is fixed without screws on a mounting or supporting surface, as shown in Figure 15. With face B resting on the mounting/supporting surface, and face A perpendicular to it, the gauge is applied at right angles to each side under test.

In the case of a cover or cover plate fixed without screws to another cover or cover plate or to a mounting box, having the same outline dimensions, face B of the gauge shall be placed at the same level as the junction; the outline at the cover or cover plate shall not exceed the outline of the supporting surface.

The distances between face C of the gauge and the outline of the side under test, measured parallel to face B, shall not decrease (with the exception of grooves, holes, reverse tapers or the like, placed less than 7 mm from a plane including face B and complying with the test of 20.9) when measurements are repeated starting from point x in the direction of the arrow y (see Figure 16).

20.9 Grooves, holes and reverse tapers

A gauge according to Figure 17, applied with a force of 1 N, shall not enter more than 1,0 mm from the upper part of any groove, hole or reverse taper or the like when the gauge is applied parallel to the mounting/supporting surface and at right angles to the part under test, as shown in Figure 18.

NOTE The verification whether the gauge according to Figure 17 has entered more than 1,0 mm is made with reference to a surface perpendicular to face B and including the upper part of the outline of the grooves, holes, reverse tapers or the like.

20.10 Additional test for cord-operated switch

The operating member of a cord-operated switch shall have adequate strength.

Compliance is checked on a new specimen by the following test:

The switch is mounted on a support as in normal use.

A pull of 100 N is applied for 1 min on the operating member as in normal use, after which a pull of 50 N is applied for 1 min in the most unfavourable direction within a conical surface with the centre being the operating cord and the angle not exceeding 80° to the vertical.

After the test the switch shall show no damage within the meaning of this document. The operating member shall not have broken and the cord-operated switch shall still operate.

21 Resistance to heat

21.1 General

Switches and boxes shall be sufficiently resistant to heat.

Parts intended for decorative purposes only, such as certain lids, shall be removed if possible and these parts are not subjected to the test.

Compliance is checked

a) for surface mounting boxes, separable covers, separable cover plates and separable frames by the test of 21.4;

International Electrotechnical Commission
Provided by IHS under license with IEC
No reproduction or networking permitted without license from IHS

b) for switches, with the exception of the parts, if any, covered by a), by the tests of 21.2, 21.3 and, with the exception of the switches made from natural or synthetic rubber or a mixture of both, by the test of 21.4.

21.2 Basic heating test

The specimens are kept for 1 h in a heating cabinet at a temperature of (+100 ± 2) °C.

During the test, they shall not undergo any change impairing their further use and sealing compound, if any, shall not flow to such an extent that live parts are exposed.

After the test and after the specimens have been allowed to cool down to approximately room temperature, there shall be no access to live parts which are normally not accessible when the specimens are mounted as in normal use, even if the test probe B of IEC 61032 is applied with a force not exceeding 5 N.

After the test, markings shall still be legible.

Discoloration, blisters or slight displacement of the sealing compound is disregarded provided that safety is not impaired within the meaning of this document.

21.3 Ball-pressure test on parts of insulating material necessary to retain current-carrying parts and parts of the earthing circuit in position

Parts of insulating material necessary to retain current-carrying parts and parts of the earthing circuit in position are subjected to a ball-pressure test by means of the apparatus shown in Figure 19, except for the insulating parts necessary to retain the earthing terminals in a box, which shall be tested as specified in 21.4.

When it is not possible to carry out the test on the specimens, the test shall be carried out on a piece at least 2 mm thick which is cut out of a new set of aged specimens. If this is not possible, up to and including four layers, each cut out of the same specimen, should be used, in which case the total thickness of the layers shall be not less than 2,5 mm.

The surface of the part to be tested is placed in the horizontal position and a steel ball of 5 mm diameter is pressed against the surface with a force of 20 N.

The test load and the supporting means shall be placed within the heating cabinet for a sufficient time to ensure that they have attained the stabilized testing temperature before the test commences.

The test is made in a heating cabinet at a temperature of (+125 ± 2) °C.

After 1 h, the ball is removed from the specimen, which is then cooled down within 10 s to approximately room temperature by immersion in cold water.

The diameter of the impression caused by the ball is measured and shall not exceed 2 mm.

21.4 Ball-pressure test on parts of insulating material not necessary to retain current-carrying parts and parts of the earthing circuit in position

Parts of insulating material not necessary to retain current-carrying parts and parts of the earthing circuit in position, even though they are in contact with them, are subjected to a ball pressure test in accordance with 21.3, but the test is made at a temperature of (+70 ± 2) °C or (+40 ± 2) °C plus the highest temperature rise determined for the relevant part during the test of Clause 17, whichever is the higher.

International Electrotechnical Commission
Provided by IHS under license with IEC
No reproduction or networking permitted without license from IHS

22 Screws, current-carrying parts and connections

22.1 General

Connections, electrical or mechanical, shall withstand the mechanical stresses occurring in normal use.

Mechanical connections to be used during installation of accessories may be made using thread-forming screws or thread-cutting screws only when the screws are supplied together with the piece in which they are intended to be inserted. In addition, thread-cutting screws intended to be used during installation shall be captive with the relevant part of the accessory.

Screws or nuts which transmit contact pressure shall be of metal and shall be in engagement with a metal thread.

Compliance is checked by inspection and, for screws and nuts which are operated when connecting the external conductors and mounting the switch during the installation, by the following test.

NOTE 1 The requirements for the verification of terminals are given in Clause 12.

The screws or nuts are tightened and loosened

- *10 times for screws in engagement with a thread of insulating material;*
- *5 times in all other cases.*

The screws or nuts in engagement with a thread of insulating material are completely removed and reinserted each time.

The test is made by means of a suitable test screwdriver or a suitable tool, applying the relevant torque as specified in 12.2.5.

The conductor is moved each time the screw or nut is loosened.

During the test, no damage impairing the further use of the screwed connections shall occur, such as breakage of screws or damage to the head slots (rendering the use of an appropriate screwdriver impossible), threads, washers or stirrups.

NOTE 2 Screws or nuts which are operated when assembling the switch include screws for fixing covers or cover plates, etc., but not connecting means for screwed conduits and screws for fixing the main part of a switch.

The shape of the blade of the test screwdriver shall suit the head of the screw to be tested.

The screws and nuts shall be tightened in one smooth and continuous motion.

NOTE 3 Screwed connections are considered as partially checked by the tests of Clauses 19 and 20.

22.2 Correct insertion of screws

For screws in engagement with a thread of insulating material which are operated when mounting the switch during installation, their correct introduction into the screw hole or nut shall be ensured.

Compliance is checked by inspection.

NOTE The requirement with regard to correct introduction is met if introduction of the screw in a slanting manner is prevented, for example, by guiding the screw by the parts to be fixed, by a recess in the female thread or by the use of a screw with the leading thread removed.

International Electrotechnical Commission
Provided by IHS under license with IEC
No reproduction or networking permitted without license from IHS

22.3 Contact pressure of electrical connections

Electrical connections shall be so designed that contact pressure is not transmitted through insulating material other than ceramic, pure mica or other material with characteristics no less suitable, unless there is sufficient resiliency in the metallic parts to compensate for any possible shrinkage or yielding of the insulating material.

Compliance is checked by inspection and by manual test.

NOTE The suitability of the material is considered in respect of the stability of the dimensions.

22.4 Screws and rivets used both as electrical and mechanical connections

Screws and rivets which serve as electrical as well as mechanical connections shall be locked against loosening and/or turning.

Compliance is checked by inspection.

NOTE 1 Spring washers can provide satisfactory locking.

NOTE 2 For rivets, a non-circular shank or an appropriate notch can be sufficient.

NOTE 3 Sealing compound which softens on heating provides satisfactory locking only for screw connections not subjected to torsion in normal use.

22.5 Material of current-carrying parts

Current-carrying parts, including those of terminals (also earthing terminals), shall be of a metal having, under the conditions occurring in the accessory, mechanical strength, electrical conductivity and resistance to corrosion adequate for their intended use.

The requirement of 22.5 does not apply to screws, nuts, washers, clamping plates and similar parts of terminals.

Compliance is checked by inspection and, if necessary, by chemical analysis.

Examples of suitable metals, when used within the permissible temperature range and under normal conditions of chemical pollution, are

- copper;
- an alloy containing at least 58 % copper for parts made from cold-rolled sheet or at least 50 % copper for other parts;
- stainless steel containing at least 13 % chromium and not more than 0,09 % carbon;
- steel provided with an electroplated coating of zinc according to ISO 2081, the coating having a thickness of at least
  - 5 μm, service condition ISO No. 1, for switches that have an IP code IPX0;
  - 12 μm, service condition ISO No. 2, for switches that have an IP code IPX4;
  - 25 μm, service condition ISO No. 3, for switches that have an IP code IPX5 or IPX6.
- steel provided with an electroplated coating of nickel and chromium according to ISO 1456, the coating having a thickness of at least
  - 20 μm, service condition ISO No. 2, for switches that have an IP code IPX0;
  - 30 μm, service condition ISO No. 3, for switches that have an IP code IPX4;
  - 40 μm, service condition ISO No. 4, for switches that have an IP code IPX5 or IPX6.
- steel provided with an electroplated coating of tin according to ISO 2093, the coating having a thickness of at least
  - 12 μm, service condition ISO No. 2, for switches that have an IP code IPX0;

International Electrotechnical Commission
Provided by IHS under license with IEC
No reproduction or networking permitted without license from IHS

- 20 μm, service condition ISO No. 3, for switches that have an IP code IPX4;
- 30 μm, service condition ISO No. 4, for switches that have an IP code IPX5 or IPX6.

Current-carrying parts which may be subjected to mechanical wear shall not be made of steel provided with an electroplated coating.

Under moist conditions metals showing a great difference of electrochemical potential with respect to each other shall not be used in contact with each other.

Compliance is checked by a test which is under consideration.

22.6 Contacts subjected to sliding actions

Contacts which are subjected to a sliding action in normal use shall be of a metal resistant to corrosion.

Compliance with the requirements of 22.5 and 22.6 is checked by inspection and, in case of doubt, by chemical analysis.

22.7 Thread-forming and thread-cutting screws

Thread-forming screws and thread-cutting screws shall not be used for the connection of current-carrying parts. Thread-forming screws and thread-cutting screws may be used to provide earthing continuity, provided that it is not necessary to disturb the connection in normal use and at least two screws are used for each connection.

Compliance is checked by inspection.

23 Creepage distances, clearances and distances through sealing compound

23.1 General

Creepage distances, clearances and distances through sealing compound shall be not less than the values shown in Table 23.

Subclause 23.1 does not apply to pilot light units. Requirements for pilot light units are given in 13.16.

International Electrotechnical Commission
Provided by IHS under license with IEC
No reproduction or networking permitted without license from IHS

Table 23 – Creepage distances, clearances and distances through insulating sealing compound

	Description	mm		
		normal gap	**mini -gap**	**micro-gap**
Creepage distances				
1	Between internal live parts which are separated when the contacts are open.	3	3[a]	3[a]
2	Between live parts of different polarity including all terminals for external wiring.	4[c, e]	4[c, e]	4[c, e]
3	Between live parts and			
	– accessible surfaces of parts of insulating material;	3	3	3
	– earthed metal parts, including the earthing circuit;	3	3	3
	– metal frames supporting the base of flush-type switches;	3	3	3
	– screws or devices for fixing main parts, covers or cover-plates;	3	3	3
	– metal parts of the mechanism, if required to be insulated from live parts (see 10.4).	3	3	3
4	Between metal parts of the mechanism, if required to be insulated from accessible metal parts (see 10.5), and			
	– screws or devices for fixing main parts, covers or cover-plates;	3	3	3
	– metal frames supporting the base of flush-type switches;	3	3	3
	– accessible metal parts.	3	3	3
5	Between live parts and accessible unearthed metal parts, with the exception of screws and the like.	6[d]	6[d]	6[d]
Clearances				
6	Between internal live parts which are separated when the contacts are open.	3	1,2[b]	< 1,2[b]
7	Between live parts of different polarity including all terminals for external wiring.	3[e]	3[e]	3[e]
8	Between live parts and			
	– accessible surfaces of insulating material;	3	3	3
	– earthed metal parts, including the earthing circuit, not mentioned under items 9 and 11;	3	3	3
	– metal frames supporting the base of flush-type switches;	3	3	3
	– screws or devices for fixing main parts, covers, or cover-plates;	3	3	3
	– metal parts of the mechanism, if required to be insulated from live parts (see 10.4).	3	3	3
9	Between live parts and			
	– exclusively earthed metal boxes (see NOTE) with the switch mounted in the most unfavourable position;	3	3	3
	– unearthed metal boxes, without insulating lining, with the switch mounted in the most unfavourable position.	4,5	4,5	4,5
10	Between metal parts of the mechanism, if required to be insulated from accessible metal parts (see 10.5), and			
	– screws or devices for fixing main parts, covers or cover-plates;	3	3	3
	– metal frames supporting the base of flush-type switches;	3	3	3
	– accessible metal parts when the base is fixed directly on the wall.	3	3	3
11	Between live parts and the surface on which the base of a surface-type switch is mounted when the base is fixed directly on the wall.	6	6	6
12	Between live parts and the bottom of the space, if any, for external conductors, for surface-type switches.	3	3	3
13	Between live parts and accessible unearthed metal parts with the exception of screws and the like.	6[d]	6[d]	6[d]
Distances through insulating sealing compound				

International Electrotechnical Commission
Provided by IHS under license with IEC
No reproduction or networking permitted without license from IHS

Description		mm		
		normal gap	**mini -gap**	**micro-gap**
14	Between live parts covered with at least 2 mm of sealing compound and the surface on which the base of a surface-type switch is mounted.	4[c]	4[c]	4[c]
15	Between live parts covered with at least 2 mm of sealing compound and the bottom of the space, if any, for external conductors, for surface-type switches.	2,5	2,5	2,5
NOTE Exclusively earthed metal boxes are those suitable only for use in installations where earthing of metal boxes is required.				
[a] For switches with rated voltage up to and including 250 V the creepage distances may be reduced to 1,2 mm if the insulating material has at least a comparative tracking index (CTI) value of 600 according to IEC 60112 or to 1,8 mm if the insulating material has at least a CTI value of 400 according to IEC 60112. [b] The clearances between internal live parts shall be greater than the switch contact gap. [c] The 4 mm value is reduced to 3 mm for switches having a rated voltage up to and including 250 V. [d] The 6 mm value is reduced to 4,5 mm for accessories having a rated voltage up to and including 250 V. [e] Clearances and creepage distances between live parts of different polarity are reduced to 1 mm between the lead wires in the pinch of a neon lamp or an LED with external resistor.				

Compliance is checked by measurement.

The measurements are made on the switch fitted with conductors of the largest cross-sectional area specified in Clause 12, and also without conductors.

Distances through slots or openings in external parts of insulating material are measured to metal foil in contact with the accessible surface; the foil is pushed into corners and the like by means of the test probe B of IEC 61032, but is not pressed into openings.

The conductor shall be inserted into the terminal and so connected that the core insulation touches the metal part of the clamping unit or, if the core insulation is prevented by construction from touching the metal part, the outside of the obstruction.

For surface-type switches that have an IP code IP 20, the most unfavourable conduit or cable is introduced for a distance of 1 mm into the switch, in accordance with 13.12.

If the metal frame supporting the main part of flush-type switches is movable, this frame is placed in the most unfavourable position.

Any metal part in contact with a metal part of the mechanism is considered to be a metal part of the mechanism.

In double-break switches, the creepage distance mentioned under item 1 in Table 23 or the clearance mentioned under item 6 in Table 23 is the sum of the creepage distance or clearance between one fixed contact and the moving part, and that between the moving part and the other fixed contact.

The contribution to the creepage distance of any groove less than 1 mm wide is limited to its width.

Any air-gap less than 1 mm is ignored in computing the total clearance.

NOTE The surface on which the base of a switch for surface mounting is mounted includes any surface in contact with the base when the switch is installed. If the base is provided with a metal plate at the back, this plate is not regarded as the mounting surface.

International Electrotechnical Commission
Provided by IHS under license with IEC
No reproduction or networking permitted without license from IHS

23.2 Insulating compound

Insulating compound shall not protrude above the edge of the cavity in which it is contained.

Compliance is checked by inspection.

24 Resistance of insulating material to abnormal heat, to fire and to tracking

24.1 Resistance to abnormal heat and to fire

Parts of insulating material which might be exposed to thermal stresses due to electric effects, and the deterioration of which might impair the safety of the accessory, shall not be unduly affected by abnormal heat and by fire.

Compliance is checked by performing the glow-wire test according to IEC 60695-2-10 and IEC 60695-2-11 under the following conditions:

a) for parts made of insulating material necessary to retain current-carrying parts and parts of the earthing circuit in position, by the test made at a temperature of 850 °C, with the exception of parts of insulating material needed to retain the earth terminal in position in a box, which shall be tested at a temperature of 650 °C;

b) for parts of insulating material not necessary to retain current-carrying parts and parts of the earthing circuit in position, even though they are in contact with them, by the test made at a temperature of 650 °C.

A current-carrying part or a part of the earthing circuit retained by mechanical means is considered to be retained in position. The use of grease or the like is not considered to be mechanical means.

External conductors cannot be considered as retaining the current-carrying parts.

In case of doubt, to determine whether an insulating material is necessary to retain current-carrying parts and parts of the earthing circuit in position, the device is examined without conductors while held in positions most likely to cause displacement of the current-carrying parts or parts of the earthing circuit with the insulating material in question removed.

If the tests specified have to be made at more than one place on the same switch, care should be taken to ensure that any deterioration caused by previous tests does not affect the result of the test to be made.

Small parts, where each surface lies completely within a circle of 15 mm in diameter, or where any part of the surface lies outside a 15 mm diameter circle and it is not possible to fit a circle of 8 mm in diameter on any of the surfaces, are not subjected to the test of 24.1 (see Figure 20 for diagrammatic representation).

NOTE 1 When checking a surface, projections on the surfaces and holes which are not greater than 2 mm on the largest dimension are disregarded.

The tests are not made on parts of ceramic material.

NOTE 2 The glow-wire test is applied to ensure that an electrically heated test wire under defined test conditions does not cause ignition of insulating parts or to ensure that a part of insulating material which might be ignited by the heated test wire under defined conditions has a limited time to burn without spreading fire by flame or burning parts or droplets from the tested part falling down onto the pinewood board covered with tissue paper.

If possible, the specimen should be a complete switch.

NOTE 3 If the test cannot be made on a complete switch, a suitable part can be cut from it for the purpose of the test.

International Electrotechnical Commission
Provided by IHS under license with IEC
No reproduction or networking permitted without license from IHS

The test is made on one specimen. In case of doubt, the test shall be repeated on two further specimens.

The specimen shall be stored for 24 h at standard ambient atmospheric conditions before the test, in accordance with IEC 60212.

The test is made applying the glow-wire once.

The specimen shall be positioned during the test in the most unfavourable position of its intended use (with the surface tested in a vertical position). The tip of the glow-wire shall be applied to the specified surface of the specimen taking into account the conditions of the intended use under which a heated or glowing element may come into contact with the switch.

During the application time of the glow-wire and during a period of 30 s from the end of the application time, the specimen and the surrounding parts, including the layer under the specimen, shall be observed.

The time when the ignition of the specimen occurs and/or the time when the flames extinguish during or after the application time shall be measured and recorded.

The switch is regarded as having passed the glow-wire test if one of the following conditions is met:

- *there is no visible flame and sustained glowing;*
- *flames and glowing at the switch extinguish within 30 s after the removal of the glow-wire.*

There shall be no ignition of the wrapping tissue or scorching of the board.

24.2 Resistance to tracking

For switches that have an IP code higher than IPX0, parts of insulating material retaining live parts in position shall be of material resistant to tracking.

Compliance is checked according to IEC 60112.

Ceramic parts are not tested.

A flat surface of the part to be tested at least 15 mm × 15 mm is placed in the horizontal position on the apparatus.

The material under test shall pass a proof tracking index of 175 V using the solution A with an interval between drops of (30 ± 5) s.

No flashover or breakdown between electrodes shall occur before a total of 50 drops have fallen.

25 Resistance to rusting

Ferrous parts, including covers and boxes, shall be adequately protected against rusting.

Compliance is checked by the following test:

All grease is removed from the parts to be tested, using a suitable degreasing agent.

The parts are then immersed for 10 min in a 10 % solution of ammonium chloride in water at a temperature of (+20 ± 5) °C.

International Electrotechnical Commission
Provided by IHS under license with IEC
No reproduction or networking permitted without license from IHS

Without drying, but after shaking off any drops, the parts are placed for 10 min in a box containing air saturated with moisture at a temperature of (+20 ± 5) °C.

After the parts have been dried for 10 min in a heating cabinet at a temperature of (+100 ± 5) °C, their surfaces shall show no signs of rust.

NOTE 1 Traces of rust on sharp edges and any yellowish film removable by rubbing is ignored.

NOTE 2 For small springs and the like, and for inaccessible parts exposed to abrasion, a layer of grease can provide sufficient protection against rusting. Such parts are subjected to the test only if there is doubt about the effectiveness of the grease film, and the test is then made without previous removal of the grease.

26 EMC requirements

26.1 Immunity

Switches within the scope of this document are tolerant of electromagnetic disturbances and therefore no immunity tests are necessary.

26.2 Emission

Electromagnetic disturbances may only be generated during switching operations. Since this is not continuous, no emission tests are necessary.

International Electrotechnical Commission
Provided by IHS under license with IEC
No reproduction or networking permitted without license from IHS

Dimensions in millimetres

Screw not requiring washer, clamping plate or anti-spread device

Screw requiring washer, clamping plate or anti-spread device

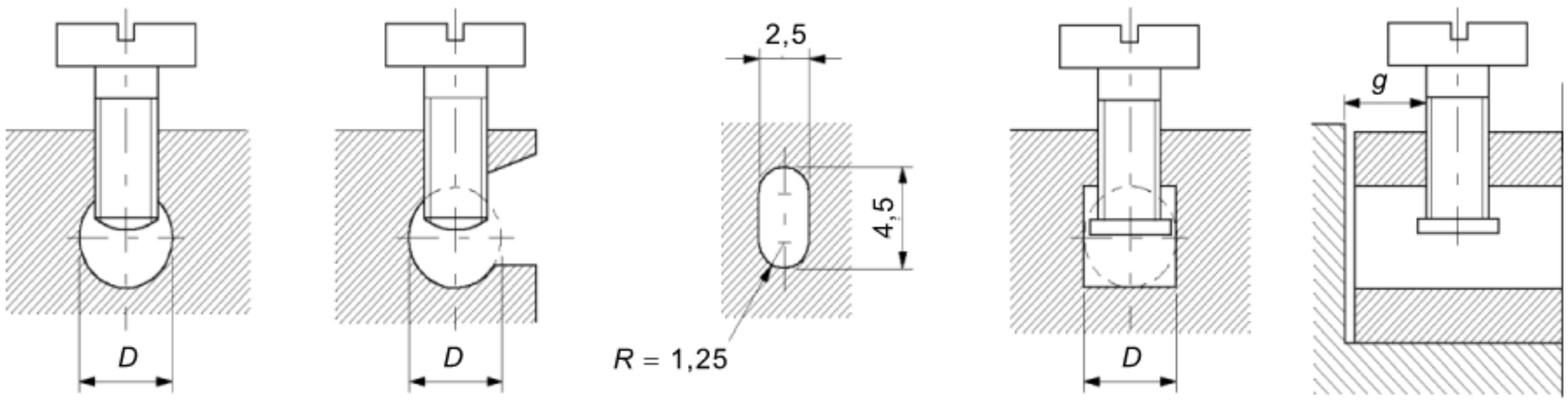

Terminals without pressure plate

Elongated hole terminal

Terminals with pressure plate

IEC

Cross-section of conductor accepted by the terminal mm^2	Minimum diameter *D* (or minimum dimensions) of conductor space mm	Minimum distance *g* between clamping screw and end of conductor when fully inserted mm		Torque Nm					
				1[a]		3[a]		4[a]	
		One screw	Two screws	One screw	Two screws	One screw	Two screws	One screw	Two screws
Up to 1,5	2,5	1,5	1,5	0,2	0,2	0,2	0,4	0,4	0,4
2,5 (circular hole)	3,0	1,5	1,5	0,25	0,2	0,5	0,4	0,5	0,4
2,5 (elongated hole)	2,5 × 4,5	1,5	1,5	0,25	0,2	0,5	0,4	0,5	0,4
4	3,6	1,8	1,5	0,4	0,2	0,8	0,4	0,7	0,4
6	4,0	1,8	1,5	0,4	0,25	0,8	0,5	0,8	0,5
10	4,5	2,0	1,5	0,7	0,25	1,2	0,5	1,2	0,5
16	5,5	2,5	2,0	0,8	0,7	2,0	1,2	2,0	1,2
25	7,0	3,0	2,0	1,2	0,7	2,5	1,2	3,0	1,2

[a] The values specified apply to the screws covered by the corresponding columns in Table 5.

The part of the terminal containing the threaded hole and the part of the terminal against which the conductor is clamped by the screw may be two separate parts, as in the case of terminals provided with a stirrup.

The shape of the conductor space may differ from those shown provided that a circle with a diameter equal to the minimum specified for *D* or the minimum outline specified for the elongated hole accepting cross-sections of conductors up to 2,5 mm^2 can be inscribed.

Figure 1 – Pillar terminals

International Electrotechnical Commission
Provided by IHS under license with IEC
No reproduction or networking permitted without license from IHS

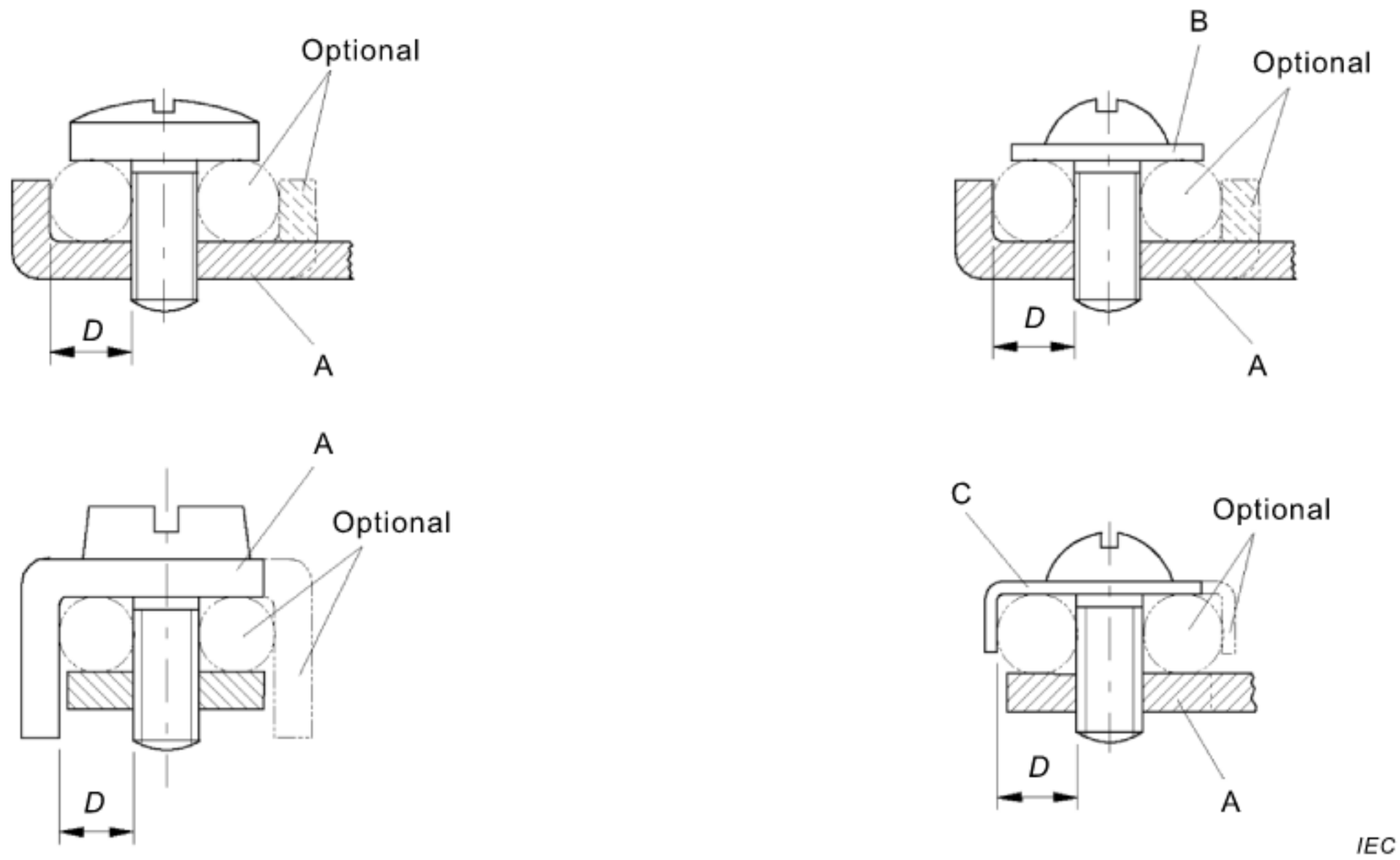

Screw head terminals

Stud terminals

A fixed part

B washer or clamping plate

C anti-spread device

D conductor space

E stud

Cross-section of conductor accepted by the terminal	**Minimum diameter *D* of conductor space**	**Torque** Nm			
		3[a]		**4[a]**	
mm²	mm	**One screw**	**Two screws**	**One screw or stud**	**Two screws or studs**
Up to 1,5	1,7	0,5	–	0,5	–
Up to 2,5	2,0	0,8	–	0,8	–
Up to 4	2,7	1,2	0,5	1,2	0,5
Up to 6	3,6	2,0	1,2	2,0	1,2
Up to 10	4,3	2,0	1,2	2,0	1,2
Up to 16	5,5	2,0	1,2	2,0	1,2
Up to 25	7,0	2,5	2,0	3,0	2,0

[a] The values specified apply to the screws covered by the corresponding columns in Table 5.

International Electrotechnical Commission
Provided by IHS under license with IEC
No reproduction or networking permitted without license from IHS

The part which retains the conductor in position may be of insulating material provided the pressure necessary to clamp the conductor is not transmitted through the insulating material.

The second optional space for the terminal accepting cross-sections of conductors up to 2,5 mm^2 may be used for the connection of the second conductor, when it is required to connect two 2,5 mm^2 conductors.

Figure 2 – Screw head terminals and stud terminals

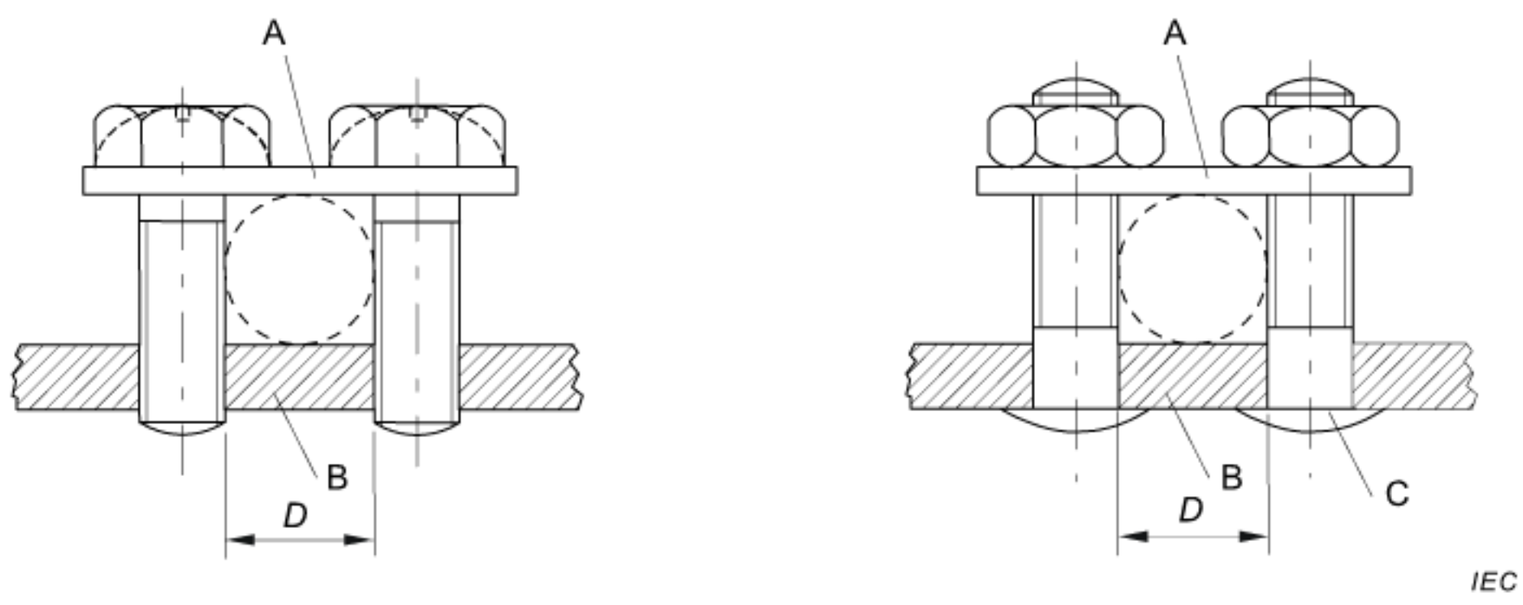

A saddle

B fixed part

C stud

D conductor space

Cross-section of conductor accepted by the terminal mm^2	Minimum diameter *D* of conductor space mm	Torque Nm
Up to 4	3,0	0,5
Up to 6	4,0	0,8
Up to 10	4,5	1,2
Up to 16	5,5	1,2
Up to 25	7,0	2,0

The shape of the conductor space may differ from that shown in the figure, provided that a circle with a diameter equal to the minimum value specified for *D* can be inscribed.

The shape of the upper and lower faces of the saddle may be different to accommodate conductors of either small or large cross-sectional areas by inverting the saddle.

Figure 3 – Saddle terminals

International Electrotechnical Commission
Provided by IHS under license with IEC
No reproduction or networking permitted without license from IHS

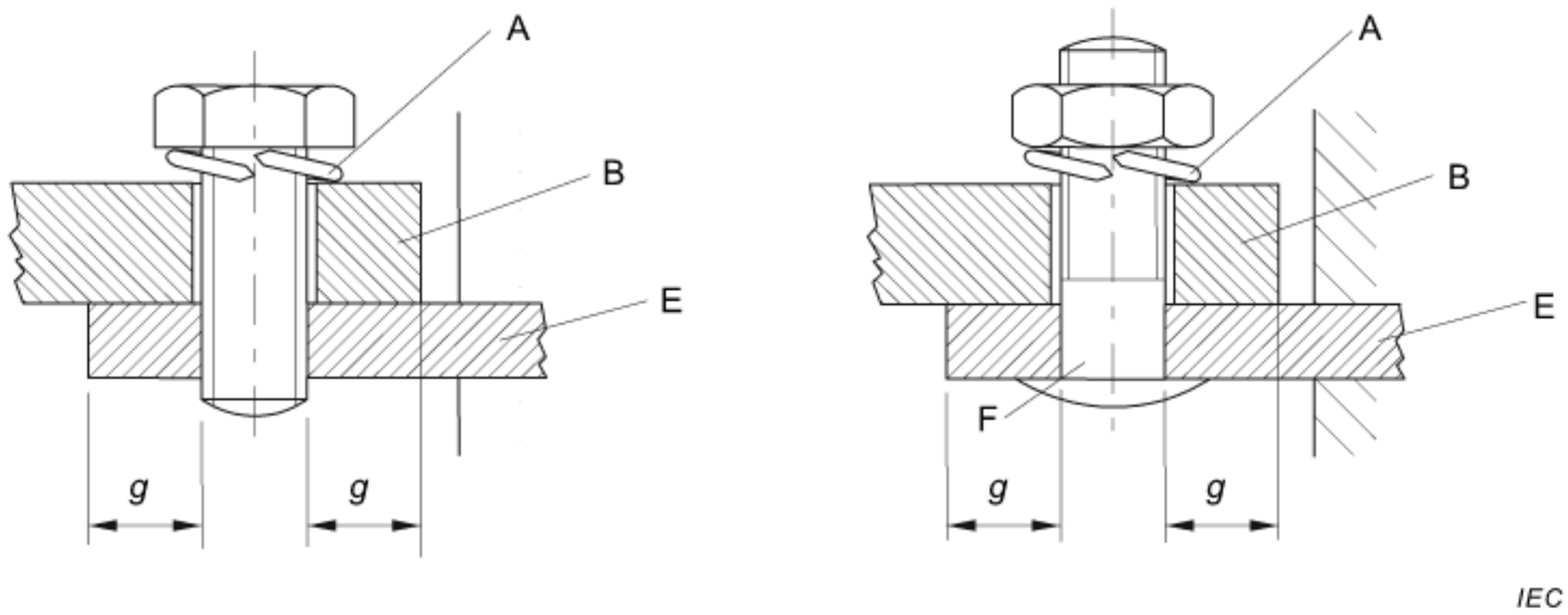

A locking means

B cable lug or bar

E fixed part

F stud

Cross-section of conductor accepted by the terminal mm²	Minimum distance *g* between edge of hole and side of clamping area mm	Torque Nm	
		3[a]	4[a]
Up to 16	7,5	2,0	2,0
Up to 25	9,0	2,5	3,0
[a] The values specified apply to the screws covered by the corresponding columns in Table 5.			

For this type of terminal, a spring washer or equally effective locking means shall be provided and the surface within the clamping area shall be smooth.

For certain types of switches, the use of lug terminals of sizes smaller than that specified is allowed.

Figure 4 – Lug terminals

International Electrotechnical Commission
Provided by IHS under license with IEC
No reproduction or networking permitted without license from IHS

A fixed part

D conductor space[a]

Cross-section of conductor accepted by the terminal mm²	Minimum diameter *D* of conductor space[a] mm	Minimum distance between fixed part and end of conductor when fully inserted mm
Up to 1,5	1,7	1,5
Up to 2,5	2,0	1,5
Up to 4	2,7	1,8
Up to 6	3,6	1,8
Up to 10	4,3	2,0
Up to 16	5,5	2,5
Up to 25	7,0	3,0

[a] The bottom of the conductor space shall be slightly rounded in order to obtain a reliable connection.

The value of the torque to be applied is that specified in column 2 or 4 of Table 5, as appropriate.

Figure 5 – Mantle terminals

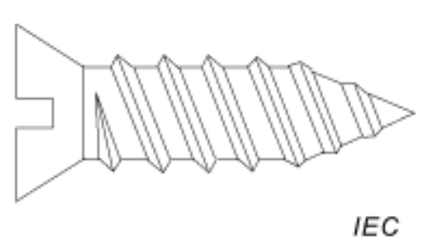

Figure 6 – Thread-forming screw

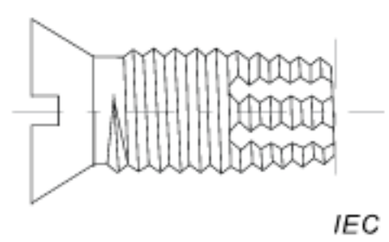

Figure 7 – Thread-cutting screw

International Electrotechnical Commission
Provided by IHS under license with IEC
No reproduction or networking permitted without license from IHS

Pattern number	Number of poles	Possible connections	Pattern number	Number of poles	Possible connections
1	1		5	1	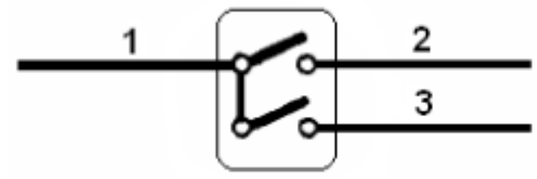
2	2	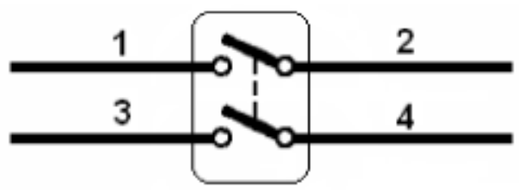	6	1	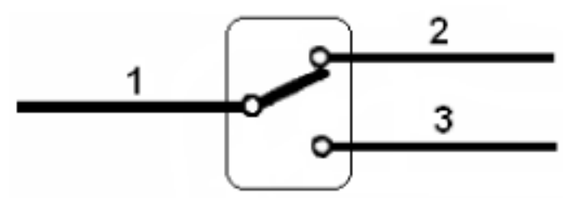
3	3	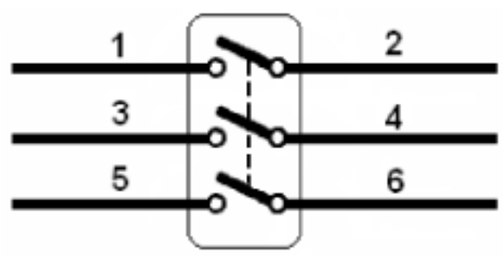			
03	4	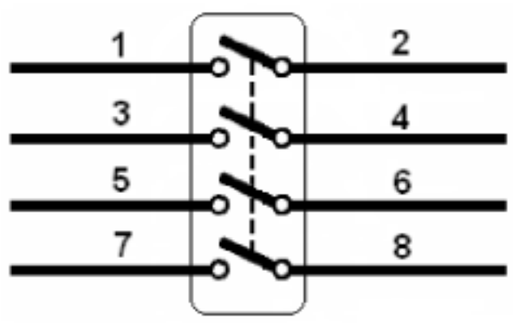	6/2	2	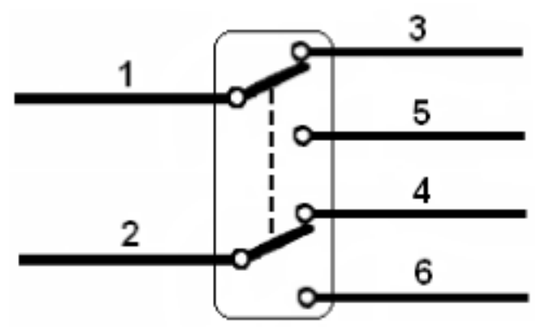
4	1	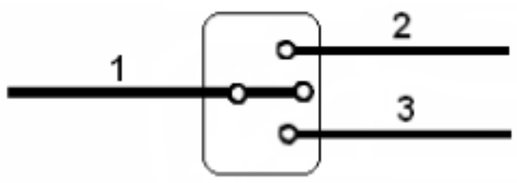	7	1	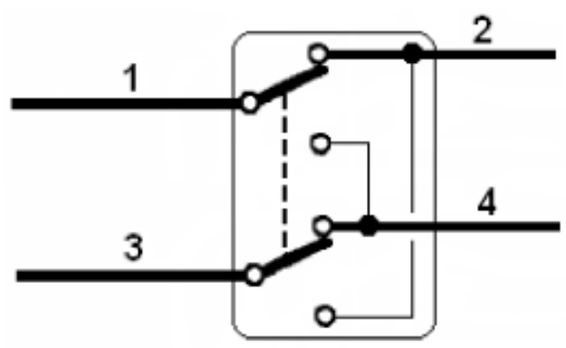

IEC

The figures indicating the terminals are given for test purposes only and are not those required to be marked.

Figure 8 – Classification according to connections

International Electrotechnical Commission
Provided by IHS under license with IEC
No reproduction or networking permitted without license from IHS

Dimensions in millimetres

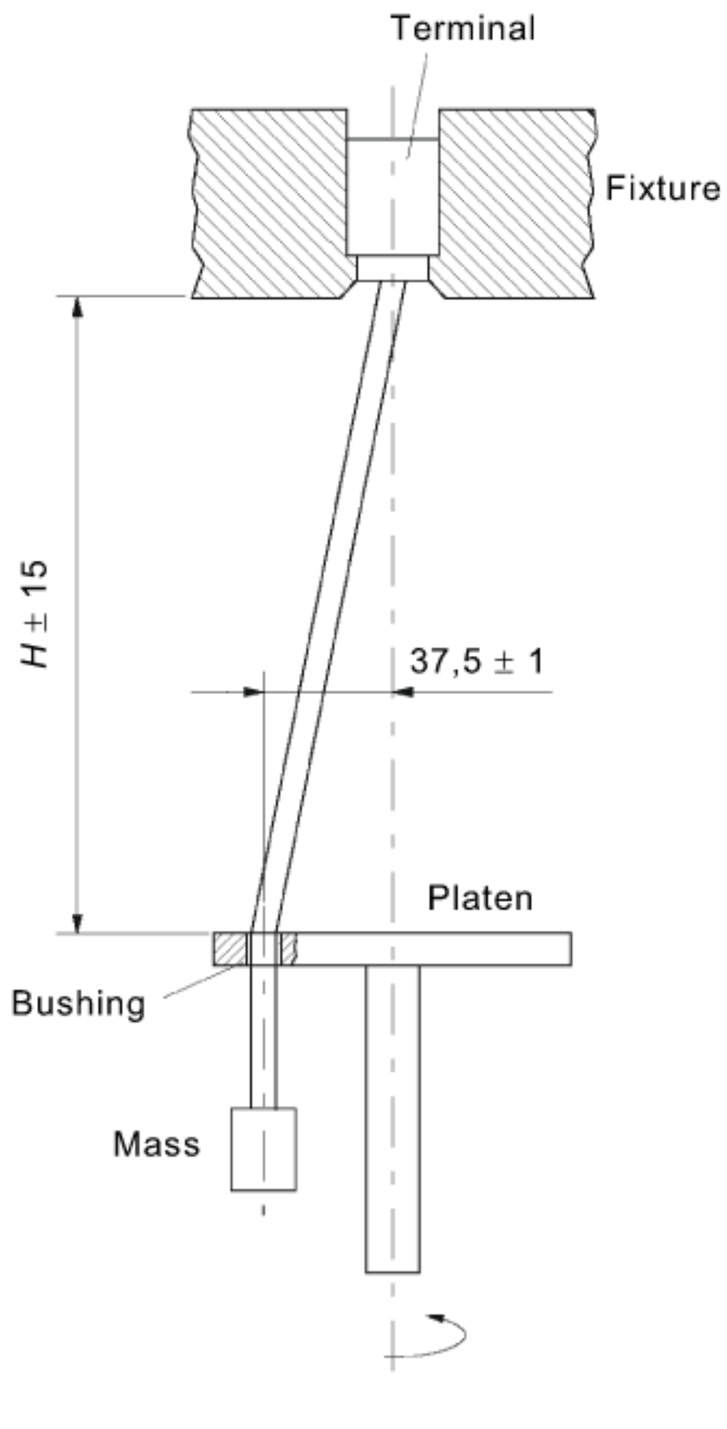

NOTE The bushing hole is made in a way which ensures that the force extended to the cable is a pure pulling force and that the transmission of any torque to the connection in the clamping means is avoided.

Figure 9 – Test apparatus for checking damage to conductors

International Electrotechnical Commission
Provided by IHS under license with IEC
No reproduction or networking permitted without license from IHS

Dimensions in millimetres

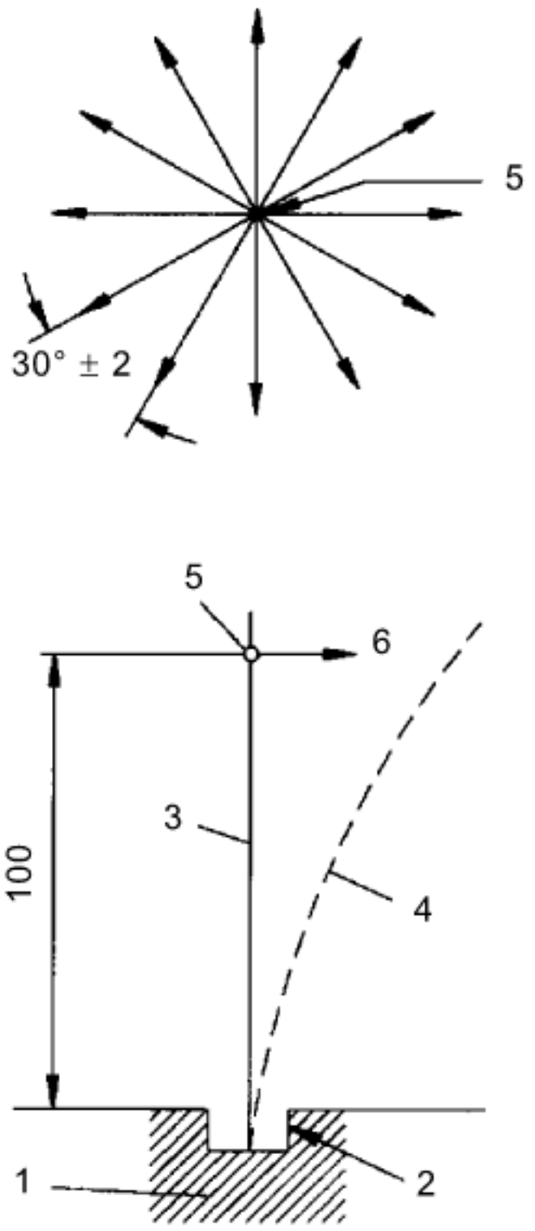

Figure 10a – Principle of the test apparatus for deflecting test on screwless terminal

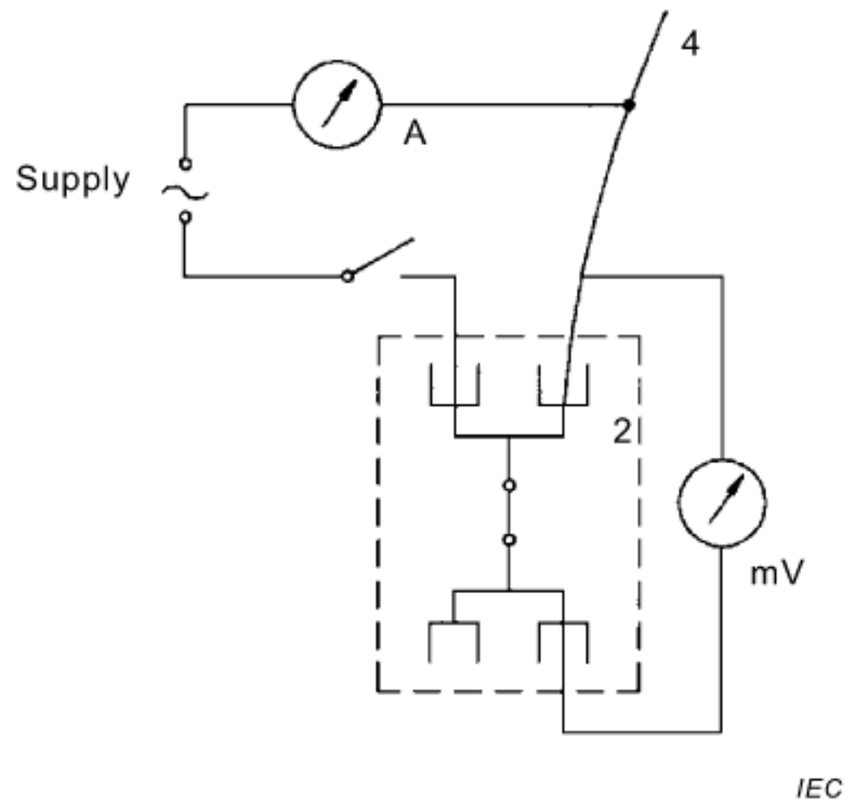

Figure 10b – Example of test arrangement to measure the voltage drop during deflecting test on screwless terminal

A	ammeter
S	switch
mV	millivoltmeter
1	specimen
2	clamping unit under test
3	conductor
4	conductor deflected
5	point of application of the force for deflecting the conductor
6	deflecting force (perpendicular to the straight conductor)

Figure 10 – Information for deflection test

International Electrotechnical Commission
Provided by IHS under license with IEC
No reproduction or networking permitted without license from IHS

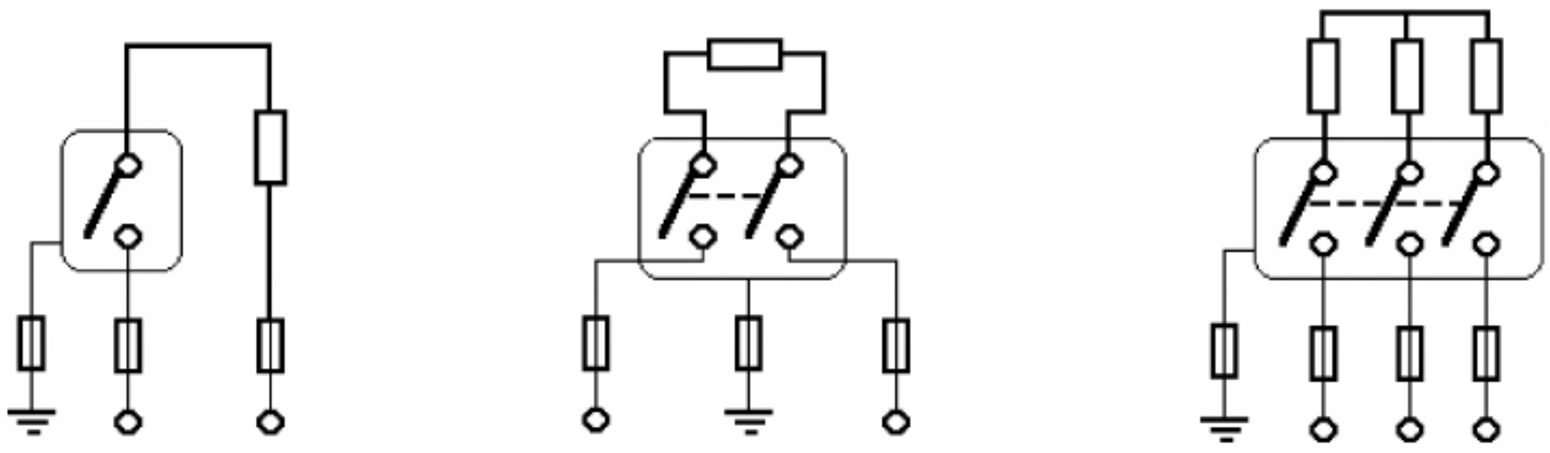

Switch pattern number 1 Switch pattern number 2 Switch pattern number 3

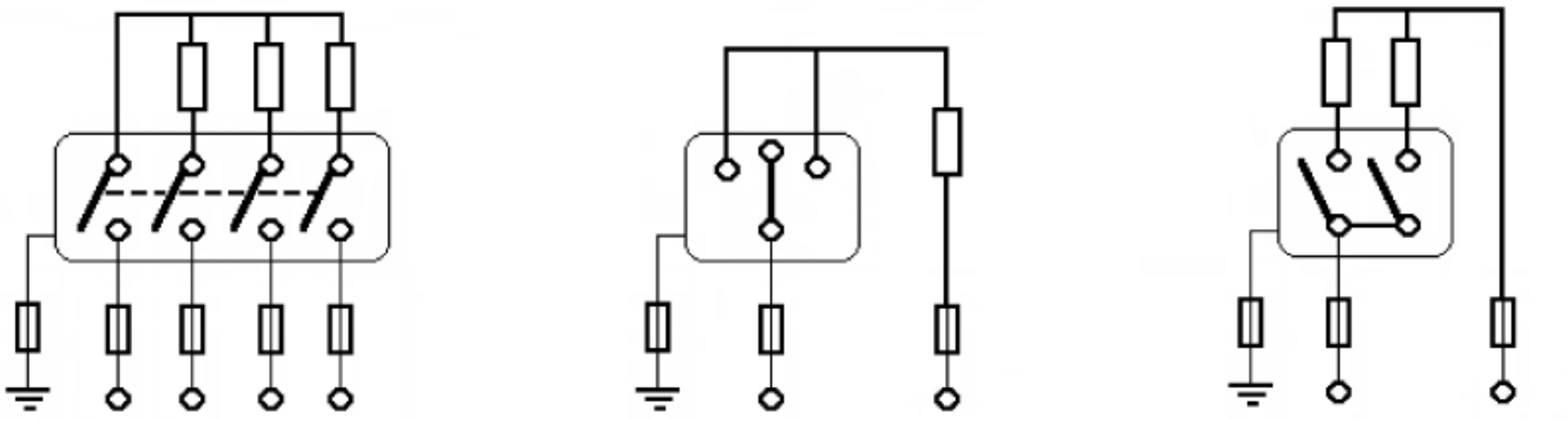

Switch pattern number 03 Switch pattern number 4 Switch pattern number 5

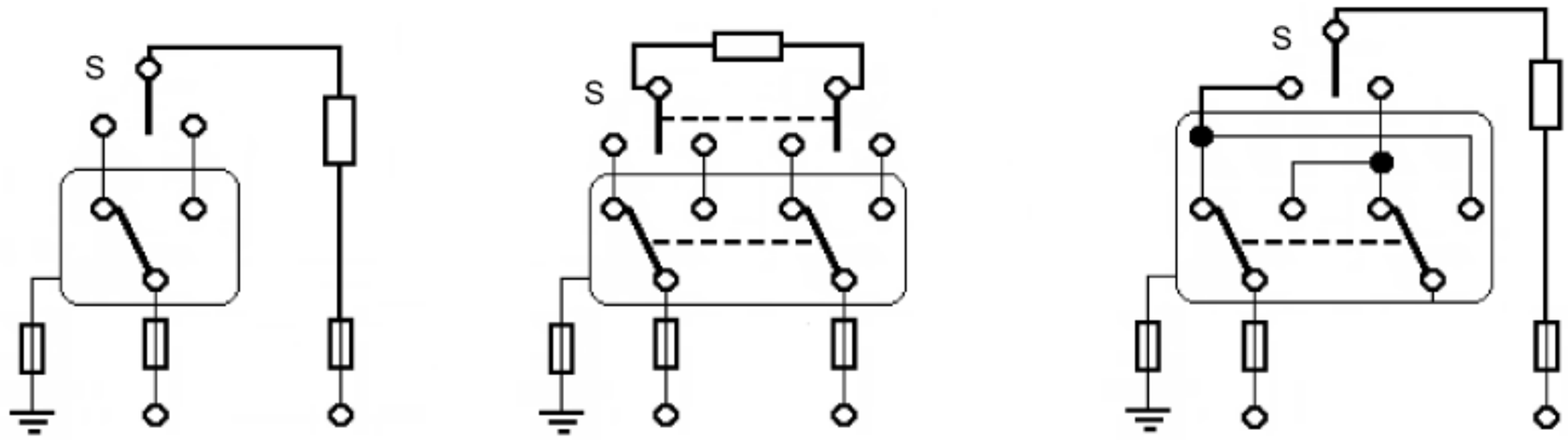

Switch pattern number 6 Switch pattern number 6/2 Switch pattern number 7

IEC

When the marking made by the manufacturer indicates other connections, this marking shall be followed.

Figure 11 – Circuit diagrams for making and breaking capacity and normal operation

International Electrotechnical Commission
Provided by IHS under license with IEC
No reproduction or networking permitted without license from IHS

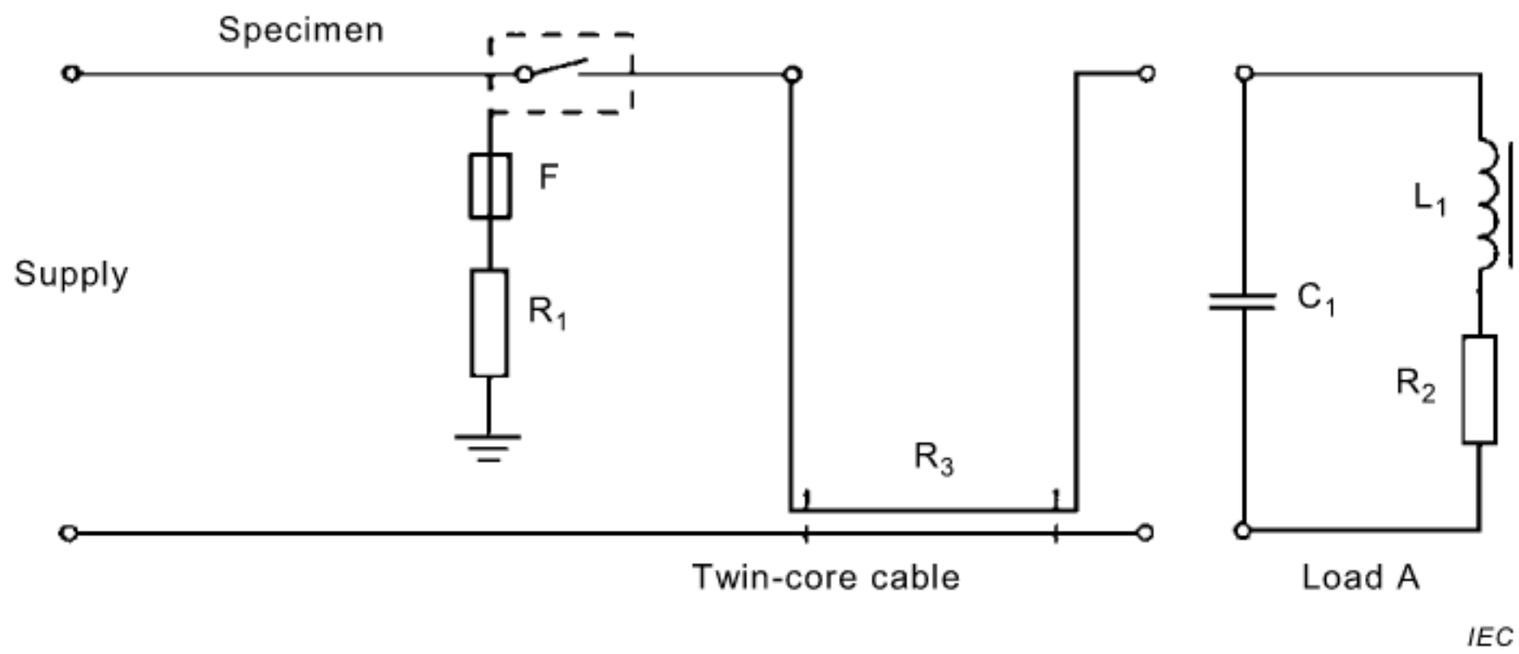

Figure 12a – Circuit diagrams for testing switches for use on externally ballasted lamp loads

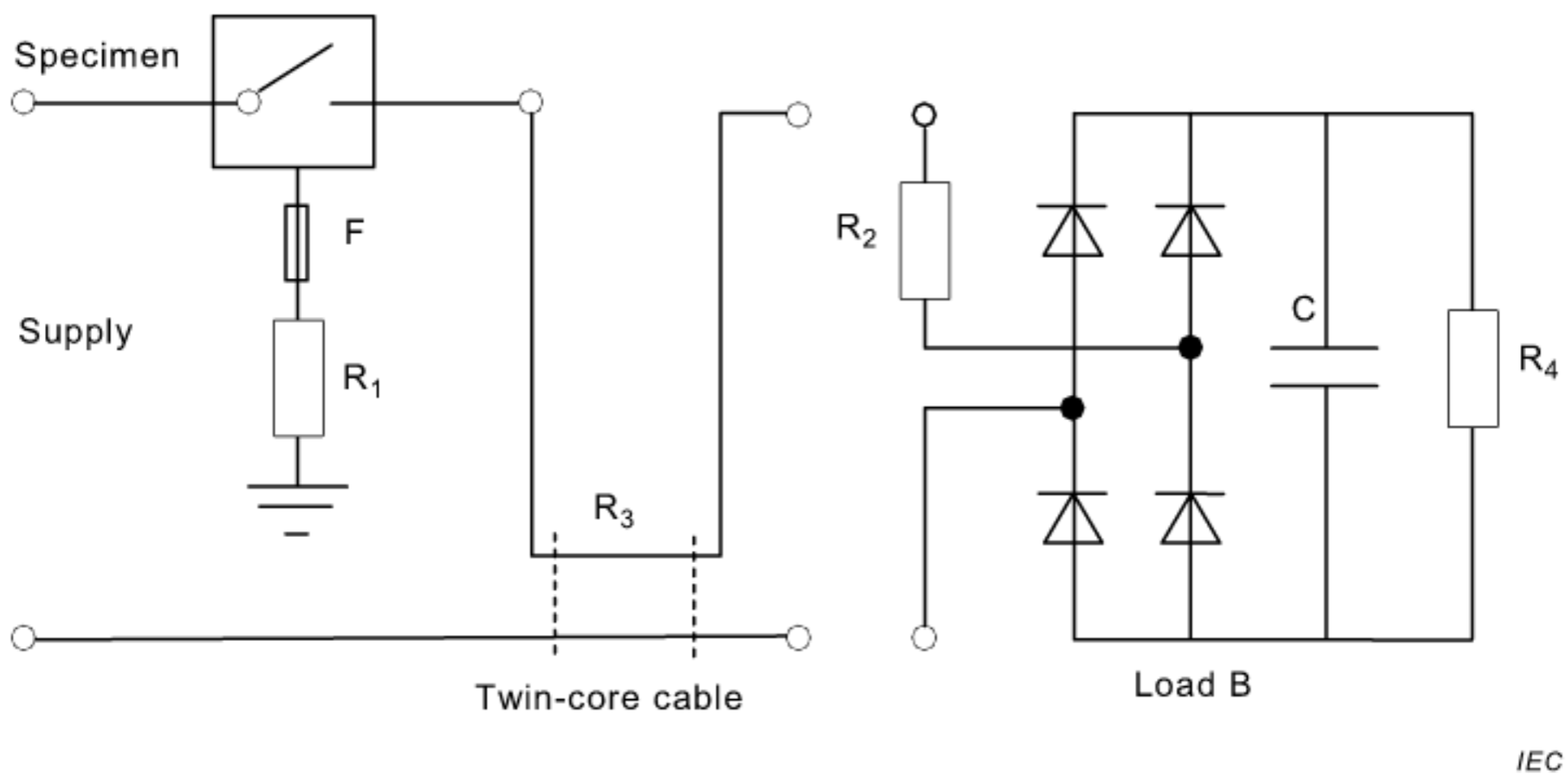

Figure 12b – Circuit diagrams for testing switches according to 19.3

Figure 12 – Circuit diagrams for testing switches

Dimensions in millimetres

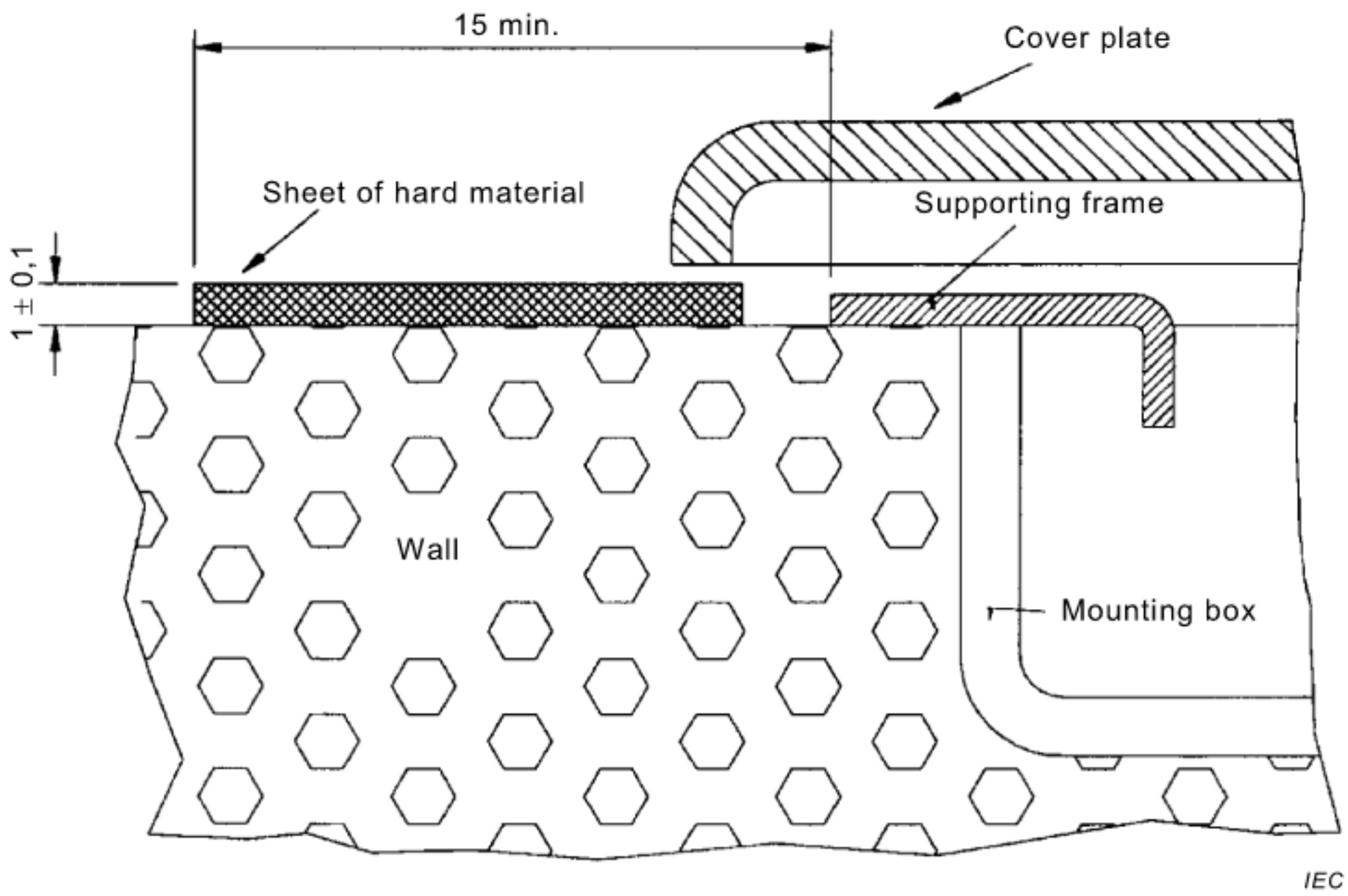

Figure 13 – Arrangement for test on cover-plates

International Electrotechnical Commission
Provided by IHS under license with IEC
No reproduction or networking permitted without license from IHS

Dimensions in millimetres

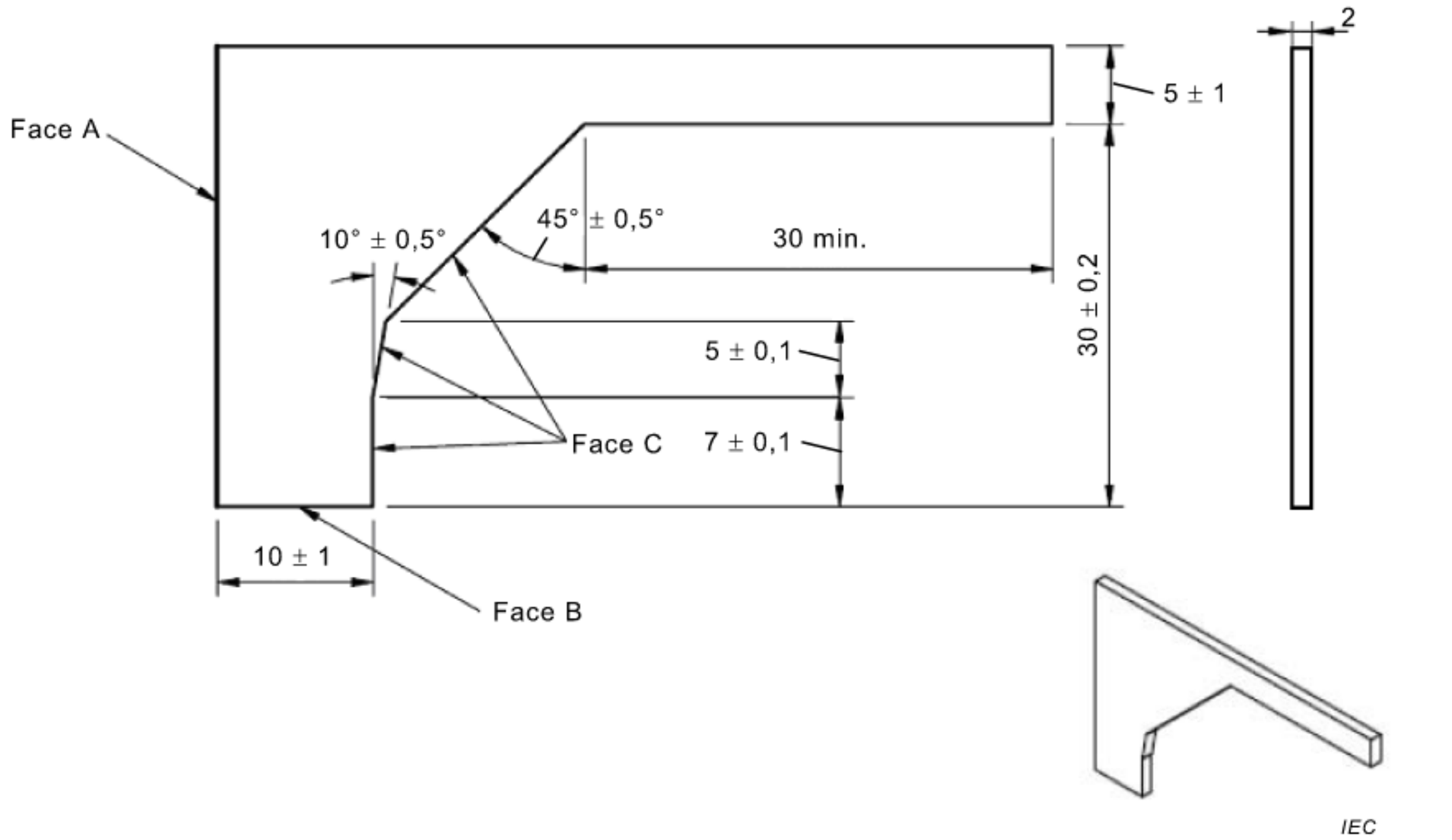

Figure 14 – Gauge (thickness: about 2 mm) for the verification of the outline of covers, cover-plates or actuating members

International Electrotechnical Commission
Provided by IHS under license with IEC
No reproduction or networking permitted without license from IHS

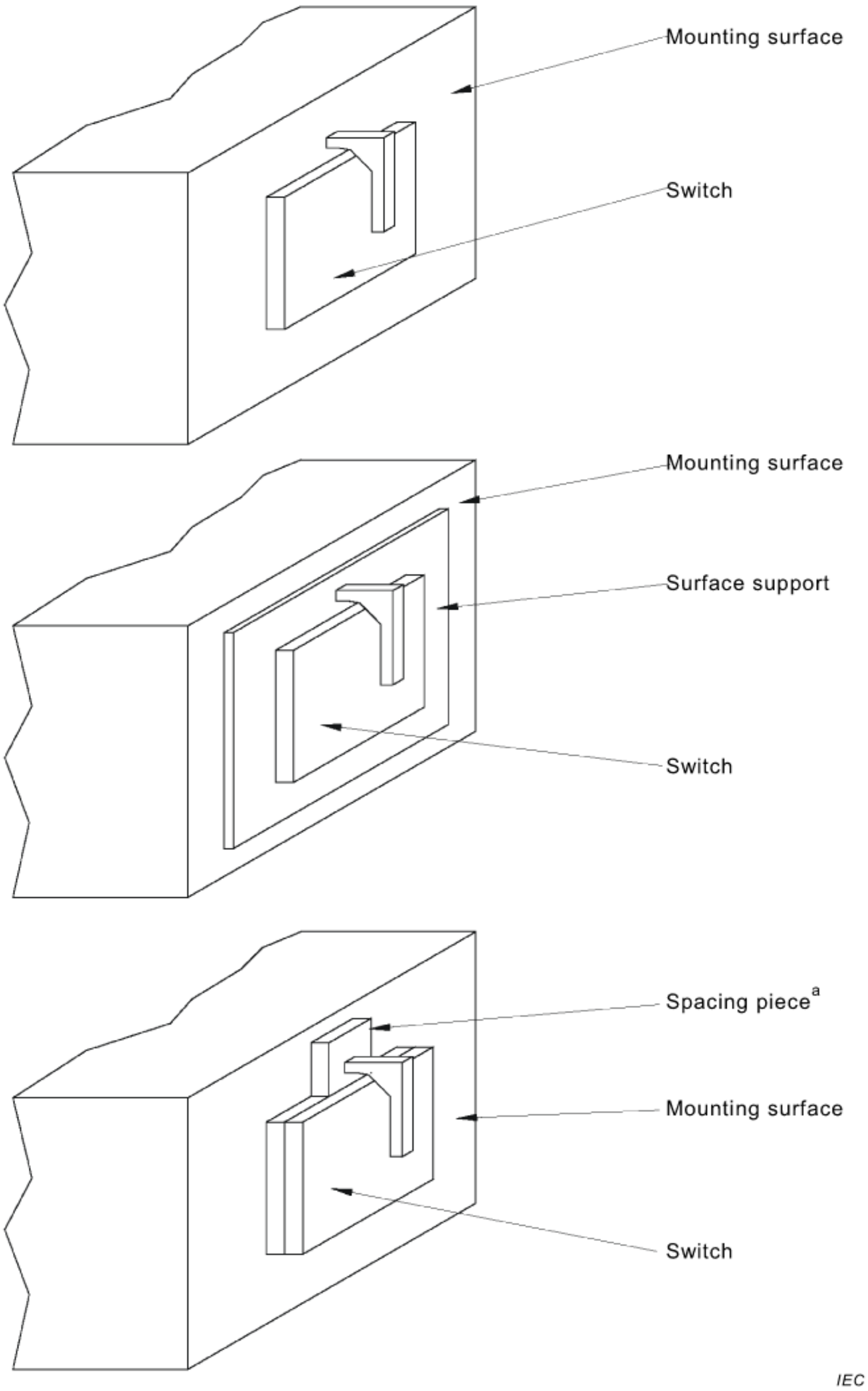

[a] The spacing piece has the same thickness as the supporting part.

Figure 15 – Example of application of the gauge of Figure 14 on covers fixed without screws on a mounting surface or supporting surface

International Electrotechnical Commission
Provided by IHS under license with IEC
No reproduction or networking permitted without license from IHS

Dimensions in millimetres

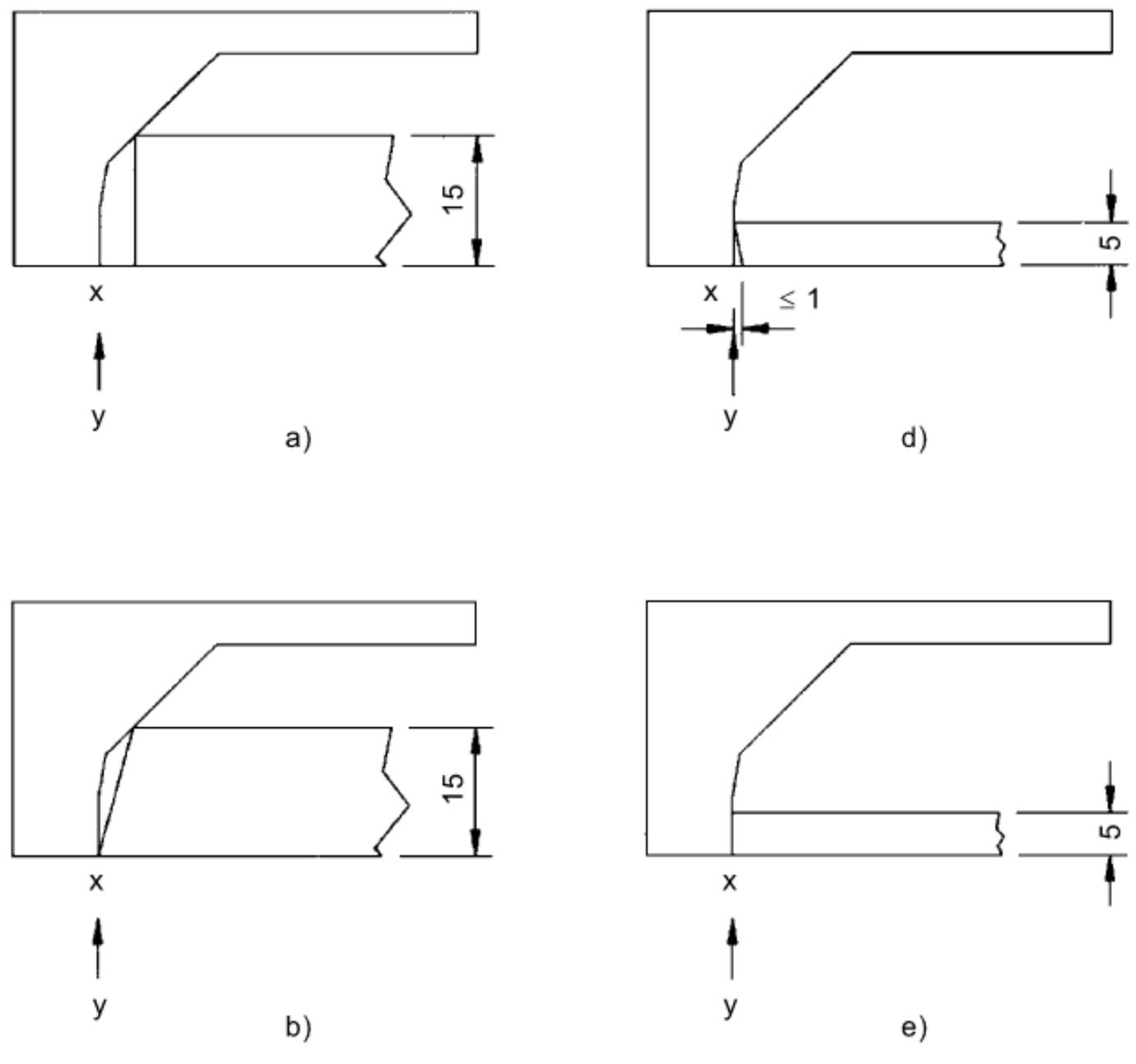

Cases a) and b): do not comply.

Cases c), d), e) and f): comply (compliance shall however be checked also with the requirements of 20.8 using the gauge shown in Figure 17).

Figure 16 – Examples of applications of the gauge of Figure 14 in accordance with the requirements of 20.8

International Electrotechnical Commission
Provided by IHS under license with IEC
No reproduction or networking permitted without license from IHS

Dimensions in millimetres

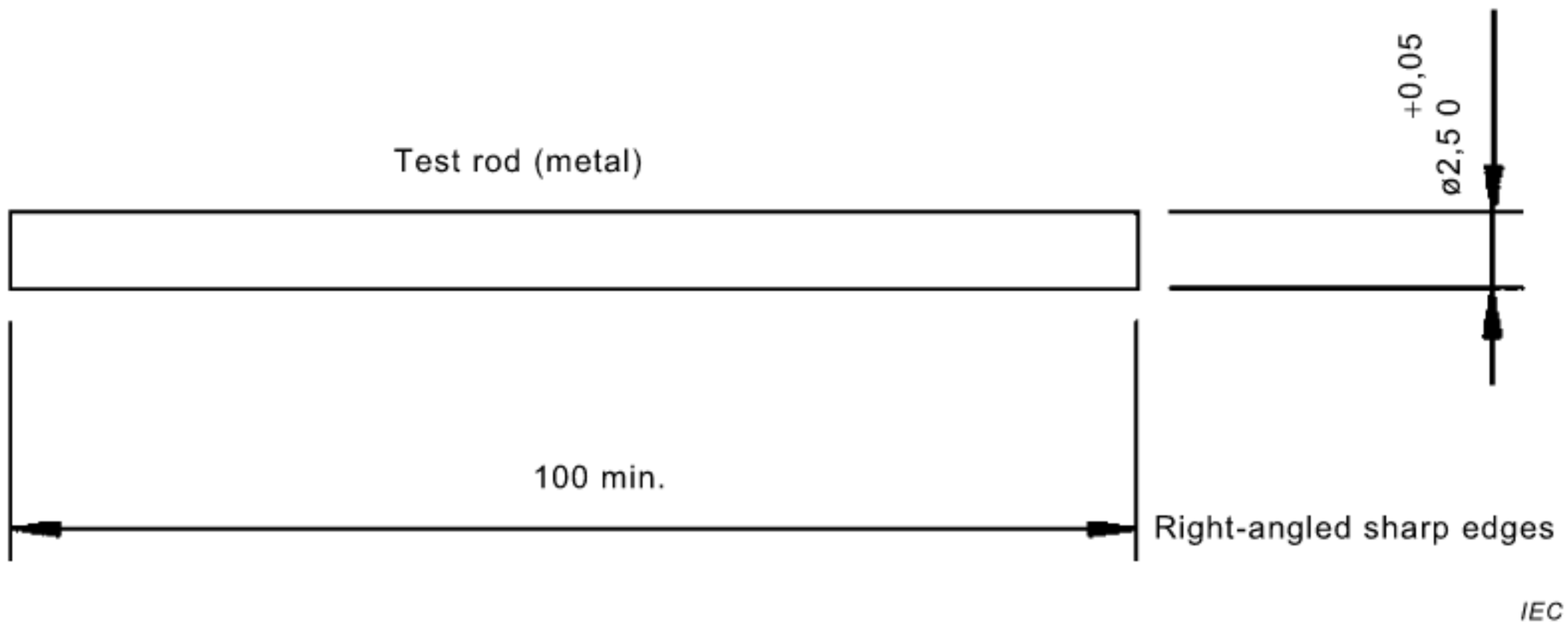

Figure 17 – Gauge for verification of grooves, holes and reverse tapers

Dimensions in millimetres

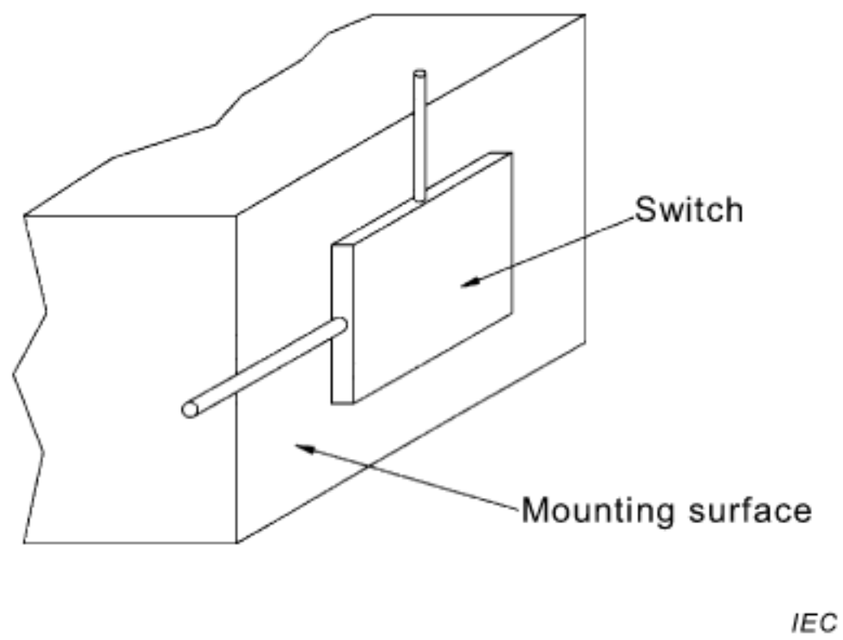

Figure 18 – Sketch showing the direction of application of the gauge of Figure 17

International Electrotechnical Commission
Provided by IHS under license with IEC
No reproduction or networking permitted without license from IHS

Dimensions in millimetres

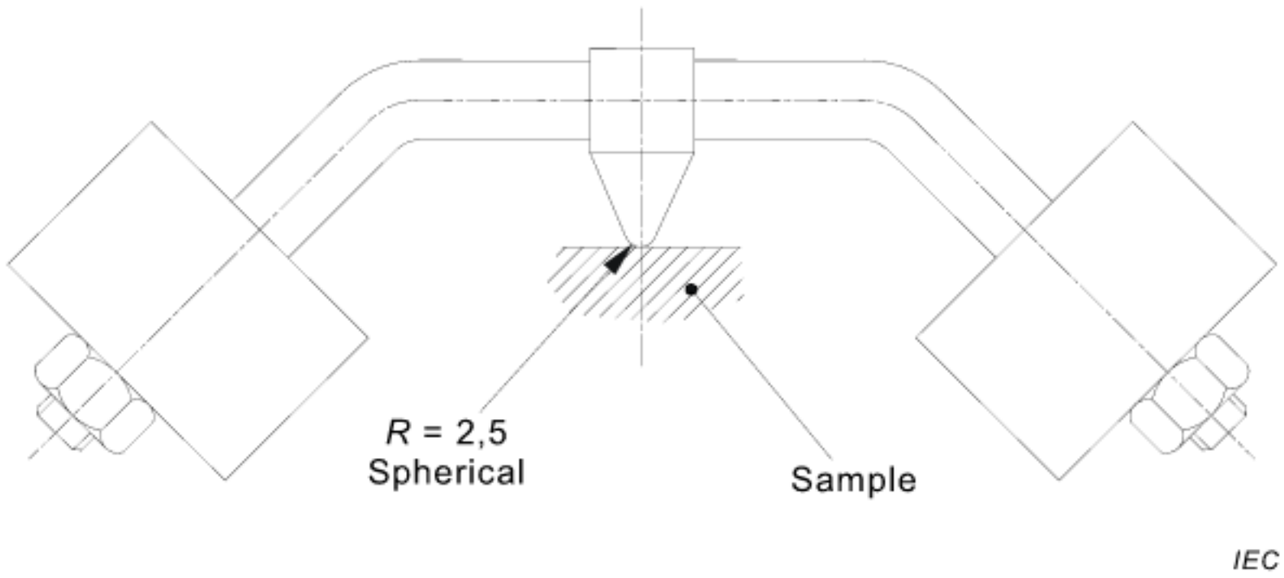

Figure 19 – Ball-pressure apparatus

Dimensions in millimetres

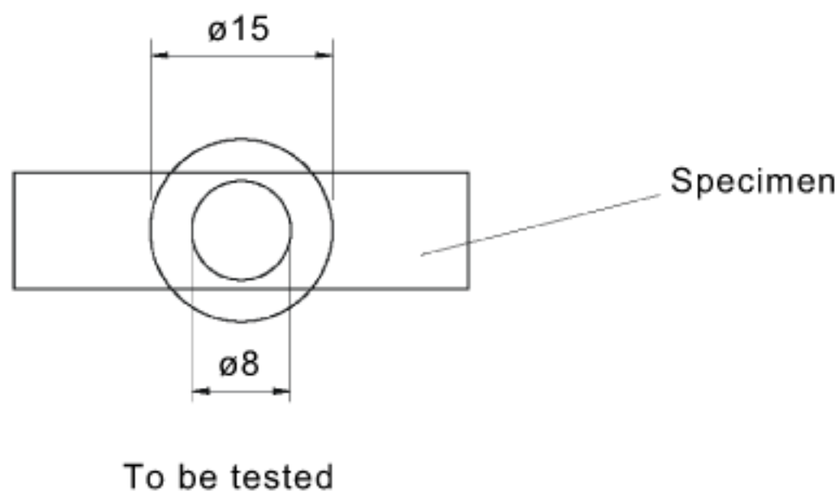

Figure 20 – Determining parts of insulating material to be tested – Diagrammatic representation (see 24.1)

International Electrotechnical Commission
Provided by IHS under license with IEC
No reproduction or networking permitted without license from IHS

Dimensions in millimetres

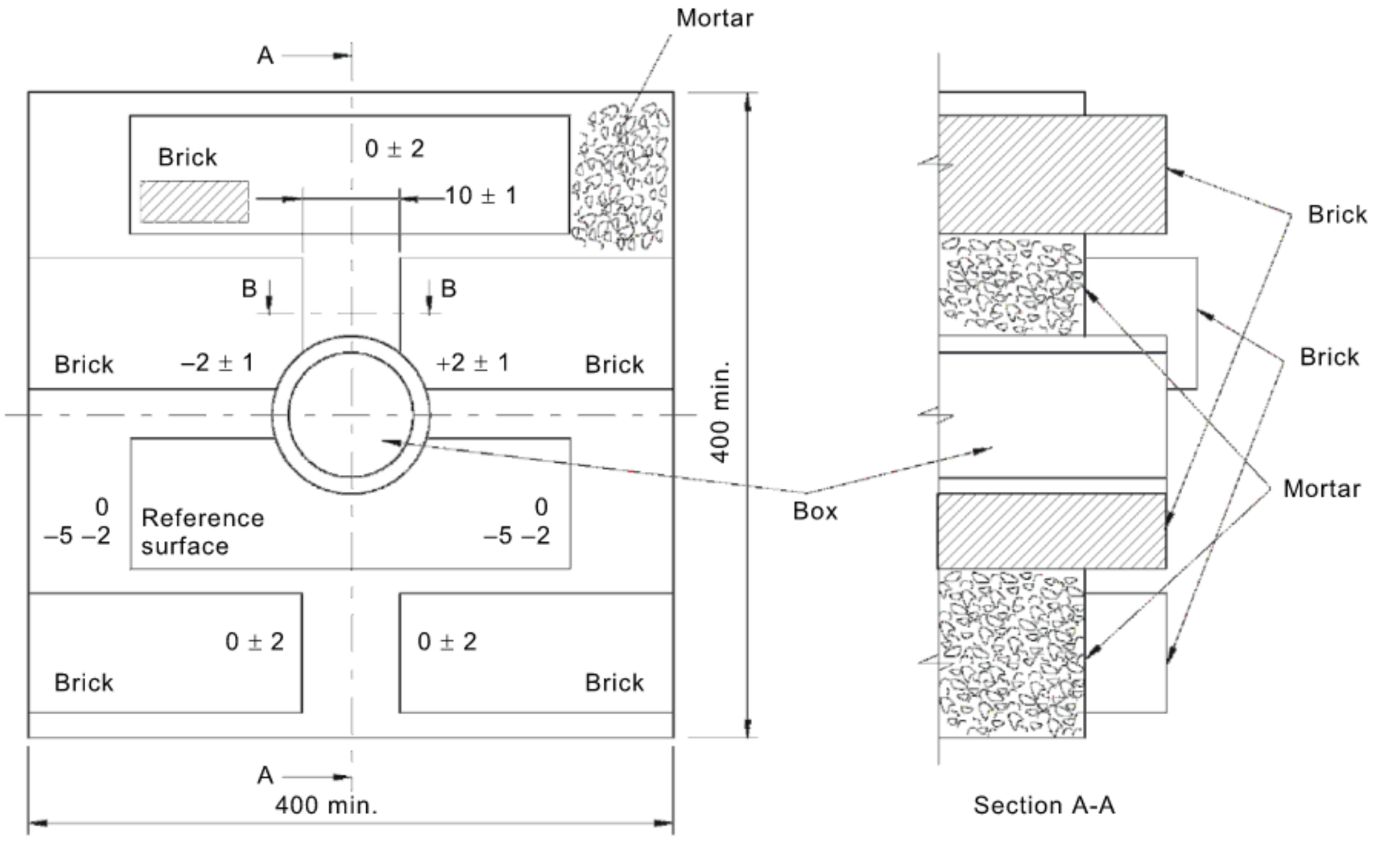

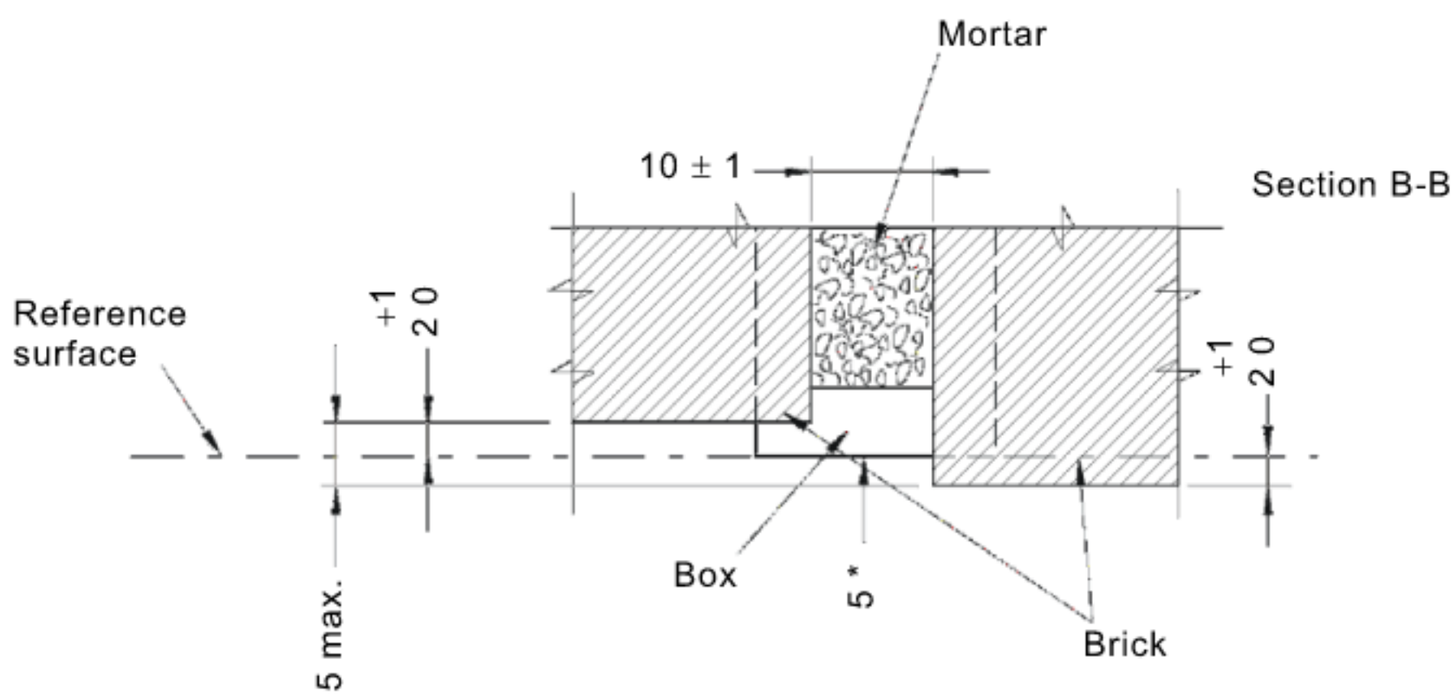

*or in accordance with the manufacturer's instructions

IEC

Figure 21 – Test wall in accordance with the requirements of 15.2.3

International Electrotechnical Commission
Provided by IHS under license with IEC
No reproduction or networking permitted without license from IHS

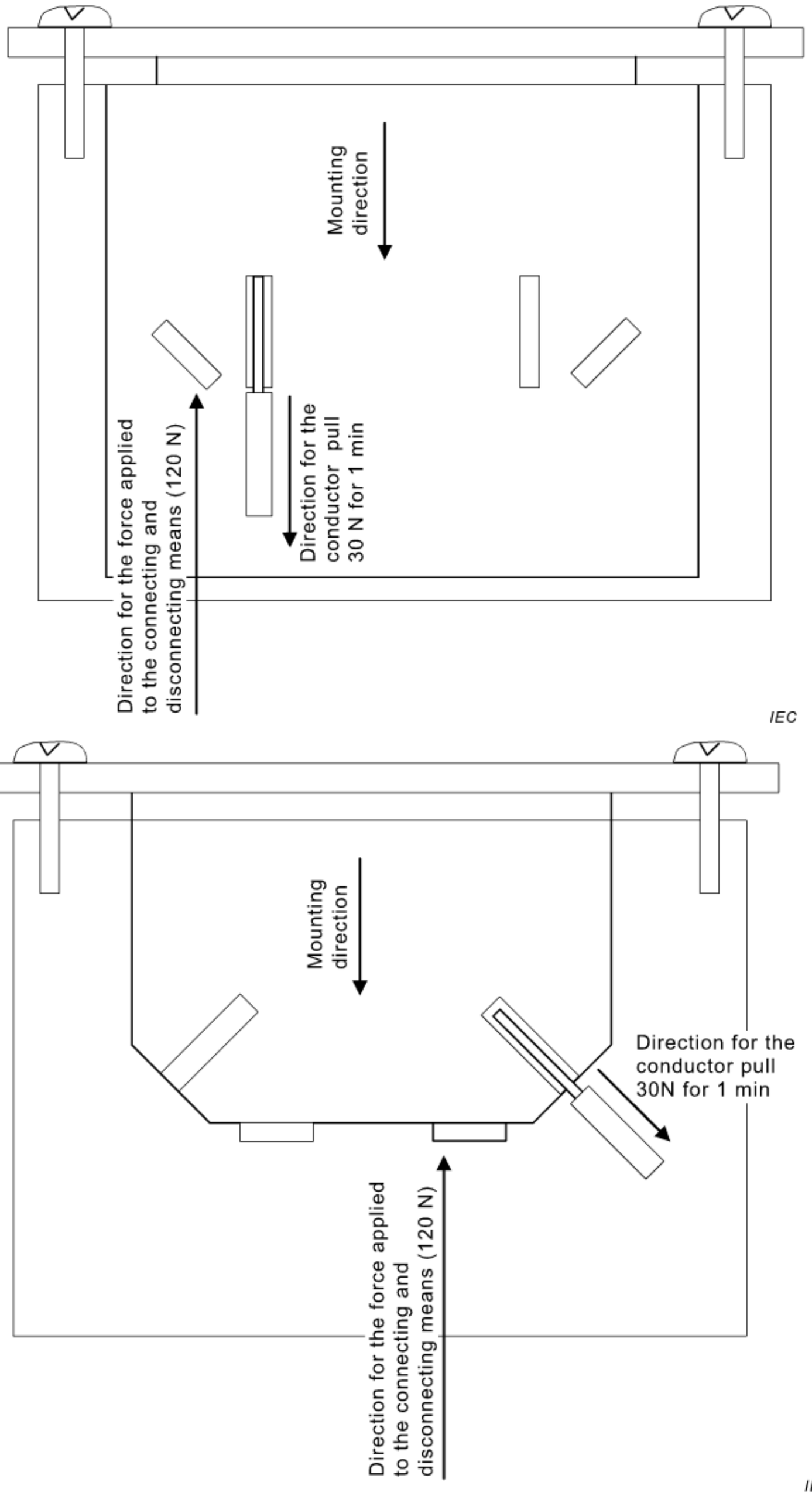

Figure 22a – Determination of the direction of the forces to be applied

International Electrotechnical Commission
Provided by IHS under license with IEC
No reproduction or networking permitted without license from IHS

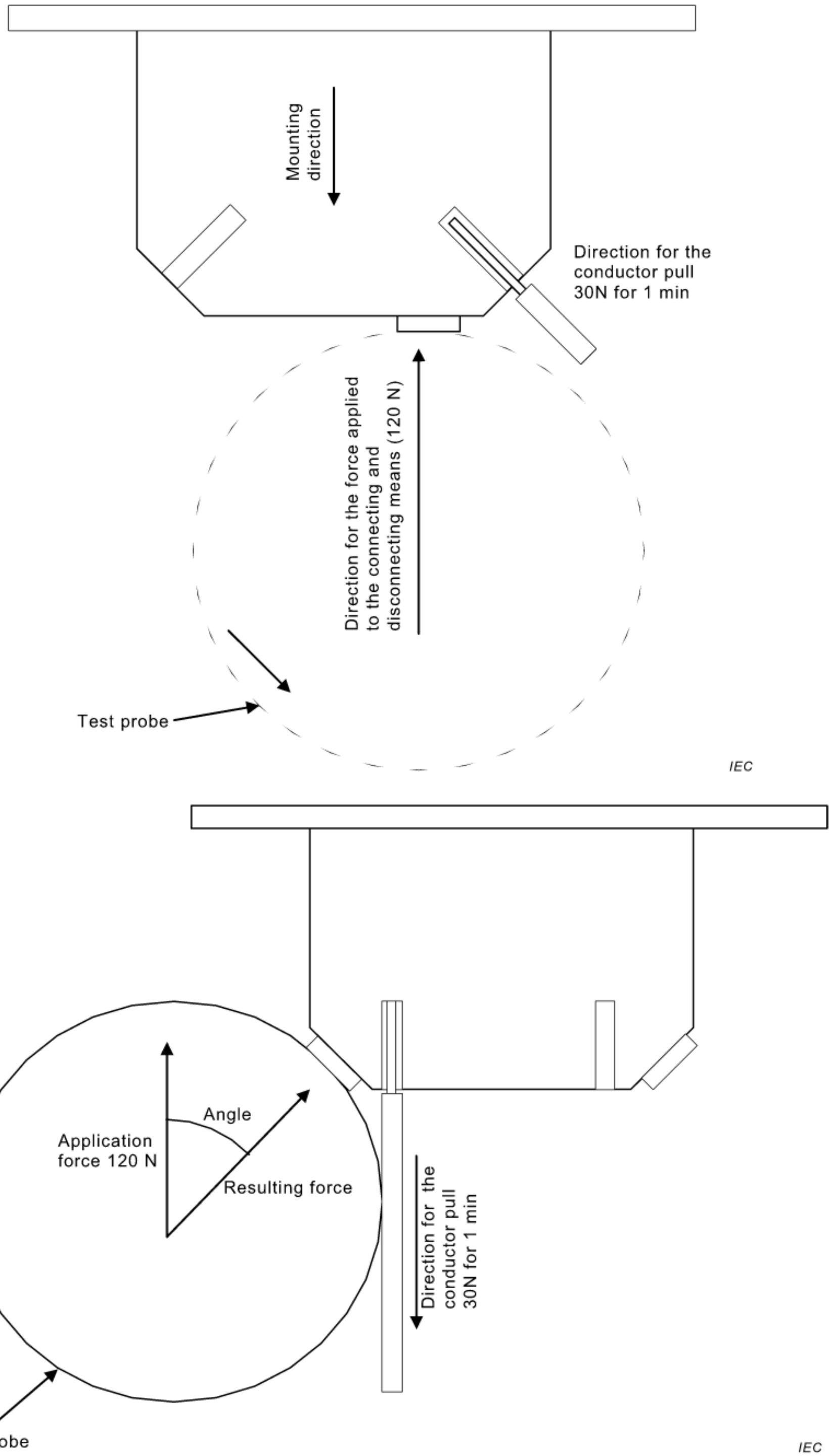

Figure 22b – Test set up

Figure 22 – Direction for the conductor pull of 30 N for 1 min

International Electrotechnical Commission
Provided by IHS under license with IEC
No reproduction or networking permitted without license from IHS

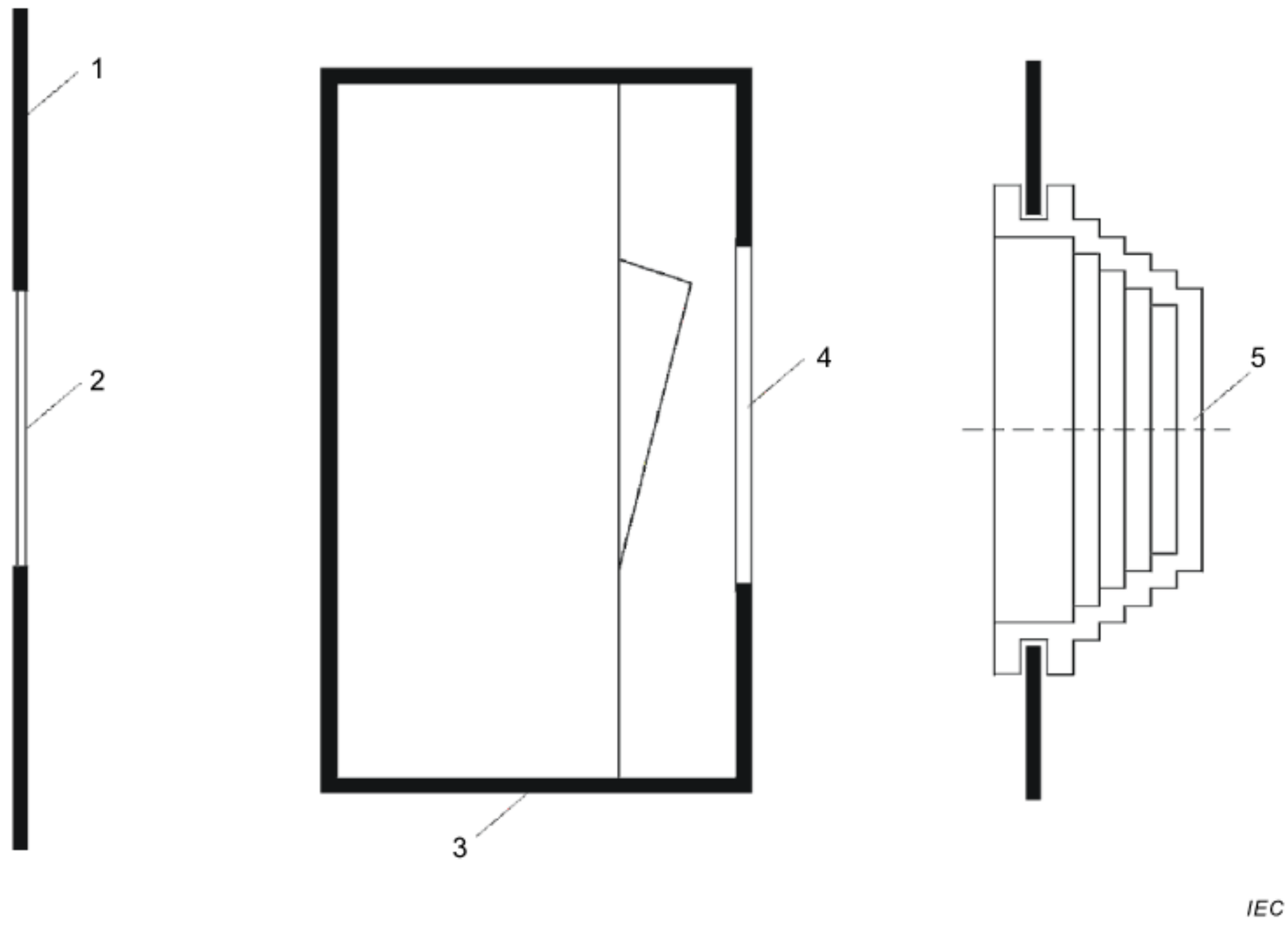

Key

1 Box

2 Entry membrane

3 Envelope

4 Protective membrane

5 Grommet

Figure 23 – Examples of membranes and grommets

International Electrotechnical Commission
Provided by IHS under license with IEC
No reproduction or networking permitted without license from IHS

Annex A
(normative)

Additional requirements for switches having facilities for the outlet and retention of flexible cables

The purpose of Annex A is to bring additional explanations and requirements to the normative text of this document. Therefore the numbering of clauses, subclauses, figures and tables follows that of the main body of the text. Only the relevant clauses, subclauses, tables and figures are cited. Any additional tables and figures are numbered starting from A.

3 Terms and definitions

Add the following definition:

3.23
flexible cable outlet switch
switch having provision for a flexible cable outlet

7 Classification

Add the following subclause:

7.10 according to the presence of a flexible cable outlet:

– without flexible cable outlet;
– with flexible cable outlet.

10 Protection against electric shock

10.1 Prevention of access to live parts

Add the following text at the end of the fourth paragraph:

For flexible cable outlet switches the test is carried out without the flexible cable fitted.

12 Terminals

12.2.5 *Add the following text after the fifth paragraph:*

For flexible cable outlet switches, the test is repeated with flexible cables of the appropriate size (see 13.15) following the same procedure.

13 Constructional requirements

Add the following subclause:

13.17 Flexible cable outlet switches shall be so designed that an appropriate flexible cable, complying with IEC 60245-4, code designation 60245 IEC 66 or IEC 60227-5, code designation 60227 IEC 53, or as specified by the manufacturer, may enter the switch through a suitable hole, groove or gland. The entry shall accept the maximum dimensions (outer sheath) of the appropriate flexible cable, having conductors of the cross-sectional area

International Electrotechnical Commission
Provided by IHS under license with IEC
No reproduction or networking permitted without license from IHS

specified in Table A.1, according to the current rating of the switch, but with a minimum of 1,5 mm^2 and the entry shall be so shaped as to prevent damage to the flexible cable.

A cable anchorage for the flexible cable shall be provided such that the conductors are relieved from strain, including twisting, where they are connected to the terminals or terminations.

The cable anchorage shall contain the sheath and shall be either of insulating material or, if of metal, shall be provided with an insulating lining fixed to the metal parts.

Cable anchorages shall anchor the flexible cable securely to the switch.

The design shall ensure that

– the cable anchorage cannot be released from the outside;
– clamping the cable does not require the use of a special purpose tool.

Table A.1 – Limits of external dimensions of flexible cables

Rated current	Cross-sectional area of conductors	Number of conductors	Limits of external dimensions of flexible cables	
			Minimum	Maximum
A	mm^2		mm	mm
6	0,75 up to and including 1,5	2	5,7 or 3,7 × 6,0	11,0
		3		11,9
		4		13,1
		5		14,4
10 and 13	1 up to and including 2,5	2	5,9 or 3,9 × 6,2	13,1
		3		14,0
		4		15,5
		5		17
16	1,5 up to and including 4	2	6,8	15,1
		3		16,2
		4		17,9
		5		19,9
20 to 25	2,5 up to and including 6	2	8,4	16,8
		3		18,0
		4		20,0
		5		22,2
NOTE The limits of the external diameter of cables specified in this table are based on type 60227 IEC 53 according to IEC 60227-5 and type 60245 IEC 66 according to IEC 60245-4 and are given for information.				

Screws which are used when clamping the flexible cable shall not serve to fix any other component unless the switch is rendered manifestly incomplete if the component is omitted or is replaced in an incorrect position, or the component intended to be fixed cannot be removed without further use of a tool.

Compliance is checked by inspection and by the following tests:

International Electrotechnical Commission
Provided by IHS under license with IEC
No reproduction or networking permitted without license from IHS

Switches are fitted with a flexible cable complying with IEC 60227-5, code designation 60227 IEC 53, having a nominal conductor cross-sectional area of 1,5 mm^2 and the number of cores corresponding to the number of poles of the switch.

NOTE For the purposes of this test, earth is considered as a pole.

The conductors are introduced into the terminals and the terminal screws tightened just sufficiently to prevent the conductors easily changing their position. The cable anchorage is used in the normal way, the clamping screws, if any, being tightened to a torque of two-thirds of that given in Table 5.

After this preparation, it shall not be possible to push the flexible cable into the switch to such an extent as to impair safety or so that the cable anchorage is loosened.

The flexible cable is then subjected 25 times to a pull of 30 N. The pulls are applied without jerks in the most unfavourable direction, each time for 1 s. Immediately afterwards, the flexible cable is subjected for 1 min to a torque of 0,15 Nm as near as practicable to the cable entry.

The above test is then repeated, the switch being fitted with the appropriate largest diameter flexible cable complying with IEC 60245-4, code designation 60245 IEC 66. The pull is increased to 60 N and the torque is increased to 0,35 Nm.

After the test the flexible cable shall not have been displaced by more than 2 mm.

For the measurement of longitudinal displacement a mark is made on the flexible cable whilst it is subjected to a pull, at a distance of approximately 20 mm from the cable anchorage, before starting the test. After the test the displacement of the mark on the flexible cable in relation to the cable anchorage is measured whilst the flexible cable is again subjected to a pull.

An AC voltage of 2 000 V is applied for 1 min between the conductors and the cord anchorage.

During the test, the insulation of the flexible cable shall not be damaged. Breakdown or flashover is considered to indicate damage to the flexible cable.

International Electrotechnical Commission
Provided by IHS under license with IEC
No reproduction or networking permitted without license from IHS

Annex B
(informative)

Changes planned for the future in order to align IEC 60669-1 with the requirements of IEC 60998 (all parts), IEC 60999 (all parts) and IEC 60228

Annex B is provided for information to show the large number of changes planned for the future to align IEC 60669-1 with the requirements of IEC 60998 (all parts), IEC 60999 (all parts) and IEC 60228.

There is no intention that Annex B be used for any conformity testing or certification.

The purpose of Annex B is to bring additional explanations and requirements to the normative text of this document. Therefore the numbering of clauses, subclauses, figures and tables follows that of the main body of the text. Only the relevant clauses, subclauses, tables and figures are cited. Any additional tables and figures are numbered starting from B.

12 Terminals

Replace Clause 12 by the following:

12.1 General

Switches shall be provided with terminals having screw clamping or with screwless terminals.

The means for clamping the conductors in the terminals shall not serve to fix any other component, although they may hold the terminals in place or prevent them from turning.

The test of 12.2.8 and 12.3.9 including 12.3.10 shall be carried out after the test of 15.1. Rigid solid conductors shall be of Class 1, rigid stranded conductors shall be of Class 2 and flexible conductor shall be of Class 5 according to IEC 60228.

Compliance is checked by inspection and by the tests of 12.2 or 12.3, as applicable.

Terminals having screw clamping complying with IEC 60998-2-1 are considered to be in compliance with the requirements and tests of 12.2 provided they are chosen according to Table 4, except for the requirements according to 12.2.7 and 12.2.8. The tests of 12.2.7 and 12.2.8 shall be carried out in addition.

The connecting capability of terminals for circuits other than those of the main circuit (for example terminals for pilot lights) need not be in relation with the rated current of the switch. This means that these terminals need not necessarily have the same connecting capability as the mains terminals of the switch. Terminals for circuits other than those of the main circuit shall fulfil the requirements of IEC 60998 (all parts) or IEC 60999 (all parts).

Terminals having screwless clamping complying with IEC 60998-2-2 are considered to be in compliance with the requirements and tests of 12.3 provided they are chosen according to Table 8, except for the requirements of 12.3.7 and 12.3.9. The tests of 12.3.7 and 12.3.9 shall be carried out in addition.

12.2 Terminals with screw clamping for external copper conductors

12.2.1 Terminals with screw clamping shall be of the type suitable for rigid copper conductors only or of the type suitable for both rigid and flexible copper conductors having cross-sectional areas as shown in Table 4.

International Electrotechnical Commission
Provided by IHS under license with IEC
No reproduction or networking permitted without license from IHS

Table 4 – Relationship between rated currents and connectable cross-sectional areas of copper conductors

Ranges of rated currents A	Conductors Nominal cross-sectional areas mm^2
up to and including 6[a]	From 0,75 up to 1,5 inclusive
above 6 up to and including 13[b]	From 1 up to 2,5 inclusive
above 13 up to and including 16[b]	From 1,5 up to 4 inclusive
above 16 up to and including 25	From 2,5 up to 6 inclusive
above 25 up to and including 32	From 4 up to 10 inclusive
above 32 up to and including 50	From 6 up to 16 inclusive
above 50 up to and including 63	From 10 up to 25 inclusive

a For rated current up to 4 A when used for special purposes such as ELV applications, flexible conductors from 0,5 mm^2 up to 1 mm^2 inclusive can be used.

b Each supply terminal of switches, other than those of pattern numbers 3, 03 and 7, shall allow the connection of two 2,5 mm^2 conductors. For switches having a rated voltage not exceeding 250 V, one hole is sufficient for the connection of two 2,5 mm^2 conductors.

The conductor space shall be at least that specified in Figures 1, 2, 3, 4 and 5 or shall accept the conductor(s) of the largest nominal cross-sectional area as specified in Table 4 and with dimensions as specified in IEC 60999-1:1999, Annex B.

Compliance is checked by inspection, by measurement according to the Figures 1 to 5 or by fitting conductors with the largest theoretical diameter as specified in IEC 60999-1:1999, Annex B for the largest nominal cross-sectional area as specified in Table 4 or by using the relevant gauges as specified in IEC 60999-1:1999, Annex B.

12.2.2 Terminals with screw clamping shall allow the conductor to be connected without special preparation.

Compliance is checked by inspection.

NOTE The term "special preparation" covers soldering of the wires of the conductor, use of cable lugs, formation of eyelets, etc., but not the reshaping of the conductor before its introduction into the terminal or the twisting of a flexible conductor to consolidate the end.

12.2.3 Terminals with screw clamping shall have adequate mechanical strength.

Screws and nuts for clamping the conductors shall have a metric ISO thread or a thread comparable in pitch and mechanical strength.

Screws and nuts of terminals shall be of metal and in engagement with a metal thread.

Screws shall not be of metal which is soft or liable to creep, such as zinc or aluminium.

NOTE 1 The use of aluminium alloy screws in aluminium alloy terminals requires additional tests, according to IEC 61545.

Compliance is checked by inspection and by the tests of 12.2.6 and 12.2.8.

NOTE 2 Provisionally SI, BA, and UN threads are considered to be comparable in pitch and mechanical strength to metric ISO thread.

12.2.4 Terminals with screw clamping shall be resistant to corrosion.

International Electrotechnical Commission
Provided by IHS under license with IEC
No reproduction or networking permitted without license from IHS

Terminals, the body of which is made of copper or copper alloy as specified in 22.5 are considered as complying with this requirement.

Compliance is checked by inspection or by chemical analysis if necessary.

12.2.5 Terminals with screw clamping shall be so designed and constructed that they clamp the conductor(s) without undue damage to the conductor(s).

Compliance is checked by the following tests which are performed on three new specimens of each type of terminal:

Terminals suitable for rigid conductors only are checked with rigid solid conductors and on a new set of specimens with rigid stranded conductors, if existing.

NOTE "if existing" means that the conductor is available in the market where the product is sold and installed.

Terminals suitable for rigid and flexible conductors are checked with rigid conductors as above and on a new set of specimens with flexible conductors.

The terminal is placed in the test apparatus according to Figure 9.

The following tests shall be carried out using new specimens for each of the following:

The terminal is fitted with

a) the minimum number of conductors of the smallest nominal cross-sectional area;

b) the minimum number of conductors of the largest nominal cross-sectional area;

and, if applicable,

c) the maximum number of conductors of the smallest nominal cross-sectional area of the same type;

d) the maximum number of conductors of the largest nominal cross-sectional area of the same type, according to Table 4.

The clamping screw(s) or nut(s) is(are) tightened with the torque according to Table 5.

Where a screw has a hexagonal head with a slot for tightening with a screwdriver and the values of columns 3 and 5 are different, the test is made twice, first applying to the hexagonal head the torque specified in column 5 and then applying the torque specified in column 3 by means of a screwdriver. If the values of columns 3 and 5 are the same, only the test with the screwdriver is made.

For mantle terminals, the specified nominal diameter is that of the slotted stud.

The shape of the blade of the test screwdriver shall suit the head of the screw to be tested.

The screws and nuts shall be tightened in one smooth and continuous motion.

If the terminal is fitted with more than one conductor, the test is done on each of the conductors consecutively.

The length of the test conductor shall be at least 75 mm longer than the height (H) specified in Table 6.

The end of the conductor is passed through an appropriate sized bushing in a platen positioned at a height (H) below the equipment as given in Table 6. The bushing shall be

International Electrotechnical Commission
Provided by IHS under license with IEC
No reproduction or networking permitted without license from IHS

positioned in a horizontal plane such that its centre line describes a circle of 75 mm diameter, concentric with the centre of the clamping unit in the horizontal plane.

The distance between the mouth of the clamping unit and the upper surface of the bushing shall be as specified in Table 6 with a tolerance of ±15 mm. The bushing may be lubricated to prevent binding, twisting, or rotation of the insulated conductor.

A mass as specified in Table 6 is to be suspended from the end of the conductor.

Then the platen is rotated 150 turns at a speed of (10 ± 2) r/min.

During the test, the rigid conductor, or any wire of rigid stranded, or flexible conductor, shall neither slip out of the clamping unit nor break near the clamping unit, nor shall the conductor be damaged in such a way as to render it unfit for further use.

In the case of the flexible conductor, the break of a few wires shall not be taken into account provided it does not exceed 15 % of the original number of wires.

Immediately after each rotation test, the test of 12.2.6 is performed.

The terminals shall not be tightened or untightened.

International Electrotechnical Commission
Provided by IHS under license with IEC
No reproduction or networking permitted without license from IHS

Table 5 – Tightening torque for the verification of the mechanical strength of screw-type terminals

Nominal diameter of thread mm	Torque Nm					
	1	2	3	4	5	6
	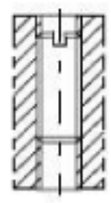	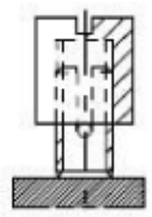	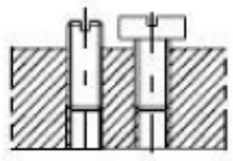	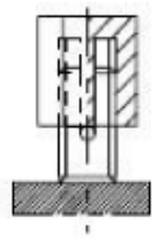	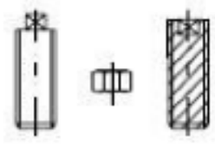	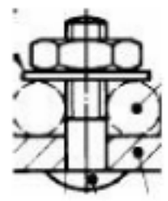
Up to and including 2,8	0,2	–	0,4	–	0,4	–
Over 2,8 up to and including 3,0	0,25	–	0,5	–	0,5	–
Over 3,0 up to and including 3,2	0,3	–	0,6	–	0,6	–
Over 3,2 up to and including 3,6	0,4	–	0,8	–	0,8	–
Over 3,6 up to and including 4,1	0,7	1,2	1,2	1,2	1,2	–
Over 4,1 up to and including 4,7	0,8	1,2	1,8	1,8	1,8	–
Over 4,7 up to and including 5,3	0,8	1,4	2,0	2,0	2,0	–
Over 5,3 up to and including 6,0	–	1,8	2,5	3,0	3,0	–
Over 6	–	–	–	–	–	0,8

Column 1 applies to screws without heads if the screw, when tightened, does not protrude from the hole, and to other screws which cannot be tightened by means of a screwdriver with a blade wider than the diameter of the screw.

Column 2 applies to nuts of mantle terminals which are tightened by means of a screwdriver.

Column 3 applies to other screws which are tightened by means of a screwdriver.

Column 4 applies to nuts of mantle terminals in which the nut is tightened by means other than a screwdriver.

Column 5 applies to screws or nuts, other than nuts of mantle terminals, which are tightened by means other than a screwdriver.

Column 6 applies to nuts of switches with central hole fixing.

Table 6 – Test values for flexion and pull out of copper conductors

Conductor cross-sectional area mm^2	Diameter of bushing hole [a] mm	Height *H* [b] mm	Mass for conductor kg
0,5	6,5	260	0,3
0,75	6,5	260	0,4
1,0	6,5	260	0,4
1,5	6,5	260	0,4
2,5	9,5	280	0,7
4,0	9,5	280	0,9
6,0	9,5	280	1,4
10,0	9,5	280	2,0
16,0	13,0	300	2,9
25,0	13,0	300	4,5

NOTE AWG sizes corresponding to mm^2 can be found in IEC 60999-1.

[a] If the bushing hole diameter is not large enough to accommodate the conductor without binding, a bushing having the next larger hole size may be used.

[b] Tolerance for height *H* = ±15 mm.

International Electrotechnical Commission
Provided by IHS under license with IEC
No reproduction or networking permitted without license from IHS

12.2.6 Terminals with screw clamping shall be so designed that they clamp the conductor reliably between metal surfaces.

Compliance is checked by inspection and by the following test:

After each rotation test of 12.2.5, the pulling force given in Table 7 shall be applied to the conductor under test in accordance with 12.2.5. Clamping screws or nuts, if any, shall not be retightened for this test. The force shall be applied in one smooth and continuous application, for 1 min, in the direction of the axis of the conductor. During the test the conductor shall not come out of the terminal.

Table 7 – Relationship between pull force and cross-sectional area

Cross-sectional area mm^2	Pull force N
0,5	20
0,75	30
1,0	35
1,5	40
2,5	50
4	60
6	80
10	90
16	100
25	135

After these tests, neither the terminals nor the clamping means shall have worked loose and the conductors shall show no deterioration impairing their further use.

NOTE In the following countries, terminals allowing connection of two conductors are additionally tested with one rigid solid conductor and one rigid stranded conductor with the same cross-sectional area connected at the same time: DK, FI, NO, SE, ZA.

12.2.7 Terminals with screw clamping shall be so designed or placed that neither a rigid solid conductor nor a wire of a stranded conductor can slip out while the clamping screws or nuts are tightened.

This requirement does not apply to lug terminals.

Compliance is checked by the following test:

Terminals suitable for rigid conductors only are checked with rigid solid conductors and on a new set of specimens with rigid stranded conductors, if existing.

NOTE "if existing" means that the conductor is available in the market where the product is sold and installed.

Terminals suitable for rigid and flexible conductors are checked with rigid solid conductors and on a new set of specimens with rigid stranded conductors, if existing.

The terminals are fitted with conductors having the largest cross-sectional area specified in Table 4.

Terminals intended for the looping-in of two or more conductors are checked fitted with the permissible number of conductors.

International Electrotechnical Commission
Provided by IHS under license with IEC
No reproduction or networking permitted without license from IHS

The terminals are fitted with conductors having the composition given in IEC 60228.

Before insertion into the clamping means of the terminal, wires of rigid (solid or stranded) conductors are straightened; rigid stranded conductors may, in addition, be twisted to restore them approximately to their original shape and flexible conductors are twisted in one direction so that there is a uniform twist of one complete turn in a length of approximately 20 mm.

The conductor is inserted into the clamping means of the terminal for the minimum distance prescribed or, where no distance is prescribed, until it just projects from the far side of the terminal and in the position most likely to allow the wire to escape.

The clamping screw(s) or nut(s) is (are) then tightened with a torque equal to two-thirds of the torque shown in the appropriate column of Table 5.

After the test, no wire of the conductors shall have escaped outside the clamping unit thus reducing creepage distances and clearance distances to values lower than those indicated in Table 23.

12.2.8 Terminals with screw clamping shall be so fixed or located within the switch that, when the clamping screws or nuts are tightened or loosened, the terminals shall not work loose from their fixing to the switch.

Movement of the terminal is allowed as long as it is sufficiently limited so as to prevent non-compliance with this document.

The use of sealing compound or resin is considered to be sufficient for preventing a terminal from working loose, provided that:

– the sealing compound or resin is not subject to stress during normal use, and
– the effectiveness of the sealing compound or resin is not impaired by temperatures attained by the terminal under the most unfavourable conditions specified in this document.

Compliance is checked by inspection, by measurement and by the following test:

A solid rigid copper conductor of the largest cross-sectional area specified in Table 4 is placed in the terminal.

Where rigid solid conductors do not exist, the test may be made with rigid stranded conductors.

Before insertion into the clamping means of the terminal, wires of rigid (solid or stranded) are straightened; rigid stranded conductors may, in addition, be twisted to restore them approximately to their original shape.

The conductor is inserted into the clamping means of the terminal for the minimum distance prescribed or, where no distance is prescribed, until it just projects from the far side of the terminal and in the position most likely to allow the wire to escape.

Screws and nuts are tightened and loosened five times by means of a suitable test screwdriver or spanner, the torque applied when tightening being equal to the torque shown in the appropriate column of Table 5 or in the table of the appropriate Figures 1 to 4, whichever is the highest.

A new conductor end is used each time the screw or nut is loosened.

International Electrotechnical Commission
Provided by IHS under license with IEC
No reproduction or networking permitted without license from IHS

Where a screw has a hexagonal head with a slot and the values in columns 3 and 5 of Table 5 are different, the test is made twice, first on a set of three specimens applying to the hexagonal head the torque specified in column 5 and then on another set of three specimens, applying the torque specified in column 3 by means of a screwdriver. If the values in columns 3 and 5 are the same, only the test with the screwdriver is made.

During the test, terminals shall not work loose and there shall be no damage, such as breakage of screws or damage to the heads, slots (rendering the use of the appropriate screwdriver impossible), threads, washers or stirrups that will impair the further use of the terminals.

For mantle terminals the specified nominal diameter is that of the slotted stud.

The shape of the blade of the test screwdriver shall suit the head of the screw to be tested. The screws and nuts shall be tightened in one smooth and continuous application of the torque.

12.2.9 Clamping screws or nuts of earthing terminals with screw clamping shall be adequately locked against accidental loosening and it shall not be possible to loosen them without the aid of a tool.

Compliance is checked by manual test.

In general, the designs of terminals shown in Figures 1, 2, 3, 4 and 5 provide sufficient resiliency to comply with this requirement; for other designs, special provisions, such as the use of an adequately resilient part which is not likely to be removed inadvertently, may be necessary.

12.2.10 Earthing terminals with screw clamping shall be such that there is no risk of corrosion resulting from contact between these parts and the copper of the earthing conductor, or any other metal that is in contact with these parts.

The body of the earthing terminals shall be of brass or other metal no less resistant to corrosion, unless it is a part of the metal frame or enclosure, when the screw or nut shall be of brass or other metal no less resistant to corrosion.

If the body of the earthing terminal is a part of a frame or enclosure of aluminium alloy, precautions shall be taken to avoid the risk of corrosion resulting from contact between copper and aluminium or its alloys.

Compliance is checked by inspection.

NOTE Screws or nuts of plated steel withstanding the corrosion test are considered to be of a metal no less resistant to corrosion than brass.

12.2.11 In case where the figures are used to verify the requirements of 12.2.1, the following applies.

For pillar terminals, the distance between the clamping screw and the end of the conductor, when fully inserted, shall be at least that specified in Figure 1.

NOTE The minimum distance between the clamping screw and the end of the conductor applies only to pillar terminals in which the conductor cannot pass right through.

For mantle terminals, the distance between the fixed part and the end of the conductor, when fully inserted, shall be at least that specified in Figure 5.

International Electrotechnical Commission
Provided by IHS under license with IEC
No reproduction or networking permitted without license from IHS

Compliance is checked by measurement, after a solid conductor of the largest nominal cross-sectional area specified, for the appropriate rated current in Table 4, has been fully inserted and fully clamped.

12.2.12 Lug terminals shall be used only for switches having a rated current of 40 A or greater; if such terminals are provided, they shall be fitted with spring washers or equally effective locking means.

Compliance is checked by inspection.

12.3 Screwless terminals for external copper conductors

12.3.1 Screwless terminals may be of the type suitable for rigid copper conductors only or of the type suitable for both rigid and flexible copper conductors.

Terminals suitable for rigid conductors only are checked with rigid solid conductors and on a new set of specimens with rigid stranded conductors, if existing.

NOTE "if existing" means that the conductor is available in the market where the product is sold and installed.

For screwless terminals suitable for both rigid and flexible copper conductors, the tests are carried out with rigid conductors first and then repeated with flexible conductors.

12.3 is not applicable to switches provided with:

– screwless terminals requiring the fixing of special devices to the conductors before clamping in the screwless terminal, for example flat push-on connectors;
– screwless terminals requiring twisting of the conductors, for example those with twisted joints;
– screwless terminals providing direct contact to the conductors by means of edges or points penetrating the insulation.

12.3.2 Screwless terminals shall be provided with clamping units which allow the proper connection of rigid or of rigid and flexible copper conductors having nominal cross-sectional areas as shown in Table 8.

Table 8 – Relationship between rated currents and connectable cross-sectional areas of copper conductors for screwless terminals

Rated current A	Conductors		
	Nominal cross-sectional areas mm^2	Diameter of largest rigid conductor mm	Diameter of largest flexible conductor mm
Up to and including 4[a]	0,75 to 1,5	1,5	1,8
Above 4 and including 6	1 to 1,5	1,5	1,8
Above 6 and including 16[b]	1,5 to 2,5	2,2	2,4
NOTE In the following country, the largest diameter of flexible conductors above 6 A and including 16 A is 2,21 mm: CH.			
[a] For special purposes such as ELV applications, conductors from 0,5 mm^2 up to 1 mm^2 inclusive can be used. [b] Each supply terminal of switches other than those of pattern numbers 3, 03 and 7 shall allow the connection of two 2,5 mm^2 conductors. In such cases a terminal with separate independent clamping means for each conductor shall be used.			

Compliance is checked by inspection and by fitting conductors of the smallest and largest cross-sectional areas specified.

International Electrotechnical Commission
Provided by IHS under license with IEC
No reproduction or networking permitted without license from IHS

12.3.3 Screwless terminals shall allow the conductor to be connected without special preparation.

Compliance is checked by inspection.

NOTE The term "special preparation" covers soldering of the wires of the conductor, use of terminal ends, etc., but not the reshaping of the conductor before introduction into the terminal or the twisting of a flexible conductor to consolidate the end.

12.3.4 Parts of screwless terminals mainly intended for carrying current shall be of materials as specified in 22.5.

Compliance is checked by inspection or by chemical analysis.

NOTE Springs, resilient units, clamping plates and the like are not considered as parts mainly intended for carrying current.

12.3.5 Screwless terminals shall be so designed that they clamp the specified conductors with sufficient contact pressure and without undue damage to the conductor.

The conductor shall be clamped reliably and between metal surfaces.

Compliance is checked by inspection and by the test of 12.3.10.

12.3.6 It shall be clear how the connection and disconnection of the conductors is to be made.

The intended disconnection of a conductor shall require an operation, other than a pull on the conductor, so that it can be made manually with or without the help of a general purpose tool.

It shall not be possible to confuse the opening intended for the use of a tool to assist the connection or disconnection with the opening intended for the conductor.

In case the screwless terminal is intended for flexible conductors, the system shall allow release of the opening of the contact in order to allow the introduction and the disconnection of all the wires of the flexible conductor.

Compliance is checked by inspection and by the following tests which are performed on new specimens:

Screwless-type clamping units are tested with the relevant conductors as given in 12.3.2 having the largest diameter.

Five insertions and disconnections are made with each type of conductor for which the clamping unit is intended to be used.

New conductors are used each time, except for the fifth time, when the conductor used for the fourth insertion is clamped at the same place. For each insertion, the conductors are either pushed as far as possible into the clamping unit or are inserted so that adequate connection is obvious. After each insertion the conductor is twisted through 90° and subsequently disconnected. After these tests, the clamping units shall not be damaged in such a way as to impair their further use.

12.3.7 Screwless terminals which are intended to be used for the interconnection of two or more conductors shall be so designed that:

– each conductor is clamped individually;

NOTE The clamping of one of the conductors is independent of the clamping of the other conductor(s).

International Electrotechnical Commission
Provided by IHS under license with IEC
No reproduction or networking permitted without license from IHS

– during the connection or disconnection, the conductors can be connected or disconnected either at the same time or separately;
– each conductor is introduced in a separate clamping unit (not necessarily in separate holes).

It shall be possible to clamp securely any number of conductors up to the maximum as designed.

Compliance is checked by inspection and by manual tests with the appropriate conductors (in number and size).

12.3.8 Screwless terminals shall be so designed that adequate insertion of the conductor is obvious and over-insertion is prevented if further insertion is liable to reduce the creepage distances and/or clearances required in Table 23, or to influence the operation of the switch.

Compliance is checked by inspection and by the test of 12.3.10.

12.3.9 Screwless terminals shall be properly fixed to the switch.

They shall not work loose when the conductors are connected or disconnected during installation.

Compliance is checked by inspection and by the test of 12.3.10.

Covering with sealing compound without other means of locking is not sufficient. However, self-hardening resins may be used to fix terminals which are not subject to mechanical stress in normal use.

12.3.10 Screwless terminals shall withstand the mechanical stresses occurring in normal use.

Compliance is checked by the following tests which are performed on three specimens of each type of terminal which has been used for 12.3.2.

Terminals suitable for rigid conductors only are checked with rigid solid conductors and on a new set of specimens with rigid stranded conductors, if existing.

NOTE "if existing" means that the conductor is available in the market where the product is sold and installed.

Terminals suitable for rigid and flexible conductors are checked with rigid conductors as above and on a new set of specimens with flexible conductors.

The terminal is placed in the test apparatus according to Figure 9.

The terminal is fitted first with

a) the maximum number of conductors of the largest nominal cross-sectional area of the same type;

Then the test is repeated with

b) the maximum number of conductors of the smallest nominal cross-sectional area of the same type,

according to Table 8.

If the terminal is fitted with more than one conductor, the test is done on each of the conductors consecutively.

International Electrotechnical Commission
Provided by IHS under license with IEC
No reproduction or networking permitted without license from IHS

The length of the test conductor shall be at least 75 mm longer than the height H specified in Table 6.

The test conductor is then connected in the clamping unit in the intended manner.

The end of the conductor shall be passed through an appropriate sized bushing in a platen positioned at a height H below the equipment as given in Table 6. The bushing shall be positioned, in a horizontal plane, such that its centre line describes a circle of 75 mm diameter, concentric with the centre of the clamping unit, in the horizontal plane; the platen is then rotated at a rate of (10 ± 2) r/min.

The distance between the mouth of the clamping unit and the upper surface of the bushing shall be within 15 mm of the height in Table 6. The bushing may be lubricated to prevent binding, twisting or rotation of the insulated conductor.

Each conductor introduced in the screwless terminal is subjected for 15 min to a circular motion with (10 ± 2) r/min using an apparatus, an example of which is shown in Figure 9. The conductor is subjected to a pull having a value shown in Table 6.

During the test the conductors shall not move noticeably in the clamping unit.

After each rotation test, the pulling force given in Table 7 shall be applied to the conductor under test. The force shall be applied in one smooth and continuous application, for 1 min, in the direction of the axis of the conductor.

During the test, the rigid conductor, or any wire of rigid stranded or flexible conductor, shall neither slip out of the clamping unit nor break near the clamping unit, nor shall the conductor be damaged in such a way as to render it unfit for further use.

In the case of the flexible conductor, the break of a few wires shall not be taken into account provided it does not exceed 15 % of the original number of wires.

After these tests, neither the terminals nor the clamping means shall have worked loose and the conductors shall show no deterioration impairing their further use.

12.3.11 Screwless terminals shall withstand the electrical and thermal stresses occurring in normal use.

Compliance is checked by the following tests a) and b), which are carried out on five screwless terminals of accessories which have not been used for any other test.

Both tests are carried out with new copper conductors.

a) For screwless terminals accepting rigid solid conductors, the test is carried out by loading the screwless terminals for 1 h with an alternating current (DC current and extra low voltage may be used) as specified in Table 9 and connecting rigid solid conductors 1 m long having the nominal cross-sectional area as specified in the same table.

The test is carried out on each clamping unit.

International Electrotechnical Commission
Provided by IHS under license with IEC
No reproduction or networking permitted without license from IHS

Table 9 – Test current for the verification of electrical and thermal stresses in normal use for screwless terminals

Rated current A	Test current A	Nominal cross-sectional area of the conductor mm^2
Up to and including 4	9	0,75
Above 4 and including 6	13,5	1
Above 6 and including 13	17,5	1,5
Above 13 and including 16	22	2,5

During the test, the current is not passed through the accessories but only through the terminals.

Immediately after this period, the voltage drop across each screwless terminal is measured with rated current flowing.

In no case shall the voltage drop exceed 15 mV.

The measurements are made across each screwless terminal and as near as possible to the place of contact.

If the back connection of the terminal is not accessible, the second connecting point in the case of two-way switches may be used for the returning wire; in the case of one-way switches the specimens may be adequately prepared by the manufacturer; care should be taken not to affect the behaviour of the terminal.

Care should be taken to ensure that, during the period of the test, including the measurements, the conductors and the measurement devices are not moved noticeably.

b) The screwless terminals already subjected to the determination of the voltage drop specified in the previous test a) are tested as follows.

During the test, a current equal to the test current value given in Table 9 is passed.

The whole test arrangement, including the conductors, shall not be moved until the measurements of the voltage drop have been completed.

The terminals are subjected to 192 temperature cycles, each cycle having a duration of approximately 1 h and carried out as follows:

- *the current flows for approximately 30 min;*
- *for a further period of approximately 30 min no current flows.*

The voltage drop in each screwless terminal is determined as prescribed for the test of a) and is done at the following moments:

- *after the first 24 temperature cycles and after the 192 temperature cycles;*
- *additional measurements to be done after any three of the following temperature cycles: after the 48th, 72nd, 96th, 120th, 144th or 168th temperature cycles.*

In no case shall the voltage drop exceed 22,5 mV or twice the value measured after the 24th cycle, whichever is the smaller.

International Electrotechnical Commission
Provided by IHS under license with IEC
No reproduction or networking permitted without license from IHS

After this test an inspection by normal or corrected vision without additional magnification shall show no changes evidently impairing further use such as cracks, deformations or the like.

12.3.12 Screwless terminals shall be so designed that the connected rigid conductor remains clamped, even when it has been deflected during normal installation, for example during mounting in a box, and the deflecting stress is transferred to the clamping unit.

This test need not be carried out with flexible conductors.

Compliance is checked by the following test which is made on three specimens of switches which have not been used for any other test.

Terminals are checked with rigid solid and rigid stranded conductors, if existing.

NOTE 1 "if existing" means that the conductor is available in the market where the product is sold and installed.

The test apparatus, the principle of which is shown in Figure 10a, shall be so constructed that:

- *a specified conductor properly inserted into a terminal is allowed to be deflected in any of the 12 directions differing from each other by 30°, with a tolerance referred to each direction of ±5°, and*
- *the starting point can be varied by 10° and 20° from the original point.*

A reference point need not be specified.

The deflection of the conductor from its straight position to the testing positions shall be effected by means of a suitable device applying a specified force to the conductor at a certain distance from the terminal.

The deflecting device shall be so designed that:

- *the force is applied in the direction perpendicular to the undeflected conductor;*
- *the deflection is attained without rotation or displacement of the conductor within the clamping unit, and*
- *the force remains applied while the prescribed voltage drop measurement is made.*

Provision shall be made so that the voltage drop across the clamping unit under test can be measured when the conductor is connected, as shown for example in Figure 10b.

The specimen is mounted on the fixed part of the test apparatus in such a way that the specified conductor inserted into the clamping unit under test can be freely deflected.

To avoid oxidation, the insulation of the wire shall be removed immediately before starting the test.

NOTE 2 If necessary, the inserted conductor can be permanently bent around obstacles, so that these do not influence the results of the test.

NOTE 3 In some cases, with the exception of the case of guidance for the conductor, it may be advisable to remove those parts of the specimens which do not allow the deflection of the conductor corresponding to the force to be applied.

A clamping unit is fitted as for normal use with a rigid solid copper conductor having the smallest cross-sectional area specified in Table 10 and is submitted to a first test sequence. The same clamping unit is submitted to a second test sequence using the conductor having the largest cross-sectional area, unless the first test sequence has failed.

International Electrotechnical Commission
Provided by IHS under license with IEC
No reproduction or networking permitted without license from IHS

The force for deflecting the conductor is specified in Table 11, the distance of 100 mm being measured from the extremity of the terminal, including the guidance, if any, for the conductor, to the point of application of the force to the conductor.

Table 10 – Cross-sectional areas of rigid copper conductors for deflection test of screwless terminals

Rated current of the switch A	Cross-sectional area of the test conductor mm^2	
	1st test sequence	2nd test sequence
≤ 6	1,0[a]	1,5
Above 6 up to and including 16	1,5	2,5
[a] Only for countries allowing the use of 1,0 mm^2 conductors in fixed installations.		

Table 11 – Deflection test forces

Cross-sectional area of the test conductor mm^2	Force for deflecting the test conductor[a] N
1,0	0,25
1,5	0,5
2,5	1,0
[a] The forces are chosen so that they stress the conductors close to the limit of elasticity.	

The test is made with continuous current (i.e. the current is not switched on and off during the test). A suitable power supply should be used and an appropriate resistance should be inserted in the circuit so that the current variations are kept within ±5 % during the test.

A test current equal to the rated current of the switch is passed through the clamping unit under test. A force according to Table 11 is applied to the test conductor inserted in the clamping unit under test in one of the 12 directions shown in Figure 10a and the voltage drop across this clamping unit is measured. The force is then removed.

The force is then applied successively in each one of the remaining 11 directions shown in Figure 10a following the same test procedure.

If for any of the 12 test directions the voltage drop is greater than 25 mV, the force is maintained in this direction until the voltage drop is reduced to a value below 25 mV, but for not more than 1 min. After the voltage drop has reached a value below 25 mV, the force is maintained in the same direction for a further period of 30 s, during which period the voltage drop shall not have increased.

The other two specimens of switches of the set are tested following the same test procedure, but moving the 12 directions of the force so that they differ by approximately 10° for each specimen. If one specimen has failed at one of the directions of application of the test force, the tests are repeated on another set of specimens, all of which shall comply with the repeated tests.

22 Screws, current-carrying parts and connections

22.1 General

Add the following requirement after the third paragraph:

International Electrotechnical Commission
Provided by IHS under license with IEC
No reproduction or networking permitted without license from IHS

The requirements of Clause 22 are not applicable to terminals unless otherwise mentioned. The requirements for the verification of terminals are given in Clause 12.

Replace the fourth paragraph by the following:

Compliance is checked by inspection and, for screws and nuts transmitting contact pressure or which are operated when connecting up the accessory, by the following test.

Delete NOTE 1.

Replace the seventh paragraph by the following:

The test is made by means of a suitable test screwdriver or a suitable tool, applying the relevant torque as specified in Table 5.

Delete the eighth paragraph:

The conductor is moved each time the screw or nut is loosened.

Dimensions in millimetres

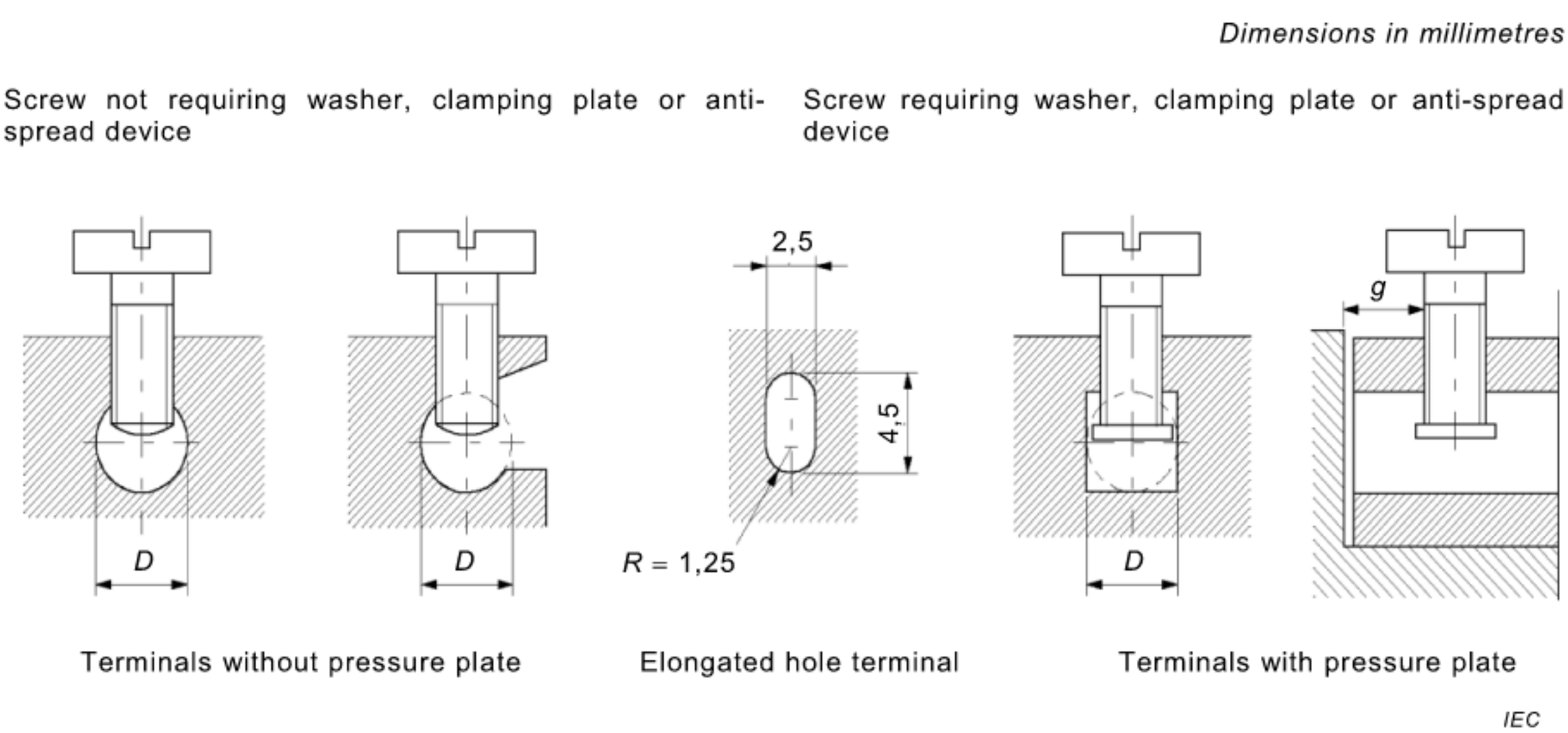

Figure 1 – Pillar terminals

Replace Figure 1 with the following new Figure 1, which includes modified minimum diameter values for 10 mm², 16 mm² and 25 mm² cross-sections:

International Electrotechnical Commission
Provided by IHS under license with IEC
No reproduction or networking permitted without license from IHS

Cross-section of conductor accepted by the terminal mm^2	Minimum diameter *D* (or minimum dimensions) of conductor space mm	Minimum distance *g* between clamping screw and end of conductor when fully inserted mm		Torque Nm					
				1[a]		3[a]		4[a]	
		One screw	Two screws	One screw	Two screws	One screw	Two screws	One screw	Two screws
Up to 1,5	2,5	1,5	1,5	0,2	0,2	0,2	0,4	0,4	0,4
2,5 (circular hole)	3,0	1,5	1,5	0,25	0,2	0,5	0,4	0,5	0,4
2,5 (elongated hole)	2,5 × 4,5	1,5	1,5	0,25	0,2	0,5	0,4	0,5	0,4
4	3,6	1,8	1,5	0,4	0,2	0,8	0,4	0,7	0,4
6	4,0	1,8	1,5	0,4	0,25	0,8	0,5	0,8	0,5
10	5,2	2,0	1,5	0,7	0,25	1,2	0,5	1,2	0,5
16	6,4	2,5	2,0	0,8	0,7	2,0	1,2	2,0	1,2
25	7,9	3,0	2,0	1,2	0,7	2,5	1,2	3,0	1,2

[a] The values specified apply to the screws covered by the corresponding columns in Table 5.

International Electrotechnical Commission
Provided by IHS under license with IEC
No reproduction or networking permitted without license from IHS

Annex C
(informative)

Circuit development (19.3)

C.1 Rationale

Due to the phasing out of incandescent lamps and the replacement of these lamps by self ballasted lamps, a joint forum between IEC technical committees 23B, 34A, 77A and 17B was formed to discuss the technical consequences of this change.

One of the main impacts for switches is the change in inrush currents when switching these energy efficient lamps in comparison to incandescent lamps.

The joint forum fixed the maximum values for one lamp. The source impedance Z_{mains} as shown in Table C.1 was added to be able to test the lamp. This will be covered by the lamp standards (for example IEC 60969).

Table C.1 – Lamp

P [W]	V_{mains} [Vrms]	I_{peak} [A]	I^2t [A^2s]	Z_{mains}
$P \leq 15$	120	60	0,5	0,450 Ω + 100 μH
$P \leq 15$	230	20	0,08	0,2 Ω + 400 μH
$15 < P \leq 25$	120	60	0,5	0,450 Ω + 100 μH
$15 < P \leq 25$	230	35	0,15	0,2 Ω + 400 μH

The value of I_{peak} and I^2t shown in Table C.1 represent the highest value that can occur at the moment the contact mechanism closes.

C.2 I_{peak} and I^2t for normal operation tests

C.2.1 General

Where 19.2 in IEC 60669-1:1998 and IEC 60669-1:1998/AMD2:2006 is based on the principle to define an equivalent circuit which results in an I_{peak} and I^2t value, 19.3 in this document uses the values of I_{peak} and I^2t as the reference. This approach has been preferred, as within testing environments it is not always possible to reach the ideal parameters of Z_{mains}. In this approach equivalent circuits can be adjusted to reach the required values within the tolerances given in this document.

C.2.2 Switching a single lamp

For the purpose of this test the lamp with a P = 15 W has been used. This load results in the higher I_{peak}/W ratio compared to the 25 W lamp and is used for C.2.3 when added to get higher loads.

For the calculation a prospective short circuit current of 3 000 A was used which was considered adequate.

The R and C values of the equivalent circuit of the lamps in Figure C.1 and Figure C.2 are calculated from Table C.1.

The Z_{mains} of these networks are:

International Electrotechnical Commission
Provided by IHS under license with IEC
No reproduction or networking permitted without license from IHS

– (120 V; 60 Hz; I_{pscc} = 3 000 A; cos φ = 0,9):
  0,036 Ω + 46,25 μH + cables 0,25 Ω + 20 μH = 0,286 Ω + 66,25 μH
– (230 V; 50 Hz; I_{pscc} = 3 000 A; cos φ = 0,9):
  0,069 Ω + 106 μH + cables 0,25 Ω + 20 μH = 0,319 Ω + 126 μH

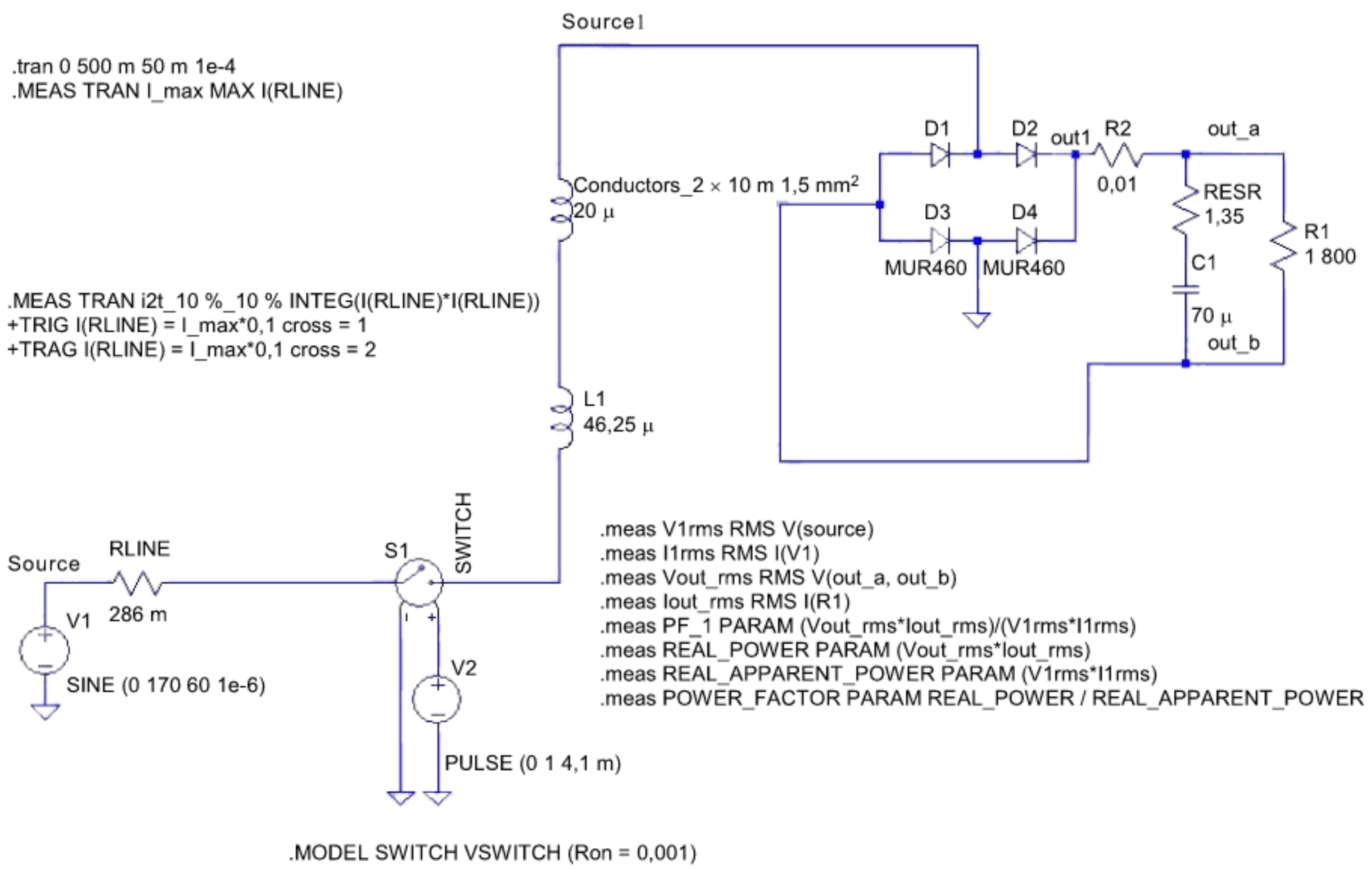

Figure C.1 – 120 V 15 W (LT spice model)

International Electrotechnical Commission
Provided by IHS under license with IEC
No reproduction or networking permitted without license from IHS

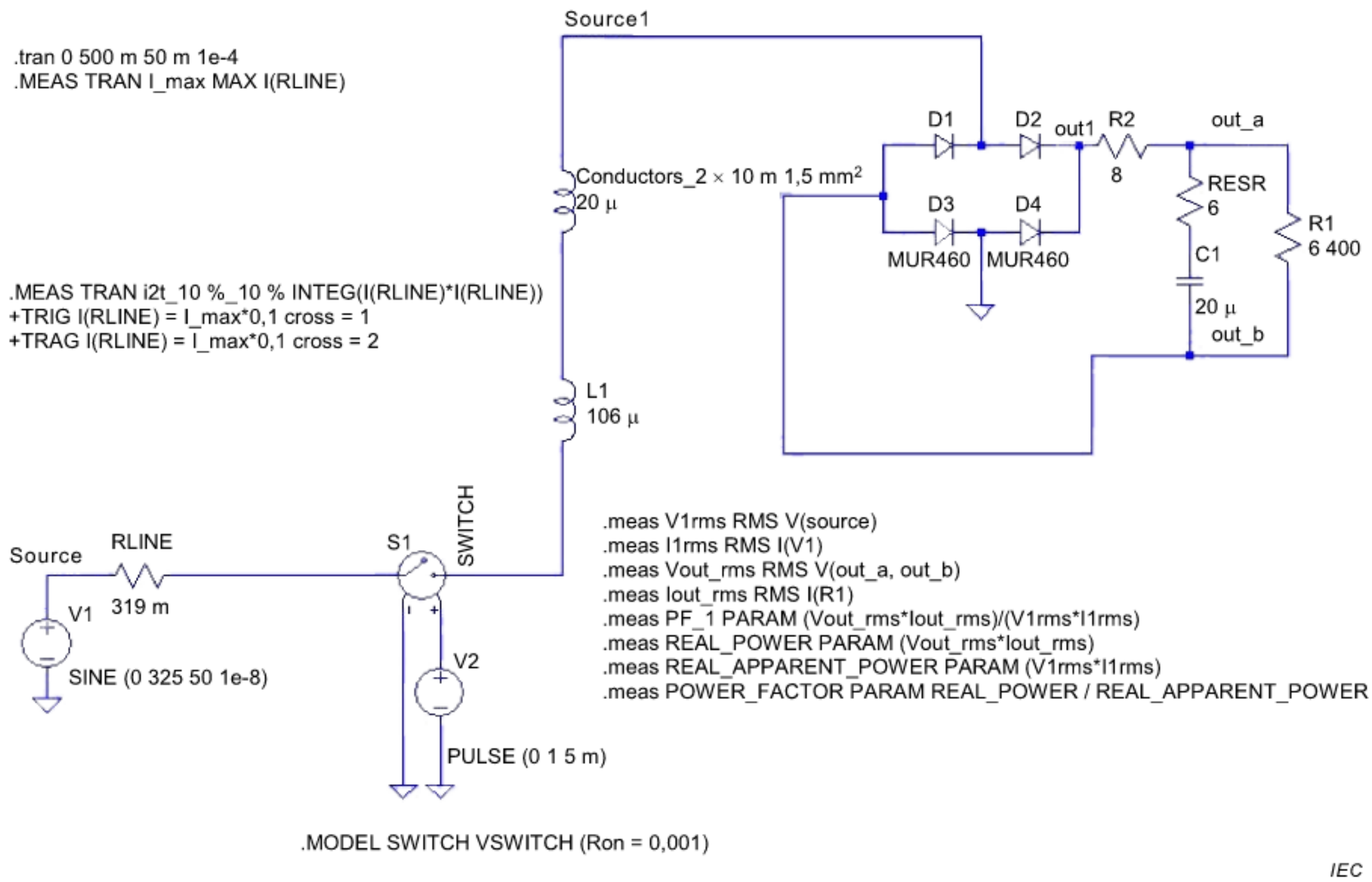

Figure C.2 – 230 V 15 W (LT spice model)

Attention: R1 in Figures C.1 and C.2 is not the R_1 of Figure 12.

C.2.3 Switching multiple lamps

Multiple lamp loads, an example of which is shown in Figure C.3, are obtained by combining single lamps with a power of 15 W.

The I_{peak} and I^2t values (see Figure C.4) for multiple lamps are based on the following principles:

– Up to 60 W (four lamps) the worst conditions apply:
  - 15 W lamps which give the highest I_{peak} and I^{2t} value as given in Table C.1;
  - the network impedance as given in C.2.2.
– For higher power lamp loads:
  - for every three additional lamps 3 m of cables have been added (75 mΩ + 6 µH);
  - the bulk capacitor within each additional lamp uses the nominal value and not the worst case as given in Table C.1;
  - the values have been interpolated to fit the nominal values of Table 19.

International Electrotechnical Commission
Provided by IHS under license with IEC
No reproduction or networking permitted without license from IHS

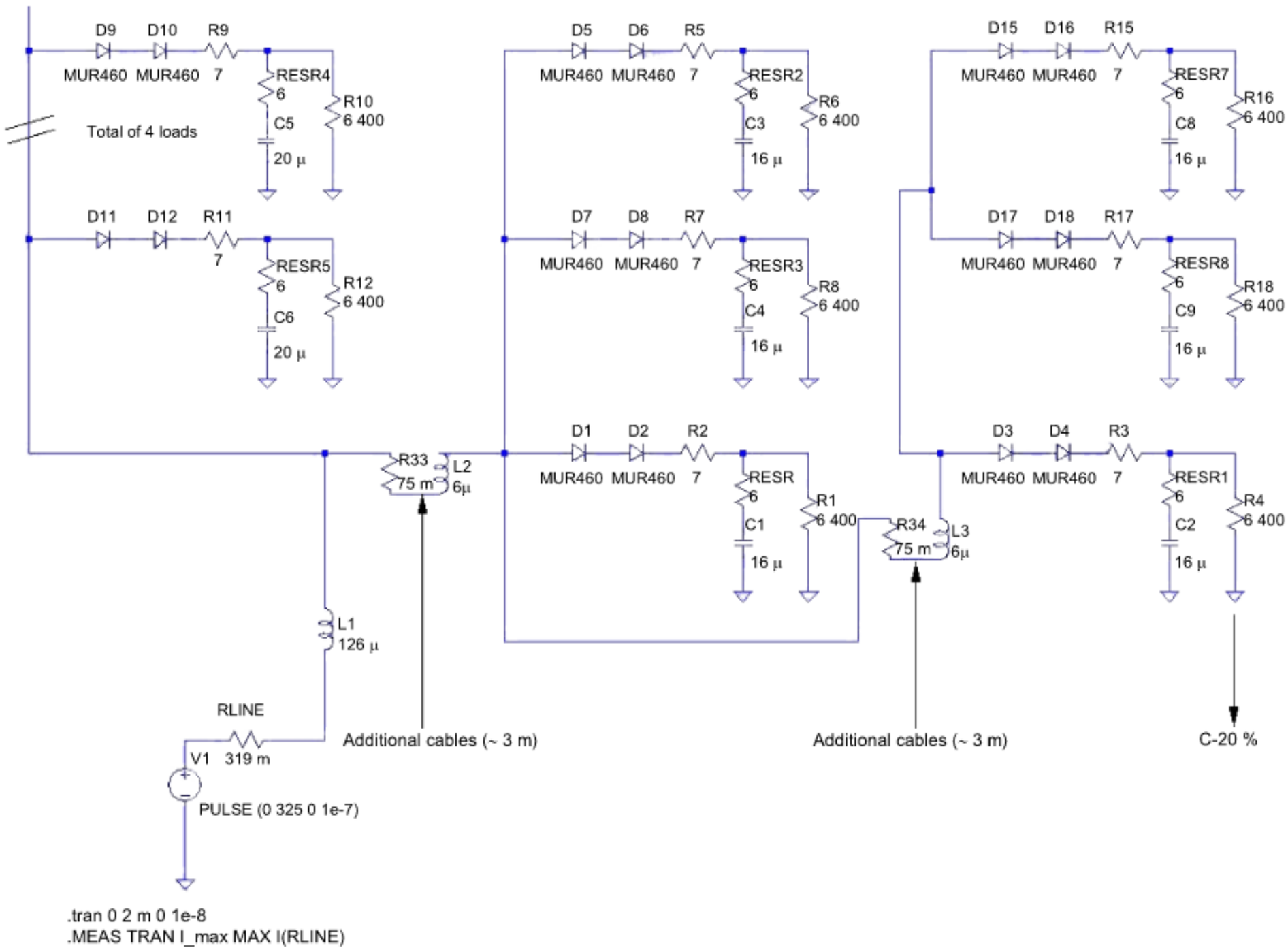

Figure C.3 – Model for multiple lamp loads

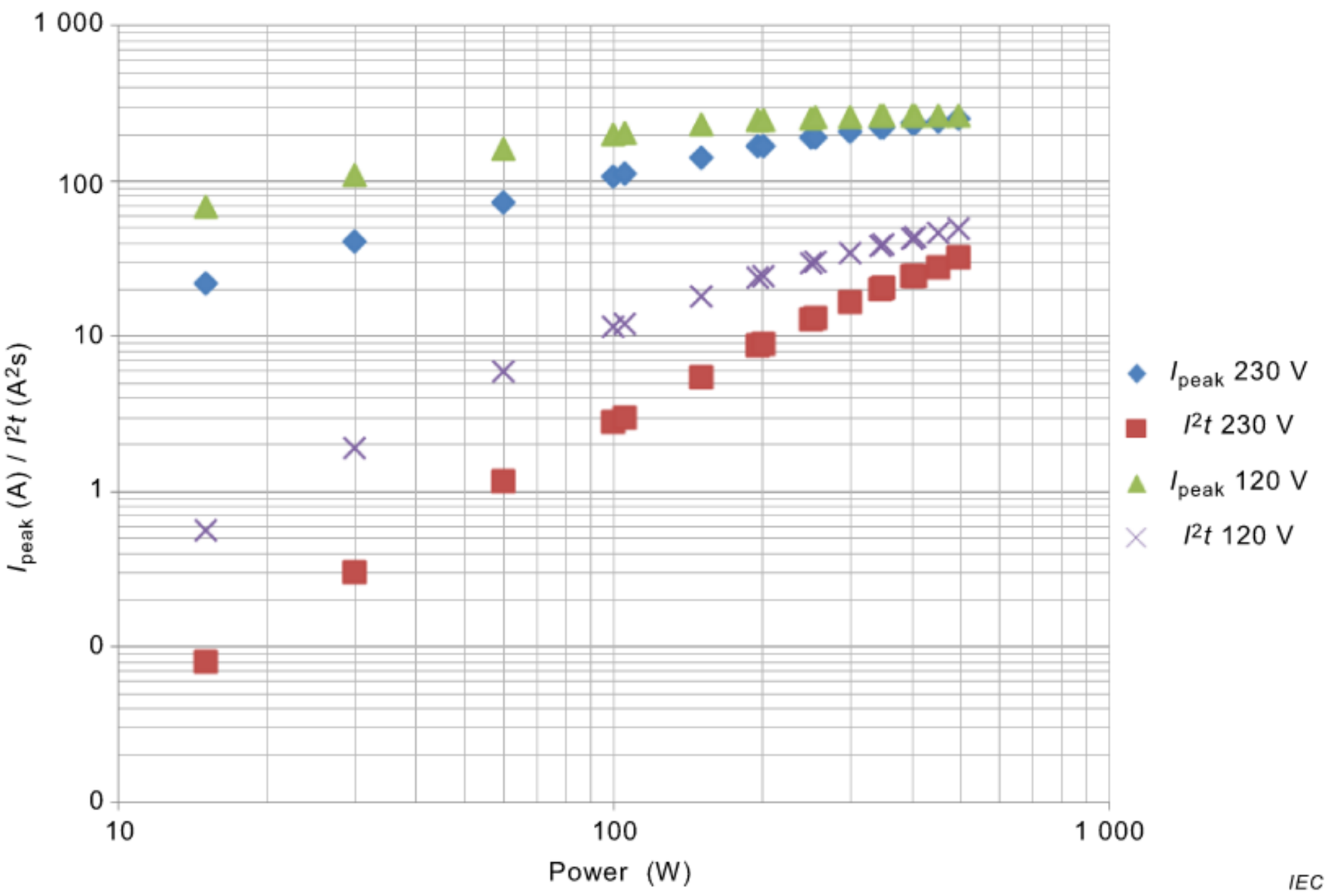

Figure C.4 – I_{peak} and I^2t for multiple lamp loads

International Electrotechnical Commission
Provided by IHS under license with IEC
No reproduction or networking permitted without license from IHS

Annex D
(informative)

Additional requirements for insulation-piercing terminals

Annex D is provided for information to show the changes planned for the future to introduce requirements for insulation-piercing terminals into IEC 60669-1.

The purpose of Annex D is to bring additional explanations and requirements to the normative text of this document. Therefore the numbering of clauses, subclauses, figures and tables follows that of the main body of the text. Only the relevant clauses, subclauses, tables and figures are cited. Any additional tables and figures are numbered starting from D.

Annex D is written in such a way that it will amend the main text, when the requirements for IPT are incorporated.

1 Scope

Replace the second paragraph by:

For switches provided with screwless terminals or insulation-piercing terminals, the rated current is limited to 16 A.

3 Terms and definitions

Add the following new definitions:

3.24
insulation-piercing terminal
IPT
connecting device for the connection and possible disconnection of one conductor or two or more conductors, the connection being made by piercing, boring through, cutting through, removing, displacing or making ineffective in some other manner the insulation of the conductor(s) without previous stripping

Note 1 to entry: The removal of the sheath of the cable, if necessary, is not considered as a previous stripping.

Note 2 to entry: Examples of insulation-piercing terminals are given in Figure D.1.

3.24.1
reusable insulation-piercing terminal
insulation-piercing terminal that can be used more than once

3.24.2
non-reusable insulation-piercing terminal
insulation-piercing terminal that can be used only once

Note 1 to entry: The accessory can only be removed from the circuit by cutting the conductors or when removing the accessory, it is damaged in such a way that it can not be reused.

3.25
clamping unit
part(s) of a terminal necessary for the mechanical clamping and the electrical connection of the conductor(s), including the parts which are necessary to ensure correct contact pressure

International Electrotechnical Commission
Provided by IHS under license with IEC
No reproduction or networking permitted without license from IHS

5 General remarks on tests

Add the following Table D.1 at the end of Clause 5:

Table D.1 – Specimens needed for Clause 12 for insulation-piercing terminals (IPTs)

Subclause	Reusable	Non-reusable
12.4.2	2 new terminals of each type of construction	2 new terminals of each type of construction
12.4.3	4 new terminals of each type of construction	NA
12.4.10	6 new terminals[a] of each type of construction previously submitted to the test of 15.1	6 or 12 new terminals of each type of construction previously submitted to the test of 15.1
12.4.11	12 new terminals of each type of construction	12 new terminals of each type of construction

[a] The terminals of specimens "ABC" shall be used. If more terminals are necessary, new specimens which have been previously submitted to the test of 15.1 may be used.

NOTE If the IPT is declared as suitable for stripped and unstripped conductors, the specimens needed are twice the number of specimens shown in the table, except for 12.4.3.

7 Classification

7.8 according to the type of terminal:

Add the following new list items at the end:

– switches with IPTs for rigid conductors only;
– switches with IPTs for rigid and flexible conductors.

Add the following new numbered paragraphs:

7.10 IPT classification according to the method of making the connection

– with a general purpose tool;
– with a special tool; only allowed for non-reusable IPT;
– by hand.

7.11 IPT classification according to reusability:

– reusable IPTs;
– non-reusable IPTs.

Switches provided with non-reusable IPTs can only be used in trunking systems according to IEC 61084 (all parts).

8 Marking

8.1 General

Add the following new list item after m):

n) length of the conductor to be inserted into the IPT, if applicable.

Add the following new subclause:

International Electrotechnical Commission
Provided by IHS under license with IEC
No reproduction or networking permitted without license from IHS

8.9 Manufacturer information

The following shall be indicated on the manufacturer's documentation for IPTs:

– the connection and disconnection procedure, if necessary;
– the method of connection according to 7.1.10, if necessary;
– for non-reusable IPTs, information that the product shall only be used in cable trunking systems and how the product shall be installed in order to have the possibility to replace it without impairing the safety of the installation;
– an indication that the switch is equipped with non-reusable IPTs, if applicable;
– a clear information that the conductor shall not be stripped before connecting it to the terminal, unless the manufacturer has designed the product for this purpose.

12 Terminals

12.1 General

Replace the first paragraph by the following:

Switches shall be provided with either terminals having screw clamping, screwless terminals, or insulation-piercing terminals (IPTs).

Replace the third paragraph by the following:

The tests of 12.2.8, 12.3.9 (including the test of 12.3.10), and 12.4.9 (including the test of 12.4.10) shall be carried out after the test of 15.1.

Replace the fourth paragraph by the following:

Compliance is checked by inspection and by the tests of 12.2 or 12.3 or 12.4, as applicable.

Add the following new subclause:

12.4 IPTs for external copper conductors

12.4.1 IPTs shall be of the type suitable for rigid copper conductors only or shall be of the type suitable for both rigid and flexible conductors.

12.4.2 IPTs shall be provided with clamping units which allow the proper connection of rigid or of rigid and flexible copper conductors having nominal cross-sectional areas as shown in Table D.2. IPTs shall accept insulated conductors having the maximum outer diameter specified in Table D.2 or as specified by the manufacturer for other insulation types.

It shall be possible to connect an unprepared conductor into the IPTs.

The construction of IPTs shall be such that the contact pressure is transmitted by metallic parts. An IPT where the contact pressure is transmitted only through insulating material is not allowed.

International Electrotechnical Commission
Provided by IHS under license with IEC
No reproduction or networking permitted without license from IHS

Table D.2 – Relationship between rated currents and connectable cross-sectional areas of copper conductors for insulation-piercing terminals

Rated current A	Nominal cross-sectional areas mm^2	Conductors		Isolated conductor	
		Diameter of the largest rigid conductor mm	Diameter of the largest flexible conductor mm	Outer diameter of the largest rigid stranded conductor 60227 IEC 01 mm	Outer diameter of the largest flexible conductor 60227 IEC 08 mm
Up to and including 4[a]	0,75 to 1,5	1,7	1,8	3,3	3,4
Above 4 and including 6	1 to 1,5	1,7	1,8	3,3	3,4
Above 6 and including 16[b]	1,5 to 2,5	2,2	2,4	4,0	4,1
NOTE These values are based on PVC isolated conductors according to IEC 60227 (all parts); for rubber isolated conductors according to IEC 60245 (all parts) other values can apply.					

[a] For special purposes such as ELV applications, conductors from 0,5 mm^2 up to 1 mm^2 inclusive can be used.

[b] Each switch other than those of pattern numbers 3 and 03 shall be designed to permit the continuity of the supply line. This can be achieved by a terminal with separate independent clamping units for each conductor.

Compliance is checked for each type of terminal construction by inspection made by measurement and/or by fitting conductors of the smallest and largest cross-sectional areas of all kinds of conductor accepted by the terminal, and when applicable, with unstripped and stripped conductors.

12.4.3 Reusable IPTs shall be designed in such a way that no insulating material of the conductor remains inside the terminal, impairing their further use if a new conductor is connected and disconnected.

Compliance is checked by connecting and disconnecting five times the same conductor with the largest and smallest cross-sectional area of all kinds of conductor accepted by the terminal as given in Table D.2, rotating the conductor for each application in such a way that it is not connected twice at the same place.

If the insulating material of the conductor remains inside the switch, it shall be possible to withdraw it, and the terminal shall not be damaged in such a way as to impair its further use.

12.4.4 Parts of IPTs mainly intended for carrying current shall be of materials as specified in 22.5.

Compliance is checked by inspection and, if necessary, by chemical analysis.

NOTE Additional springs and the like are not considered as parts mainly intended to carry current.

12.4.5 IPTs shall be so designed that they clamp the specified conductors with sufficient contact pressure and without undue damage to the conductor.

The conductor shall be clamped reliably and between metal surfaces.

Compliance is checked by inspection and by the test of 12.4.10.

12.4.6 The disconnection of a conductor from a reusable IPT shall require an operation other than a pull on the conductor only. It shall be necessary to take deliberate action to disconnect it by hand or with a suitable tool.

International Electrotechnical Commission
Provided by IHS under license with IEC
No reproduction or networking permitted without license from IHS

It shall not be possible to confuse the opening for the use of a tool to assist the connection or disconnection with the opening intended for the connection of the conductor.

Compliance is checked by inspection and by the test of 12.4.10.

12.4.7 IPTs which are intended to be used for the interconnection of two or more conductors shall be so designed that:

– each conductor is clamped individually;

NOTE The clamping of one of the conductors is independent of the clamping of the other conductor(s).

– during the connection or for reusable IPT disconnection, the conductors can be connected or disconnected either at the same time or separately;
– each conductor is introduced in a separate clamping unit (not necessarily in separate holes).

It shall be possible to clamp securely any number of conductors up to the maximum as designed.

Compliance is checked by inspection.

12.4.8 IPTs shall be designed so that adequate insertion of the conductor is obvious and over-insertion is prevented if further insertion is liable to reduce the creepage distances and/or clearances required in Table 21, or to influence the operation of the accessory.

Compliance is checked by inspection.

12.4.9 IPTs shall be properly fixed to the switch.

They shall not work loose when the conductors are connected or disconnected during installation.

Compliance is checked by inspection and by the test of 12.4.10.

Covering with sealing compound without other means of locking is not sufficient. However, self-hardening resins may be used to fix terminals which are not subject to mechanical stress in normal use.

12.4.10 IPTs shall withstand the mechanical stresses occurring in normal use.

For reusable IPT, compliance is checked by the following tests which are performed on one terminal of each type of terminal construction of the three specimens.

Terminals suitable for rigid conductors only are checked with rigid solid and rigid stranded conductors in a new set of specimens, if existing.

NOTE "if existing" means that the conductor is available in the market where the product is intended to be sold and installed.

Terminals suitable for rigid and flexible conductors are checked with rigid solid conductors and on a new set of specimens with flexible conductors.

For non-reusable IPTs for rigid conductors, compliance is checked by the following test which is performed on six specimens of each type of terminal: three with the smallest conductor cross-sectional area and three with the largest conductor cross-sectional area. The same number of specimens is also needed if the IPT is also suitable for flexible conductors.

International Electrotechnical Commission
Provided by IHS under license with IEC
No reproduction or networking permitted without license from IHS

If the terminals are also designed to connect stripped conductors, then all tests need to be repeated on a new set of specimens with stripped conductors.

The terminal is placed in the test apparatus according to Figure 10.

The terminal is fitted first with

a) the maximum number of conductors of the largest nominal cross-sectional area of the same type;

then the test is repeated with

b) the maximum number of conductors of the smallest nominal cross-sectional area of the same type,

according to Table D.2.

If the terminal is fitted with more than one conductor, the test is done on each of the conductors consecutively.

The length of the test conductor shall be at least 75 mm longer than the height H specified in Table 6.

The test conductor is then connected in the clamping unit in the intended manner.

The end of the conductor shall be passed through an appropriate sized bushing in a platen positioned at a height H below the equipment as given in Table 6. The bushing shall be positioned, in a horizontal plane, such that its centre line describes a circle of 75 mm diameter, concentric with the centre of the clamping unit, in the horizontal plane; the platen is then rotated at a rate of (10 ± 2) r/min.

The distance between the mouth of the clamping unit and the upper surface of the bushing shall be within 15 mm of the height in Table 6. The bushing may be lubricated to prevent binding, twisting or rotation of the insulated conductor.

Each conductor introduced in the IPT is subjected for 15 min to a circular motion with (10 ± 2) r/min using an apparatus, an example of which is shown in Figure 10. The conductor is subjected to a pull having a value shown in Table 6.

After each rotation test, the pulling force given in Table 7 shall be applied to the conductor under test. The force shall be applied in one smooth and continuous application, for 1 min, in the direction of the axis of the conductor.

During the test, the rigid solid conductor, or any wire of rigid stranded, or flexible conductor, shall neither slip out of the clamping unit nor break near the clamping unit.

After these tests, neither the terminals nor the clamping means shall have worked loose and the conductors shall show no deterioration impairing their further use.

In the case of the flexible conductor, the break of individual wires of the conductor shall not be taken into account.

In addition, no lack of the insulating material of the conductor shall be observed, in order to be sure that no piece of insulating material has remained inside the terminal.

12.4.11 IPTs shall withstand the electrical and thermal stresses occurring in normal use.

International Electrotechnical Commission
Provided by IHS under license with IEC
No reproduction or networking permitted without license from IHS

Compliance is checked by the following test, which is carried out on 12 new IPTs which have not been used for any other test.

Terminals suitable for rigid conductors only are checked with rigid solid and rigid stranded conductors, if existing.

NOTE "if existing" means that the conductor is available in the market where the product is intended to be sold and installed.

Terminals suitable for rigid and flexible conductors are checked with rigid solid conductors and with flexible conductors.

If the terminals are also designed to connect stripped conductors, then all tests need to be repeated on a new set of specimens with stripped conductors.

The test is made with new copper conductors having the minimum and maximum cross-sectional areas according to Table D.2.

Before the test on the reusable IPTs, a rigid solid conductor having the largest cross-sectional area is connected and disconnected once.

Conductors having the smallest cross-sectional area are connected, as in normal use, to each of three IPTs and conductors having the largest cross-sectional area are connected, as in normal use, to each of the other three IPTs.

To ensure normal cooling of terminals, the conductors connected to them shall have a length of at least 1 m.

The use of alternating current is preferable but direct current and extra low voltage are acceptable.

After this test an inspection by the naked eye, with normal or corrected vision, without additional magnification, shall show no changes obviously impairing further use, such as cracks, deformations or the like.

The whole test arrangement including the conductors is placed in a heating cabinet which is initially kept at a temperature of (20 ± 2) °C.

Except during the cooling period the test current as defined in Table 8 is applied. The test current shall be applied for the initial 30 min of each cycle.

The IPTs are then subjected to 192 temperature cycles, each cycle having a duration of approximately 1 h, as follows.

The air temperature in the cabinet is raised in approximately 20 min to 40 °C.

It is maintained within ±5 °C of this value for approximately 10 min. The IPTs are then allowed to cool down in approximately 20 min to a temperature of approximately 30 °C, forced cooling being allowed. They are kept at this temperature for approximately 10 min and, if necessary, for measuring the voltage drop, allowed to cool down further to a temperature of (20 ± 2) °C (see Figure D.3).

During the ageing test, the voltage-drop measurement is made in the ambient cool condition to ensure stability.

The voltage drop in the IPTs is measured after the completion of the 24th and 192nd cycles and recorded.

International Electrotechnical Commission
Provided by IHS under license with IEC
No reproduction or networking permitted without license from IHS

The maximum allowable voltage drop of each clamping unit, measured with the current as specified in Table D.3, shall not exceed the smaller of the two following values:

- either 22,5 mV, or
- 1,5 times the value measured after the 24th cycle.

The measuring points shall be as close as possible to the clamping unit of the IPT. If this is not possible, the measured value shall be reduced by the value of the voltage drop in the conductor between the two measuring points. An example of test-points is shown in Figure D.2.

The temperature in the heating cabinet shall be measured at a distance of at least 50 mm from the specimens.

Table D.3 – Test current for the verification of electrical and thermal stresses in normal use of insulation-piercing terminals

Rated current A	Test current A	Minimum cross-sectional area of the conductor mm^2	Test current A	Maximum cross-sectional area of the conductor mm^2
Up to and including 4	9	0,75	17,5	1,5
Above 4 and including 6	13,5	1	17,5	1,5
Above 6 and including 16	17,5	1,5	24	2,5
NOTE For switches having rated currents other than the preferred ones, the test current is determined by interpolation between the next lower and higher preferred rated currents, and the cross-sectional area of the conductor is chosen equal to the one specified for the next higher preferred rated current.				

12.4.12 A non-reusable IPT shall be so designed and constructed that it is not possible to disconnect the product without destroying it or cutting the conductors. The damage shall be obvious.

Compliance is checked by inspection.

NOTE An IPT is considered to be permanently destroyed when, for its re-installation, new parts or materials other than the original ones have to be used.

12.4.13 If an IPT uses screws for wire connection, the following test shall be performed before each test of 12.4:

Screws of IPTs are tightened and loosened 5 times by means of an appropriate tool applying the torque as stated in the corresponding column of Table 3. A new conductor end is used each time the screw is loosened and subsequently re-tightened.

Higher values of torque may be used if so stated by the manufacturer of the IPT, when the relevant information is provided.

During the test an IPT shall not be damaged so as to impair its further use, for example, the breakage of screws or damage to the head slots, threads, washers, or stirrups.

The shape of the blade of the test screwdriver shall suit the head of the screw to be tested. The screws shall be tightened in one smooth and continuous application of the torque.

12.4.14 Screws for making contact-pressure shall not serve to fix any other component, although they may hold the IPT in place or prevent it from turning.

International Electrotechnical Commission
Provided by IHS under license with IEC
No reproduction or networking permitted without license from IHS

Screws shall not be of metal which is soft or liable to creep.

NOTE The use of aluminium alloy screws in aluminium alloy bodied IPTs requires additional tests, according to IEC 61545.

Compliance is checked by inspection.

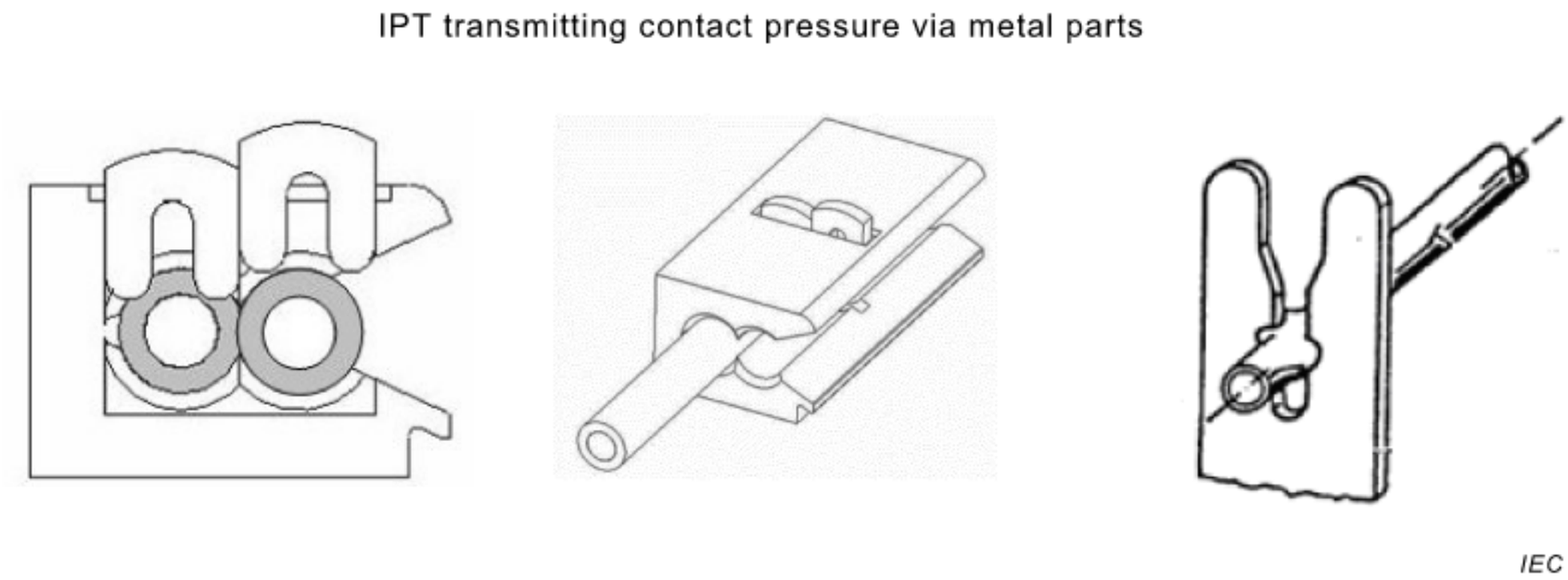

Figure D.1 – Example of insulation-piercing terminals

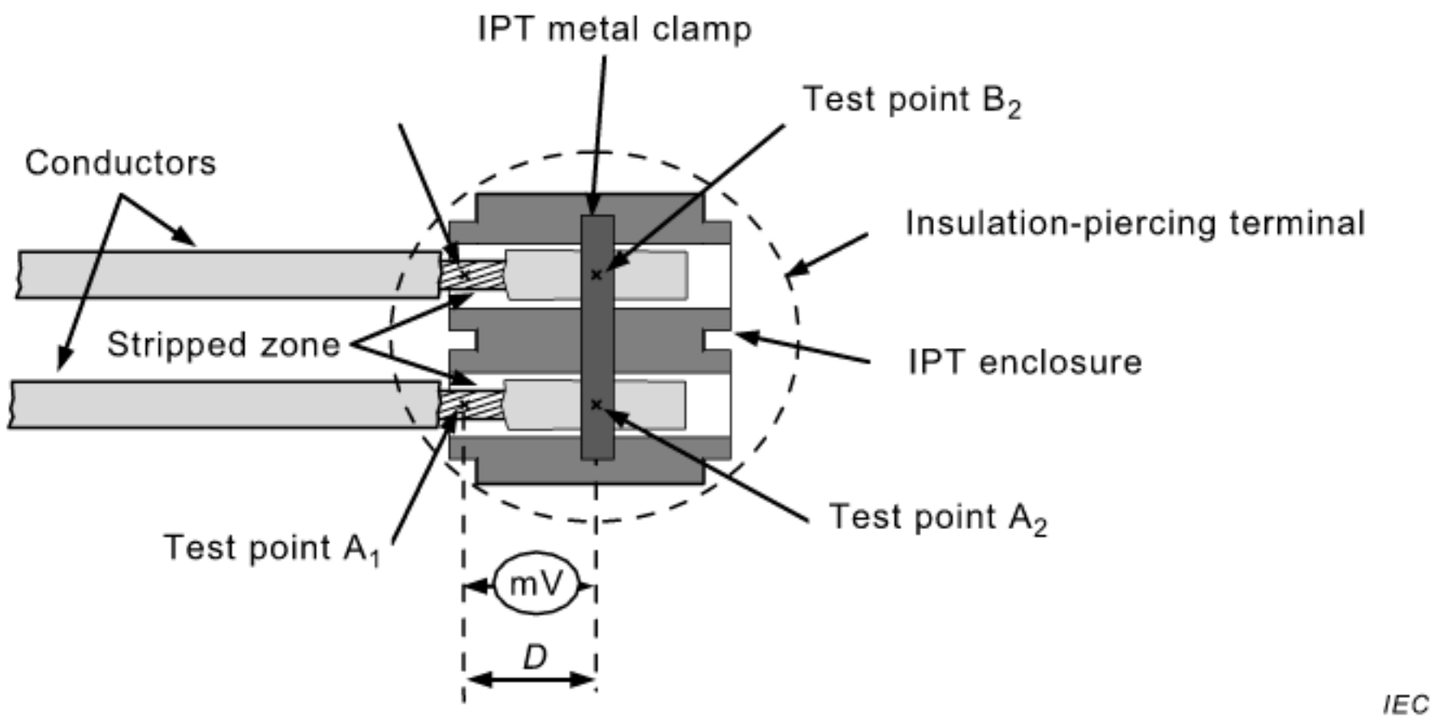

Distance *D* between two test points shall be as short as possible to avoid including the voltage drop of the conductor when measuring the IPT's voltage drop.

Figure D.2 – Example of test-points

International Electrotechnical Commission
Provided by IHS under license with IEC
No reproduction or networking permitted without license from IHS

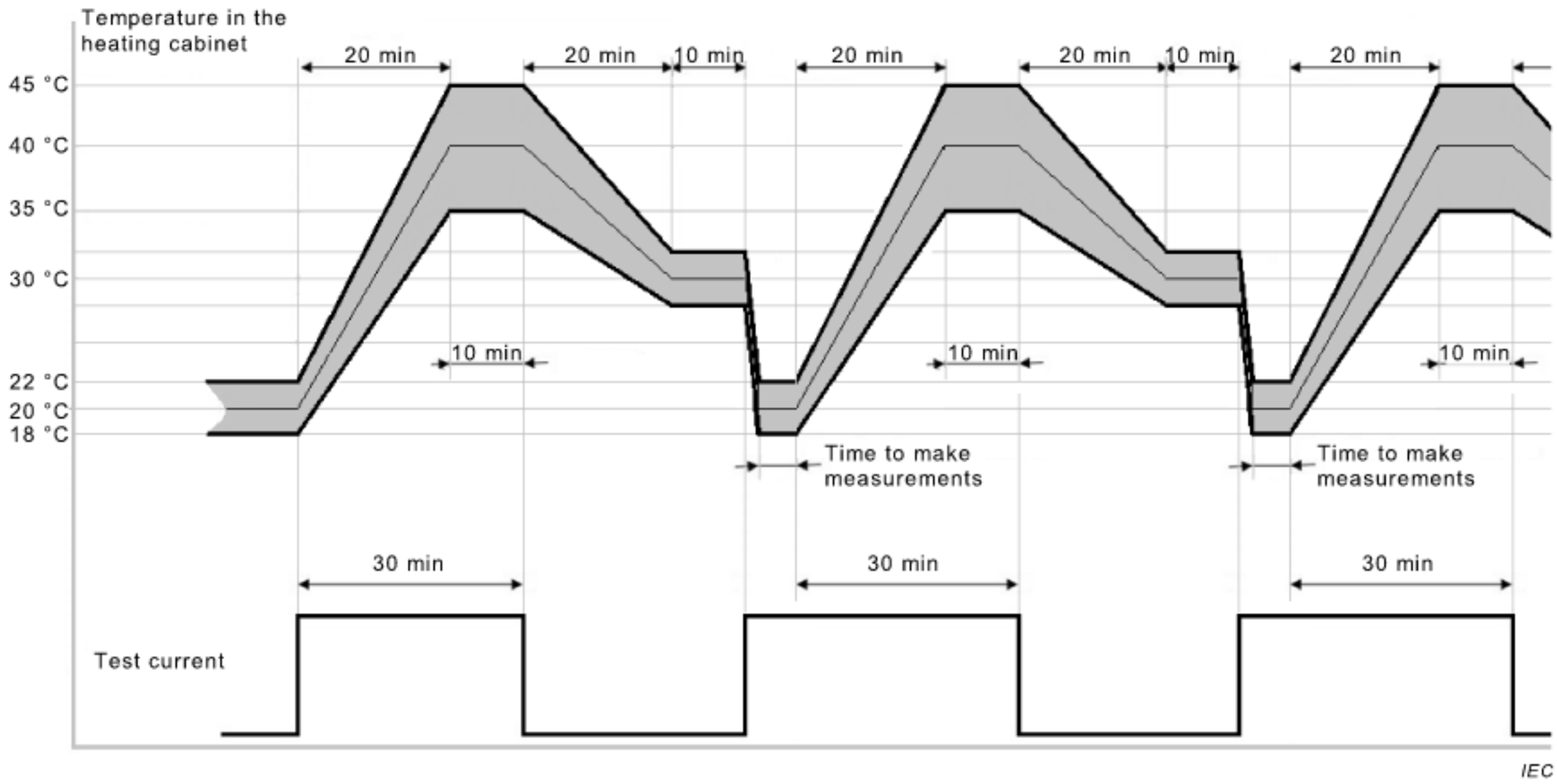

Figure D.3 – Temperature cycle for the voltage drop test of 12.4.11

International Electrotechnical Commission
Provided by IHS under license with IEC
No reproduction or networking permitted without license from IHS

Annex E
(informative)

Additional requirements and tests for switches intended to be used at a temperature lower than −5 °C

The purpose of Annex E is to bring additional explanations and requirements to the normative text of this document. Therefore the numbering of clauses, subclauses, figures and tables follows that of the main body of the text. Only the relevant clauses, subclauses, tables and figures are cited.

1 Scope

Replace NOTE 4 by:

For switches intended to be used in temperatures below normal range, additional requirements and tests are given in informative Annex E.

NOTE 4 In the following countries, Annex E is normative: FI, NO, SE.

5 General remarks on tests

Add at the end of Clause 5:

All tests in Annex E are related to a temperature of -25 °C. If a lower value is declared by the manufacturer, the declared value shall be a multiple of 5 °C. All tests in Annex E shall be carried out at the declared temperature.

8 Marking

8.1 General

Add the following new list item after m):

n) Symbol for products declared as suitable for use at a temperature below the normal range.

8.2 Symbols

Add the following marking:

– Intended for use in cold environment down to −25 °C, symbol IEC 60417-6292:2015-11

If a lower value of temperature is declared by the manufacturer, the declared value shall be a multiple of 5 °C; the symbol shall indicate this value.

13.15.2

The test of 13.15.2 shall be performed at a temperature of *(−25 ± 2)* °C.

19 Normal operation

Add the following new subclause at the end of Clause 19:

International Electrotechnical Commission
Provided by IHS under license with IEC
No reproduction or networking permitted without license from IHS

19.4 Test for switches intended to be used in ambient temperature below −5 °C

The following additional test shall be carried out on switches intended to be used below the normal temperature ranges if marking for low temperature is used:

– *Wire the actual switch with a signal circuit including an indicator to easily evaluate that the switch is working as intended during the test.*

– *The switches are then kept for 16 h in a freezer at a temperature of (−25 ± 2) °C.*

– *For each of the last 4 h, the switches shall be mechanically operated by hand for 20 operations. The rate of operation shall be approximately 30 operations per minute, i.e. each test sequence shall be 40 s in duration. For these operations, the switch shall be taken out of the freezer, and immediately afterwards (within 3 min) while the switches are still cold, the specimens are subjected to the operations. Immediately after the operations, the switch shall be put again into the freezer.*

– *During and after this test the switch shall operate properly and show no visible harmful deformation, cracks or similar damage which would lead to non-compliance with this document.*

– *Verification of operation is checked by the test described in 19.4, immediately followed by the measurement of the insulation resistance and by the electric strength test specified in Clause 16.*

20 Mechanical strength

Add the following new subclause at the end of Clause 20:

20.11 Impact test at low temperatures

The following additional test shall be carried out on switches intended to be used below the normal temperature ranges if marking for low temperature is used:

– *The switch is mounted as given in 20.1 and kept for 16 h in a freezer at a temperature of (−25 ± 2) °C.*

– *Then the switch assemblies shall be taken out of the freezer and immediately afterwards (within 3 min) while the switches are still cold, the specimens are subjected to the impact test and compliance according to 20.2.*

International Electrotechnical Commission
Provided by IHS under license with IEC
No reproduction or networking permitted without license from IHS

Bibliography

IEC 60050-151, *International Electrotechnical Vocabulary – Part 151: Electrical and magnetic devices* (available at http://www.electropedia.org)

IEC 60050-442, *International Electrotechnical Vocabulary – Part 442: Electrical accessories* (available at http://www.electropedia.org)

IEC TR 60083, *Plugs and socket-outlets for domestic and similar general use standardized in member countries of IEC*

IEC 60227-1, *Polyvinyl chloride insulated cables of rated voltages up to and including 450/750 V – Part 1: General requirements*

IEC 60227-3, *Polyvinyl chloride insulated cables of rated voltages up to and including 450/750 V – Part 3: Non-sheathed cables for fixed wiring*

IEC 60227-4, *Polyvinyl chloride insulated cables of rated voltages up to and including 450/750 V – Part 4: Sheathed cables for fixed wiring*

IEC 60245-1, *Rubber insulated cables – Rated voltages up to and including 450/750 V – Part 1: General requirements*

IEC 60364-4-41, *Low-voltage electrical installations – Part 4-41: Protection for safety – Protection against electric shock*

IEC 60364-5-53, *Electrical installations of buildings – Part 5-53: Selection and erection of electrical equipment – Isolation, switching and control*

IEC 60669-2-2, *Switches for household and similar fixed electrical installations – Part 2-2: Particular requirements – Electromagnetic remote-control switches (RCS)*

IEC 60669-2-3, *Switches for household and similar fixed electrical installations – Part 2-3: Particular requirements – Time-delay switches (TDS)*

IEC 60669-2-4, *Switches for household and similar fixed electrical installations – Part 2-4: Particular requirements – Isolating switches*

IEC 60669-2-5, *Switches for household and similar fixed electrical installations – Part 2-5: Particular requirements – Switches and related accessories for use in home and building electronic systems (HBES)*

IEC 60669-2-6, *Switches for household and similar fixed electrical installations – Part 2-6: Particular requirements – Fireman's switches for exterior and interior signs and luminaires*

IEC 60670-1, *Boxes and enclosures for electrical accessories for household and similar fixed electrical installations – Part 1: General requirements*

IEC 60969, *Self-ballasted lamps for general lighting services – Performance requirements*

IEC 60998 (all parts), *Connecting devices for low-voltage circuits for household and similar purposes*

IEC 60998-2-1, *Connecting devices for low-voltage circuits for household and similar purposes – Part 2-1: Particular requirements for connecting devices as separate entities with screw-type clamping units*

International Electrotechnical Commission
Provided by IHS under license with IEC
No reproduction or networking permitted without license from IHS

IEC 60998-2-2, *Connecting devices for low voltage circuits for household and similar purposes – Part 2-2: Particular requirements for connecting devices as separate entities with screwless-type clamping units*

IEC 60998-2-3, *Connecting devices for low-voltage circuits for household and similar purposes – Part 2-3: Particular requirements for connecting devices as separate entities with insulation-piercing clamping units.*

IEC 60999 (all parts), *Connecting devices – Electrical copper conductors – Safety requirements for screw type and screwless-type clamping units*

IEC 60999-1:1999, *Connecting devices – Electrical copper conductors – Safety requirements for screw type and screwless-type clamping units – Part 1: General requirements and particular requirements for clamping units for conductors from 0,2 mm^2 up to 35 mm^2 (included)*

IEC 61084 (all parts), *Cable trunking and ducting systems for electrical installations*

IEC 61347-1, *Lamp controlgear – Part 1: General and safety requirements*

IEC 61545, *Connecting devices – Devices for the connection of aluminium conductors in clamping units of any material and copper conductors in aluminium bodied clamping units*

ISO 2039-2, *Plastics – Determination of hardness – Part 2: Rockwell hardness*

ISO/IEC Guide 51:2014, *Aspects liés à la sécurité – Principes directeurs pour les inclure dans les normes*

AS/NZ 3133:2013, *Approval and test specification – Air-break switches*
AS/NZ 3133:2013/AMD1:2014
AS/NZ 3133:2013/AMD2:2016

International Electrotechnical Commission
Provided by IHS under license with IEC
No reproduction or networking permitted without license from IHS