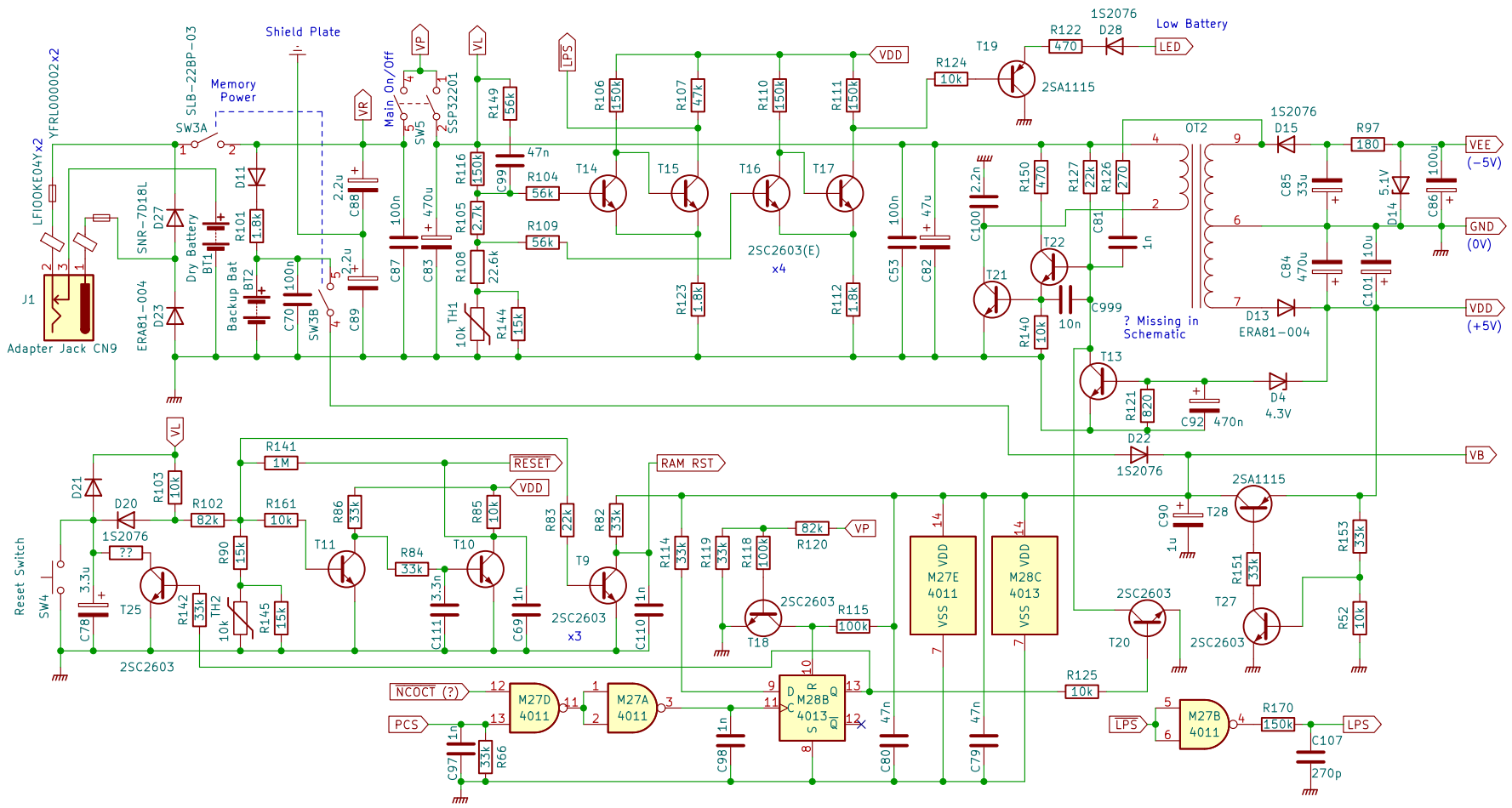

Transcript of original TRS-80 Model 100 Schematic.
Work in progress.
Power supply. Reset circuit.

Transcribed by Henner Zeller

Sheet: /
File: trs80-100.kicad_sch

Title: TRS-80 Model 100 Schematic

Size: A4	Date: 1983	Rev:
KiCad E.D.A. kicad 6.0.5		Id: 1/1