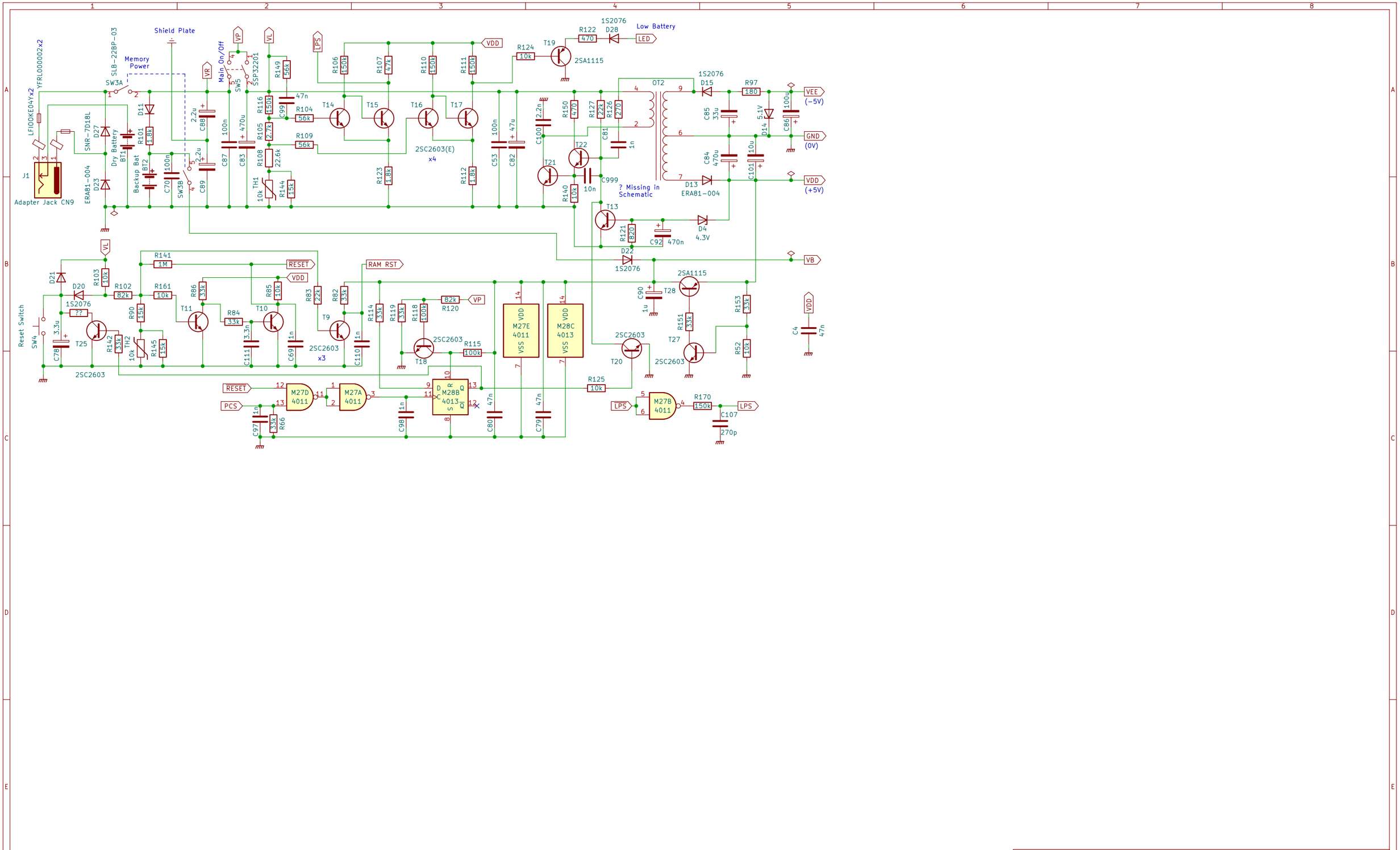

Transcript of original TRS-80 Model 100 Schematic

https://github.com/hzeller/trs80-100-schematic (Henner Zeller)

Kyocera / Tandy

Sheet: /

File: trs80-100.kicad_sch

Title: TRS-80 Model 100 Schematic

Size: A3	Date: 1983	**Rev:**
KiCad E.D.A. kicad 6.0.5		Id: 1/1