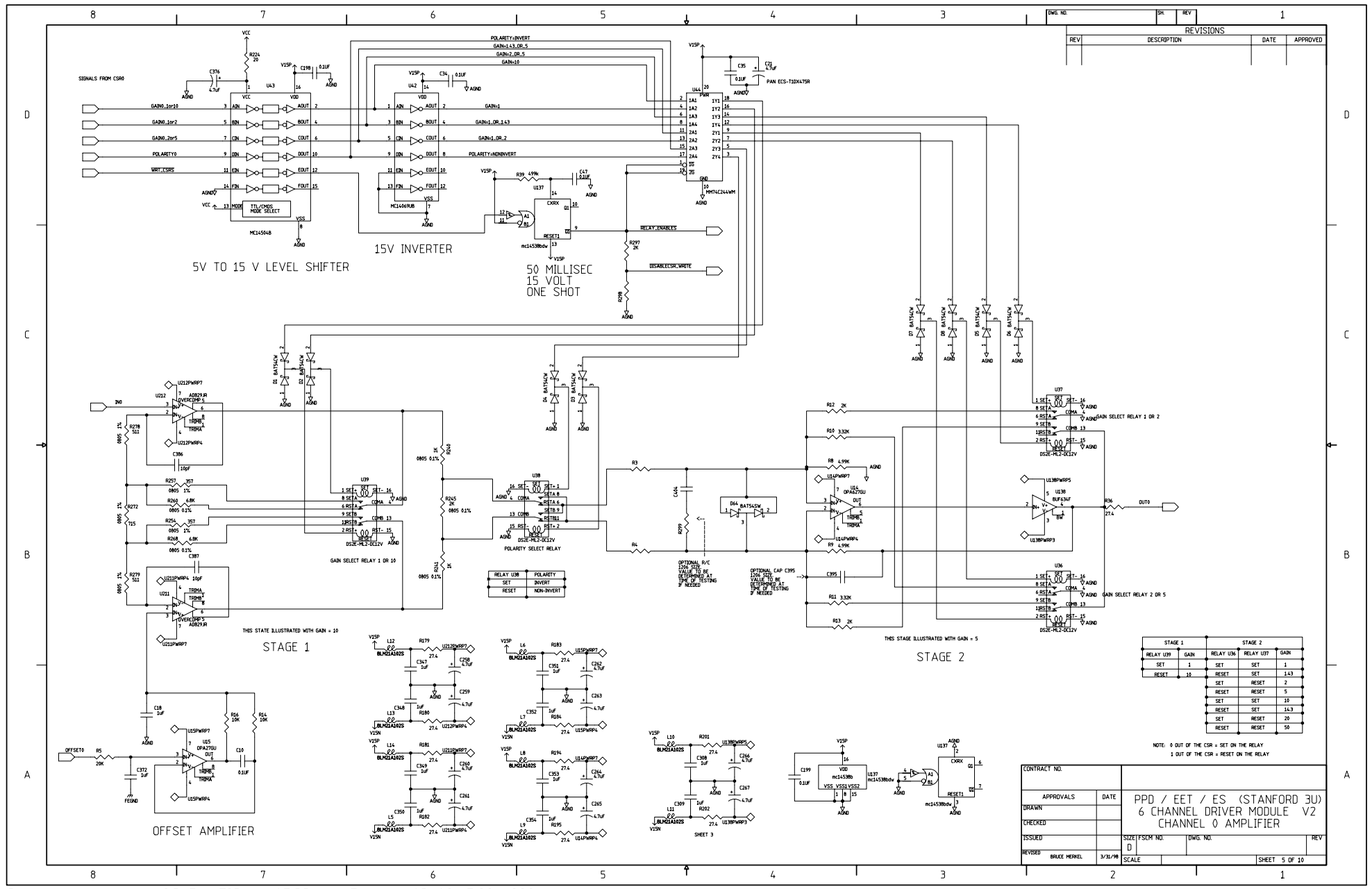

C:\jobs\driver\vbdc\SCHEMATIC.sbk(05;33) Fri Apr 03 09:45:28 1998