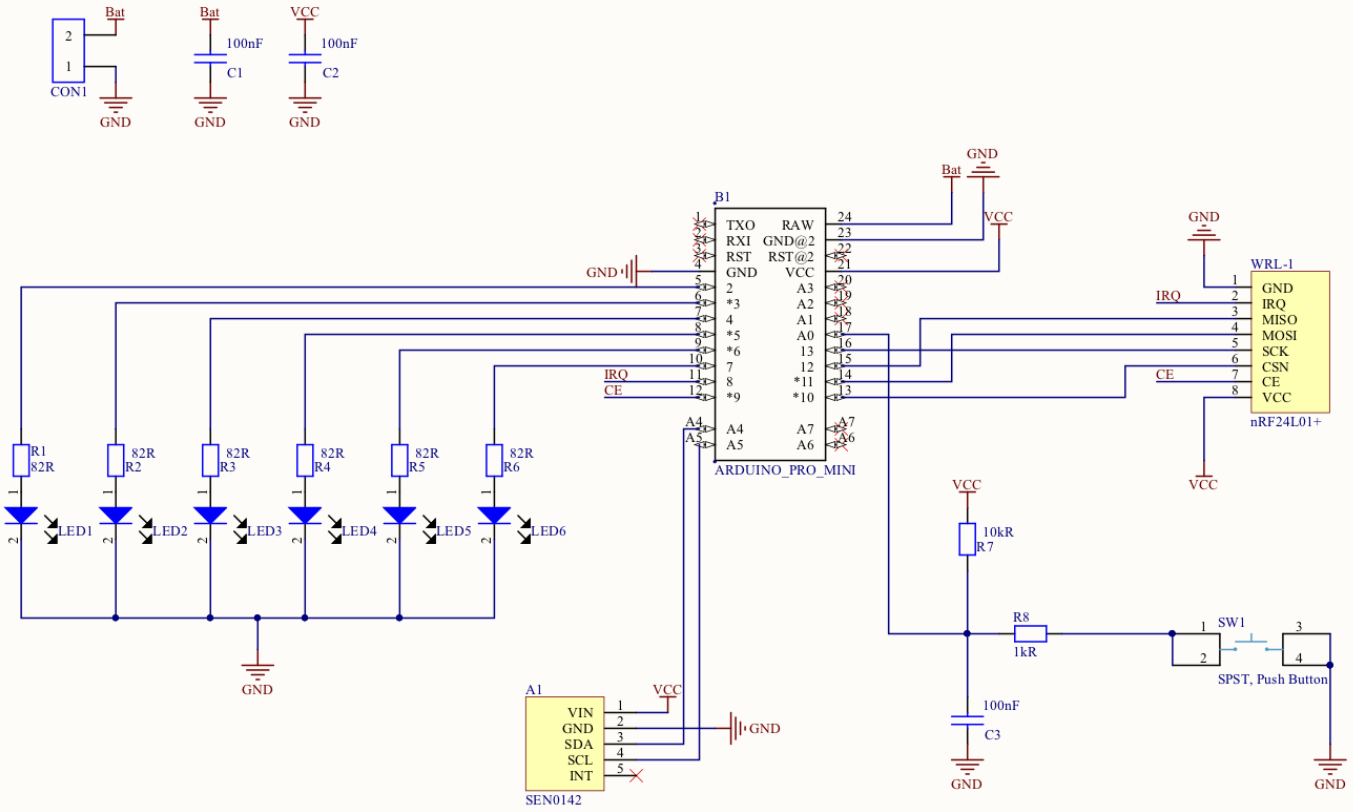

Title	FDR Schematic		
Size A4	Number		Revision
Date:	26/08/2019	Sheet	of
File:	C:\Users\..\FDR2019.SchDoc	Drawn By:	Instrumentation Workshop