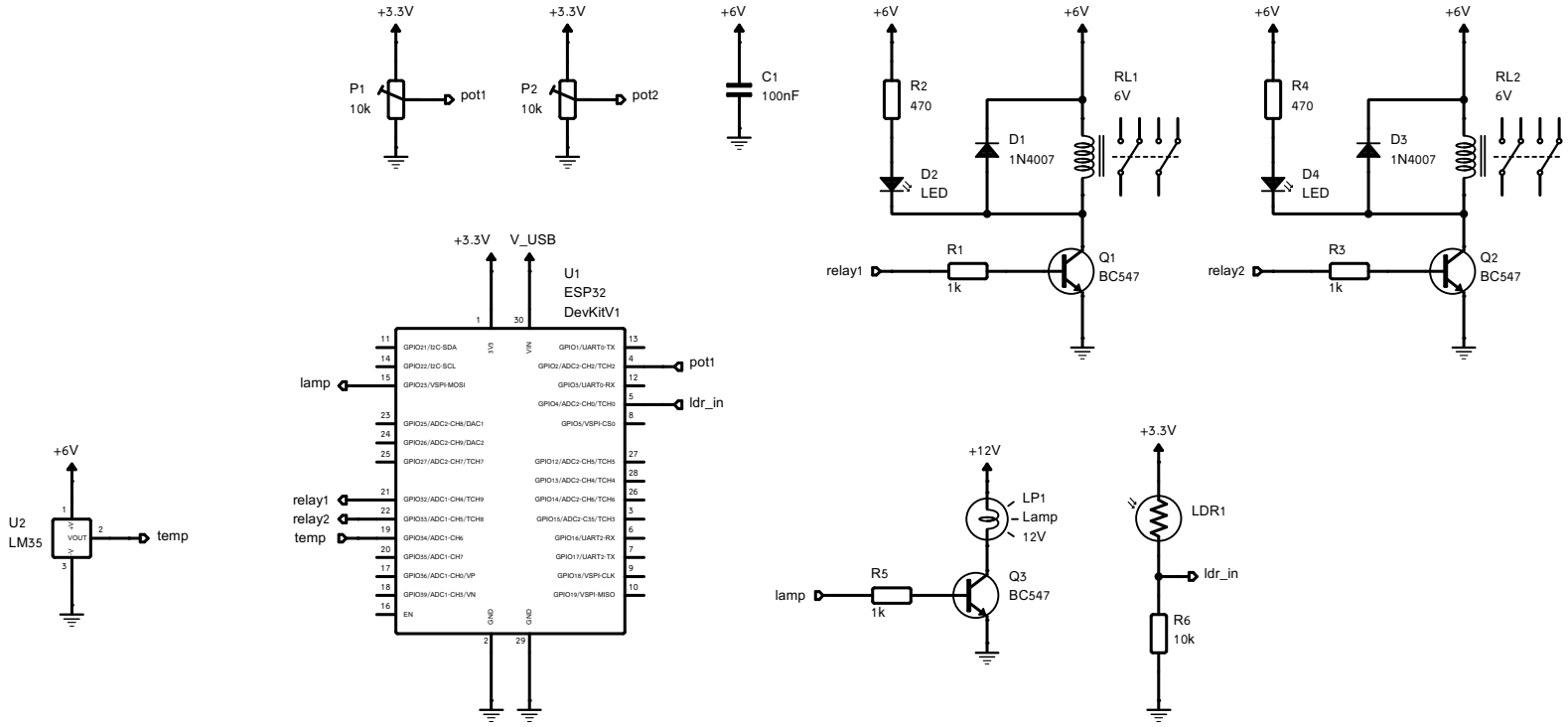

TITLE

ESP32 PWM

DESIGNED BY	REVIEWED BY
Eng. Wagner Rambo	Eng. Wagner Rambo
26/02/2021	06/03/2021

WRKits

ELECTRONICS ENGINEERING

wrkits.com.br

APPROVED

SHEET	1/1
REV	01
DOC	01