- SITE SOIL CLASSIFICATION
  CLASS 'P' TO AS 2870–2011

- DWELLING & GARAGE: WAFFLE POD CONCRETE SLAB.
- SITE CUT & FILL TO **RL 99.10**
- FALL OVER BUILDING PLATFORM **2400mm**
- FREEBOARD **310mm (MOD. CLASS M)**
- REBATE TO HOUSE **135mm**
- STEP DOWN TO PORCH **220mm**
- STEP DOWN TO ALFRESCO **135mm**
- STEP DOWN TO GARAGE **135mm**

DENOTES AREA OF ADDITIONAL SITE SCRAPE DUE TO WAFFLE POD STEP DOWN

- PROPERTY SUBJECT TO WIND RATING OF **(28M/S N1)**
- POSITION OF THE FRONT GARDEN TAP & WATER METER IS BY WATER AUTHORITY, THE FULL COST OF RELOCATION IS AT THE OWNER'S EXPENSE.

BAL–12.5

PROVIDE BUSHFIRE RATED CONSTRUCTION TO COMPLY WITH CLAUSES 5.4, 5.5 ,5.6, AND 5.8 OF THE AUSTRALIAN STANDARD AS 3959–2018 AND SHALL INCORPORATE, BUT IS NOT LIMITED TO, THE FOLLOWING ITEMS.

PROVIDE BUSHFIRE RATED CONSTRUCTION TO COMPLY WITH CLAUSES 5.4, 5.5, 5.6, AND 5.8 OF THE AUSTRALIAN STANDARD AS 3959–2018 AND SHALL INCORPORATE, BUT IS NOT LIMITED TO, THE FOLLOWING ITEMS.

EXTERNAL WALLS
* VENTS AND WEEPHOLES TO BE SCREENED WITH ALUMINIUM MESH WITH MAXIMUM APERTURE SIZE OF 2MM.
CLADDING MAY BE:– FIBRE CEMENT SHEET CLADDING NOT LESS THAN 4.5MM THICK (6MM THICK UP TO 400MM FROM GROUND & LOWER LEVEL ROOF) **OR** BUSHFIRE RESTING TIMBER **OR** ANY COMBINATION OF THESE.
* FINISH ALL JOINTS IN THE EXTERNAL SURFACE MATERIAL OF WALLS TO PREVENT GAPS GREATER THAN 3 MM.

SCREENS
* SCREENS SHALL BE ALUMINIUM FRAMED WITH ALUMINIUM MESH WITH MAXIMUM APERTURE SIZE OF 2MM AND SHALL FIT WINDOW AND DOOR OPENINGS TO PREVENT GAPS GREATER THAN 3MM.
* THE OPENABLE PORTIONS OF WINDOWS SHALL BE SCREENED.

WINDOWS
* FRAMES AND GLAZING, IF LESS THAN 400MM FROM AN EXTERNAL 'HORIZONTAL SURFACE' SHALL HAVE FRAMES MADE FROM METAL **OR** FIRE RESISTANT TIMBER & SHALL HAVE GRADE A SAFETY GLASS MINIMUM 4MM THICK & COMPLY WITH CL 5.5.3.

DOORS
* PROVIDE WEATHER STRIPS **OR** DRAUGHT EXCLUDERS/SEALS AT BASE OF ALL EXTERNAL HINGED DOORS.
* FRONT ENTRY AND GARAGE REAR ACCESS DOORS (IF APPLICABLE) TO HAVE FRAMES MADE FROM METAL **OR** FIRE RESISTANT TIMBER.
* GLAZED DOORS, IF LESS THAN 400MM FROM AN EXTERNAL 'HORIZONTAL SURFACE' SHALL HAVE FRAMES MADE FROM METAL **OR** FIRE RESISTANT TIMBER & SHALL HAVE 'GRADE A' SAFETY GLASS MINIMUM 4MM THICK & COMPLY WITH CLAUSE 5.5.3.
* GARAGE DOORS TO BE FITTED WITH WEATHER STRIPS, DRAUGHT EXCLUDERS/SEALS (EMB–A–SEAL), WITH GAPS NOT GREATER THAN 3MM.
*SLIDING DOORS SHALL HAVE FRAMES MADE FROM METAL **OR** FIRE RESISTANT TIMBER AND SHALL HAVE GRADE A SAFETY GLASS COMPLYING WITH AS 1288.

ROOFS
* TILED ROOFS TO BE FULLY SARKED DIRECTLY BELOW ROOF BATTENS AND EXTENDING INTO GUTTERS AND VALLEYS. PREVENT GAPS WHERE SARKING MEETS FASCIAS, GUTTERS, VALLEYS AND THE LIKE.
* SHEET ROOFING MAY HAVE FOIL–BACKED INSULATION INSTALLED OVER BATTENS.
* GAPS GREATER THAN 3MM TO BE SCREENED WITH ALUMINIUM MESH WITH MAXIMUM APERTURE SIZE OF 2MM.
* BUTTERFLY CLOSERS AT/NEAR CEILING LEVEL TO EVAPORATIVE COOLING SYSTEM OR NON COMBUSTIBLE COVER WITH MESH MADE OF SS, BRONZE OR ALUMINIUM, MAXIMUM APERTURE SIZE OF 2MM.
* ALL TILED AND SHEET ROOFS AND EAVE PENETRATIONS (INCLUDING ROOF VENTILATORS, ROOF MOUNTED EVAPORATIVE COOLING UNITS) SHALL INCORPORATE METAL SCREENS AND BE SEALED WITH NON–COMBUSTIBLE MATERIAL TO PREVENT GAPS GREATER THAN 3MM.
* PROVIDE ROOF VENTILATION, WITH SPARK–GUARD MESH TO COMPLY WITH NCC REQUIREMENTS, TO FULLY SARKED ROOFS.

UTILITY SERVICES
* ALL ABOVE GROUND EXPOSED PIPES (WATER & GAS) TO BE METAL.

DATE	AMENDMENT	BY
09.07.21	CONTRACT DRAWING & FORM 5 (06.07.21)	D.H.P
14.07.21	6STARS ENERGY OPTION	HML
22.07.21	ADDED SOIL/SURVEY (NO PSI)	P.T
14.08.21	ADDED RFI	T.T.N

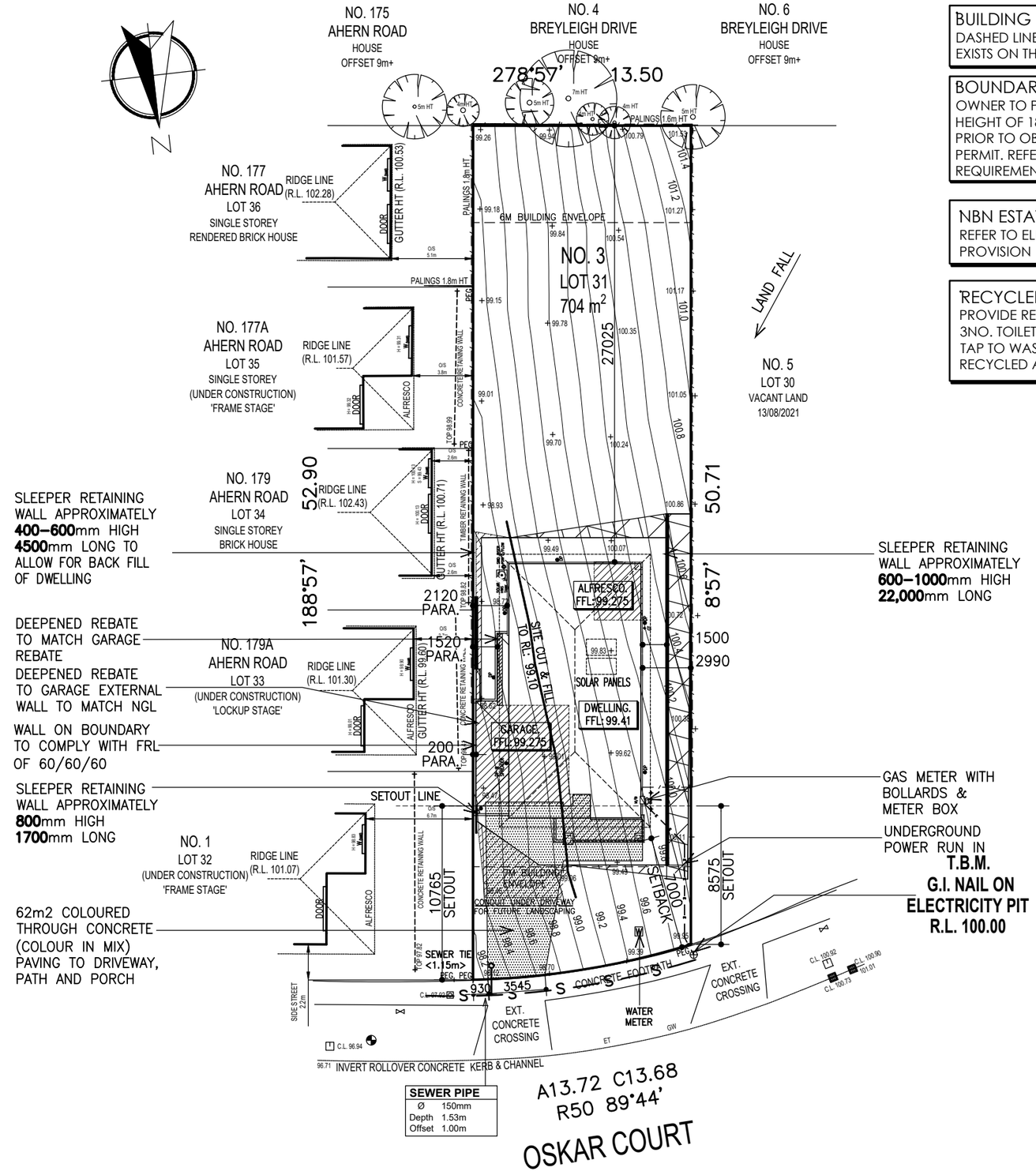

SEWER PIPE	
Ø	150mm
Depth	1.53m
Offset	1.00m

BUILDING ENVELOPE BUILDING ENVELOPE
DASHED LINES DENOTES A BUILDING ENVELOPE EXISTS ON THIS PROPERTY

BOUNDARY FENCE(S) REQUIRED
OWNER TO PROVIDE PERIMETER FENCING TO A MINIMUM HEIGHT OF 1800mm TO SIDES AND REAR BOUNDARIES PRIOR TO OBTAINING A CERTIFICATE OF OCCUPANCY PERMIT. REFER TO MCP AND CONVENT FOR FENCING REQUIREMENT THAT WILL OVERRIDE BUILDING REGULATION

NBN ESTATE
REFER TO ELECTRICAL PLAN FOR DETAIL ON NBN PROVISION

RECYCLED WATER
PROVIDE RECYCLED WATER PLUMBING CONNECTED TO 3NO. TOILET CISTERNS, 2 NO. GARDEN TAPS AND 1No. TAP TO WASHING MACHINE SIGNED AS HOT COLD AND RECYCLED AS PER DEVELOPERS REQUIREMENTS.

LEGEND
- S/W PROPERTY INLET
- S/W PIT
- SEWER MANHOLE
- ELECTRICITY PIT
- ELECTRICITY POLE
- ELEC. POLE & LIGHT
- STREET LIGHT
- WATER VALVE
- WATER HYDRANT
- SEWER VENT / I.S
- TELSTRA PIT
- TREE
- STREET SIGN
- T.B.M.
- GAS METER
- WATER METER
- W(HAB) HABITABLE ROOM
- SHRUBS / FOLIAGE

WINDOW
H = HEAD
S = SILL

SITE COVERAGE ANALYSIS		
BUILDING AREA:	152.46	sq.m
PAVING AREA:	62	sq.m
SITE AREA:	704.00	sq.m
SITE COVERAGE:	21.66	%
TOTAL DWELLING & PAVING AREA	214.46	
GARDEN AREA AVAIALABLE:	489.54	
GARDEN AREA: FOR LOTS 651sqm & ABOVE	246.40	sq.m

Xpress Built by SIMONDS
SIMONDS HOMES VICTORIA P/L ACN 050 197 610
HEAD OFFICE 1ST FLOOR 570 ST KILDA ROAD, MELBOURNE VIC 3004
TELEPHONE (03) 9682 0700
E-MAIL enquiries@simonds.com.au
ENQUIRIES 1300 SIMONDS
INTERNET www.simonds.com.au

Spec: XPRESS

FINAL DRAWINGS

COMPLETED BY: Amy Ibrahim

© COPYRIGHT 2003 SIMONDS IP Pty Ltd (ACN 144 839 805) (ABN 56 144 839 805) NOT TO BE REPRODUCED IN PART OR WHOLE WITHOUT EXPRESS PERMISSION.

View: SITE PLAN

Customer:

Address: LOT 31, 3 OSKAR COURT, PAKENHAM

Version 1.0

Sheet No: 1.1

Scale: 1:300@A3

Date: 18-Nov-21

House: CAYENNE 29_270–12.5A

Facade: MULBERRY

Drawn: D.H.P

Job No: 69975 ACC

Design: X00X

Mastered: T.N

Checked: X00X

LANDSCAPED AREA LEGEND:
BY CLIENT–AFTER HANDOVER
(UNLESS OTHERWISE SPECIFIED IN CONTRACT)

DENOTES GRASS

DENOTES GARDEN BED WITH SELECTED PLANTS

SELECTED PLANTS

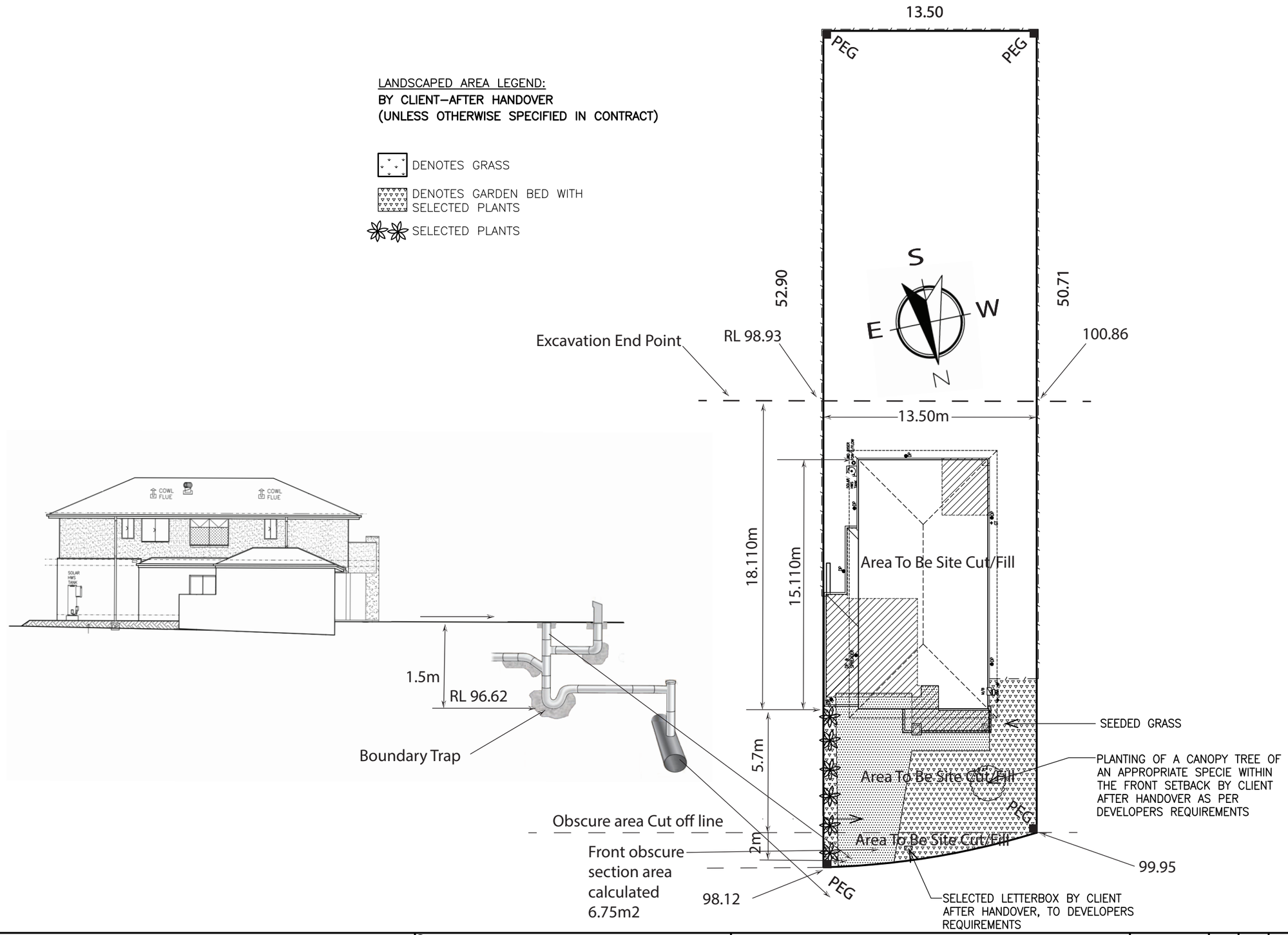

Xpress Built by SIMONDS

SIMONDS HOMES VICTORIA P/L ACN 050 197 610
HEAD OFFICE 1ST FLOOR 570 ST KILDA ROAD, MELBOURNE VIC 3004
TELEPHONE (03) 9682 0700
E-MAIL enquiries@simonds.com.au
ENQUIRIES 1300 SIMONDS
INTERNET www.simonds.com.au

Spec: XPRESS

FINAL DRAWINGS

COMPLETED BY: Amy Ibrahim

© COPYRIGHT 2003 SIMONDS IP Pty Ltd (ACN 144 839 805) (ABN 56 144 839 805) NOT TO BE REPRODUCED IN PART OR WHOLE WITHOUT EXPRESS PERMISSION.

View: SITE PLAN

Boundary Peg Layout

Address: LOT 31, 3 OSKAR COURT, PAKENHAM

Version 1.0

Sheet No: 1.1

Scale: 1:250@A3

Date: 18-Nov-21

House: CAYENNE 29_270–12.5A

Facade: MULBERRY

Drawn: D.H.P

Job No: 69975 ACC

Design: X00X

Mastered: T.N

Checked: X00X

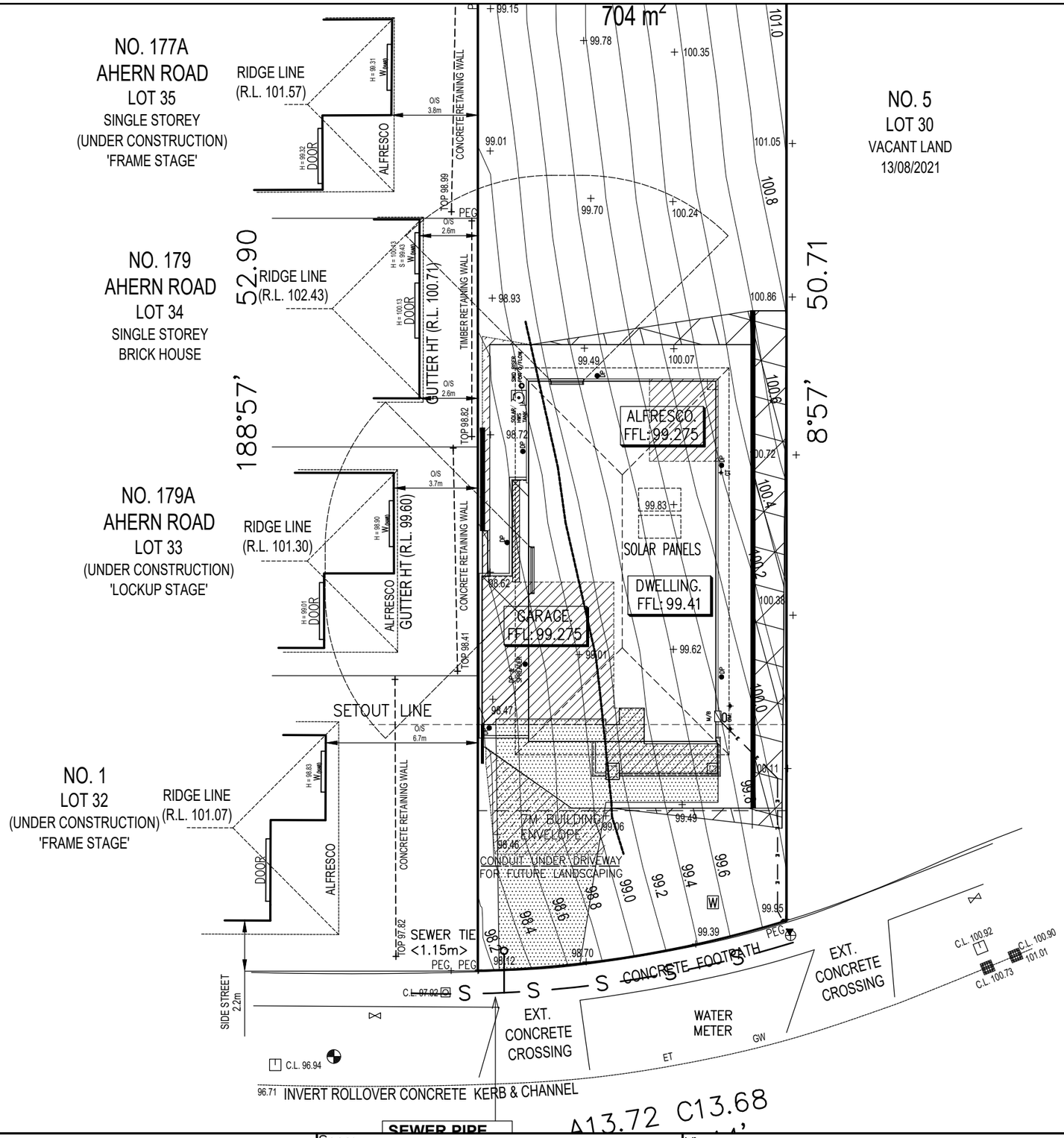

Xpress
Built by SIMONDS

SIMONDS HOMES VICTORIA P/L ACN 050 197 610
HEAD OFFICE 1ST FLOOR 570 ST KILDA ROAD, MELBOURNE VIC 3004
TELEPHONE (03) 9682 0700
E-MAIL enquiries@simonds.com.au
ENQUIRIES 1300 SIMONDS
INTERNET www.simonds.com.au

Spec: XPRESS

FINAL DRAWINGS

COMPLETED BY: Amy Ibrahim

© COPYRIGHT 2003 SIMONDS IP Pty Ltd (ACN 144 839 805) (ABN 56 144 839 805)
NOT TO BE REPRODUCED IN PART OR WHOLE WITHOUT EXPRESS PERMISSION.

View: OVERLOOKING DIAGRAM

Customer:

Address: LOT 31, 3 OSKAR COURT, PAKENHAM

Version 1.0

Sheet No: 1.3

Scale: 1:200@A3

Date: 18-Nov-21

House: CAYENNE 29_270-12.5A

Facade: MULBERRY

Drawn: D.H.P

Job No: 69975 ACC

Design: X00X

Mastered: T.N

Checked: X00X

OVERSHADOWING & FENCING DIAGRAMS

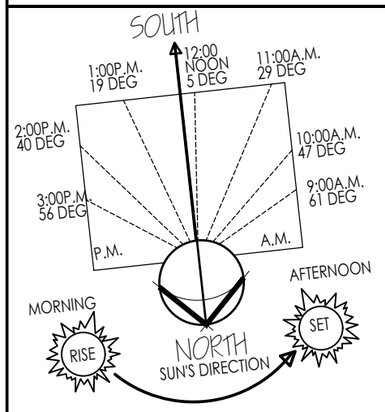

NOTE: PICTORIAL REPRESENTATION ONLY
NOT TO BE USED AS TRUE NORTH POINT FOR THIS JOB

SHADOW LOCATION TIME OF DAY

9:00 AM - SEPTEMBER 22

SEPTEMBER 22 (EQUINOX)

TIME	SHADOW LENGTH PER METRE HIGH	ALTITUDE SUN DEGREES	AZIMUTH
8:00 AM	2.60 METERS	21° DEG	73° DEG
9:00 AM	1.60 METERS	32° DEG	61° DEG
10:00 AM	1.15 METERS	41° DEG	47° DEG
11:00 AM	0.87 METERS	49° DEG	28° DEG
12:00 NOON	0.81 METERS	52° DEG	5° DEG
1:00 PM	0.84 METERS	50° DEG	341° DEG
2:00 PM	1.00 METERS	45° DEG	320° DEG
3:00 PM	1.37 METERS	36° DEG	304° DEG
4:00 PM	2.14 METERS	25° DEG	292° DEG

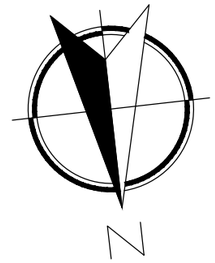

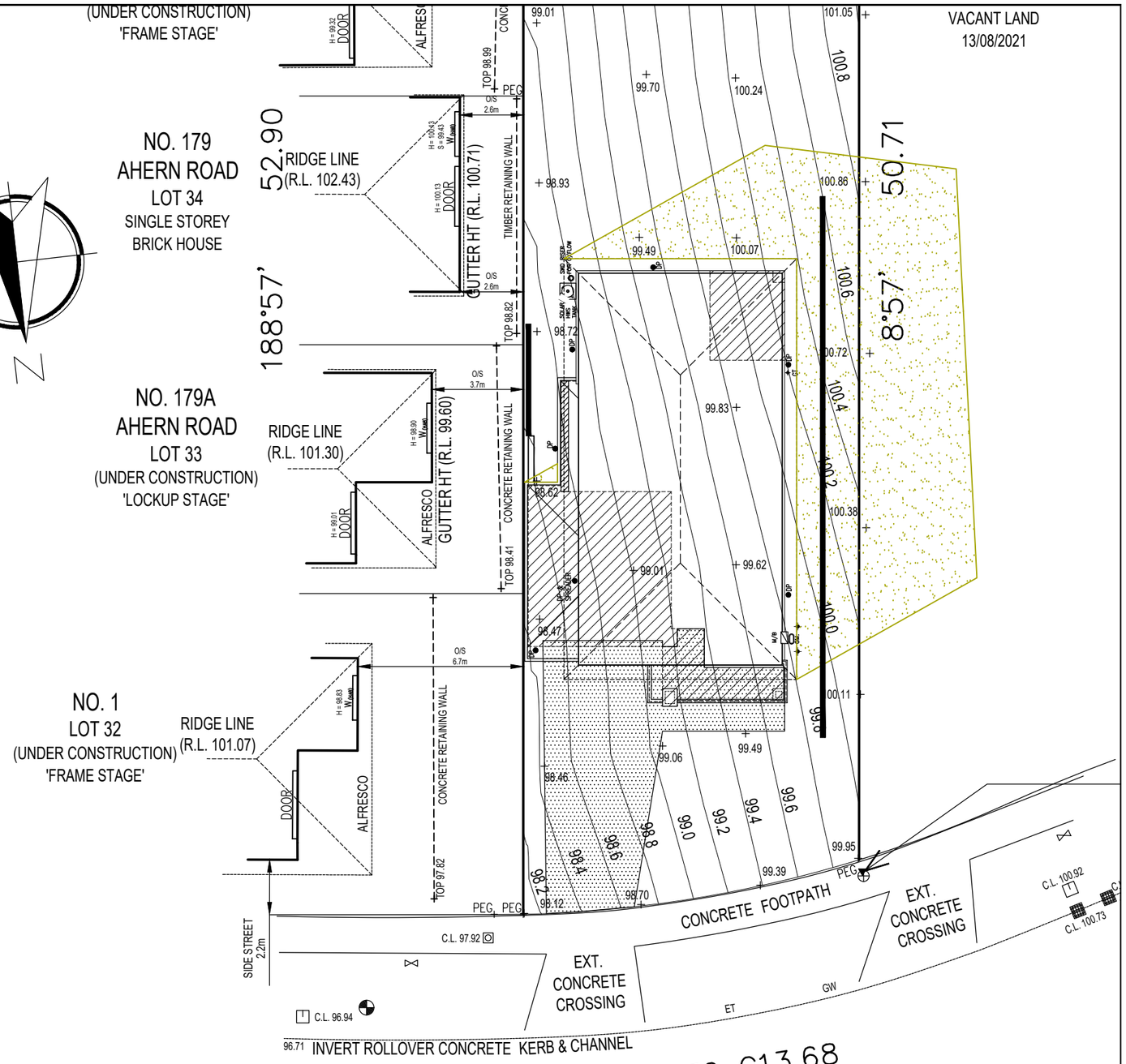

Xpress Built by SIMONDS

SIMONDS HOMES VICTORIA P/L ACN 050 197 610
HEAD OFFICE 1ST FLOOR 570 ST KILDA ROAD, MELBOURNE VIC 3004
TELEPHONE (03) 9682 0700
E-MAIL enquiries@simonds.com.au
ENQUIRIES 1300 SIMONDS
INTERNET www.simonds.com.au

Spec: XPRESS

FINAL DRAWINGS

COMPLETED BY: Amy Ibrahim

© COPYRIGHT 2003 SIMONDS IP Pty Ltd (ACN 144 839 805) (ABN 56 144 839 805) NOT TO BE REPRODUCED IN PART OR WHOLE WITHOUT EXPRESS PERMISSION.

View: SHADOW DIAGRAM @ 9:00 (22nd SEP. & MAR)

Customer:

Address: LOT 31, 3 OSKAR COURT, PAKENHAM

Version 1.0

Sheet No: 1.4

Scale: 1:200@A3

Date: 18-Nov-21

House: CAYENNE 29_270-12.5A

Facade: MULBERRY

Drawn: D.H.P

Job No: 69975 ACC

Design: X00X

Mastered: T.N

Checked: X00X

OVERSHADOWING & FENCING DIAGRAMS

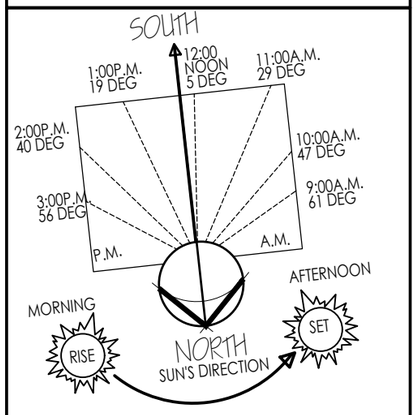

NOTE: PICTORIAL REPRESENTATION ONLY
NOT TO BE USED AS TRUE NORTH POINT FOR THIS JOB

SHADOW LOCATION TIME OF DAY

12:00 NOON - SEPTEMBER 22

SEPTEMBER 22 (EQUINOX)

TIME	SHADOW LENGTH PER METRE HIGH	ALTITUDE SUN DEGREES	AZIMUTH
8:00 AM	2.60 METERS	21° DEG	73° DEG
9:00 AM	1.60 METERS	32° DEG	61° DEG
10:00 AM	1.15 METERS	41° DEG	47° DEG
11:00 AM	0.87 METERS	49° DEG	28° DEG
12:00 NOON	0.81 METERS	52° DEG	5° DEG
1:00 PM	0.84 METERS	50° DEG	341° DEG
2:00 PM	1.00 METERS	45° DEG	320° DEG
3:00 PM	1.37 METERS	36° DEG	304° DEG
4:00 PM	2.14 METERS	25° DEG	292° DEG

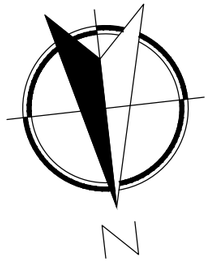

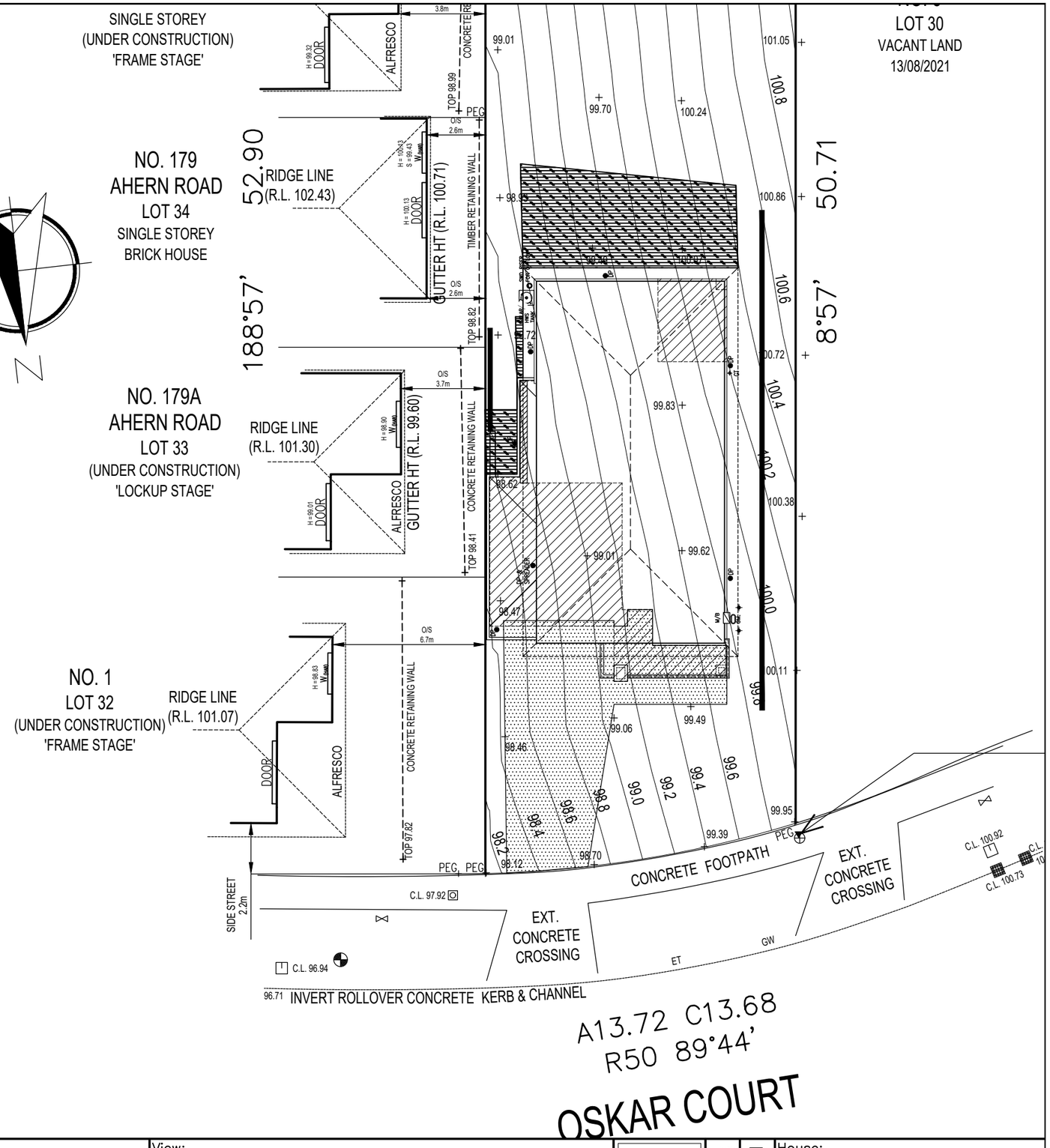

Xpress Built by SIMONDS

SIMONDS HOMES VICTORIA P/L ACN 050 197 610
HEAD OFFICE 1ST FLOOR 570 ST KILDA ROAD, MELBOURNE VIC 3004
TELEPHONE (03) 9682 0700
E-MAIL enquiries@simonds.com.au
ENQUIRIES 1300 SIMONDS
INTERNET www.simonds.com.au

Spec: XPRESS

FINAL DRAWINGS

COMPLETED BY: Amy Ibrahim

© COPYRIGHT 2003 SIMONDS IP Pty Ltd (ACN 144 839 805) (ABN 56 144 839 805) NOT TO BE REPRODUCED IN PART OR WHOLE WITHOUT EXPRESS PERMISSION.

View: SHADOW DIAGRAM @ 12 Noon (22nd SEP. & MAR)

Customer:

Address: LOT 31, 3 OSKAR COURT, PAKENHAM

Version 1.0

Sheet No: 1.2

Scale: 1:200@A3

Date: 18-Nov-21

House: CAYENNE 29_270-12.5A

Facade: MULBERRY

Drawn: D.H.P

Job No: 69975 ACC

Design: X00X

Mastered: T.N

Checked: X00X

OVERSHADOWING & FENCING DIAGRAMS

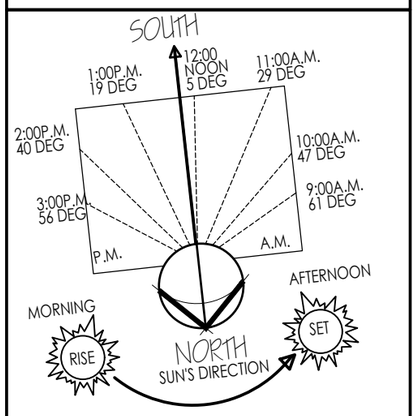

NOTE: PICTORIAL REPRESENTATION ONLY
NOT TO BE USED AS TRUE NORTH POINT FOR THIS JOB

SHADOW LOCATION TIME OF DAY

SEPTEMBER 22 (EQUINOX)

TIME	SHADOW LENGTH PER METRE HIGH	ALTITUDE SUN DEGREES	AZIMUTH
8:00 AM	2.60 METERS	21° DEG	73° DEG
9:00 AM	1.60 METERS	32° DEG	61° DEG
10:00 AM	1.15 METERS	41° DEG	47° DEG
11:00 AM	0.87 METERS	49° DEG	28° DEG
12:00 NOON	0.81 METERS	52° DEG	5° DEG
1:00 PM	0.84 METERS	50° DEG	341° DEG
2:00 PM	1.00 METERS	45° DEG	320° DEG
3:00 PM	1.37 METERS	36° DEG	304° DEG
4:00 PM	2.14 METERS	25° DEG	292° DEG

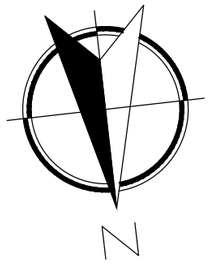

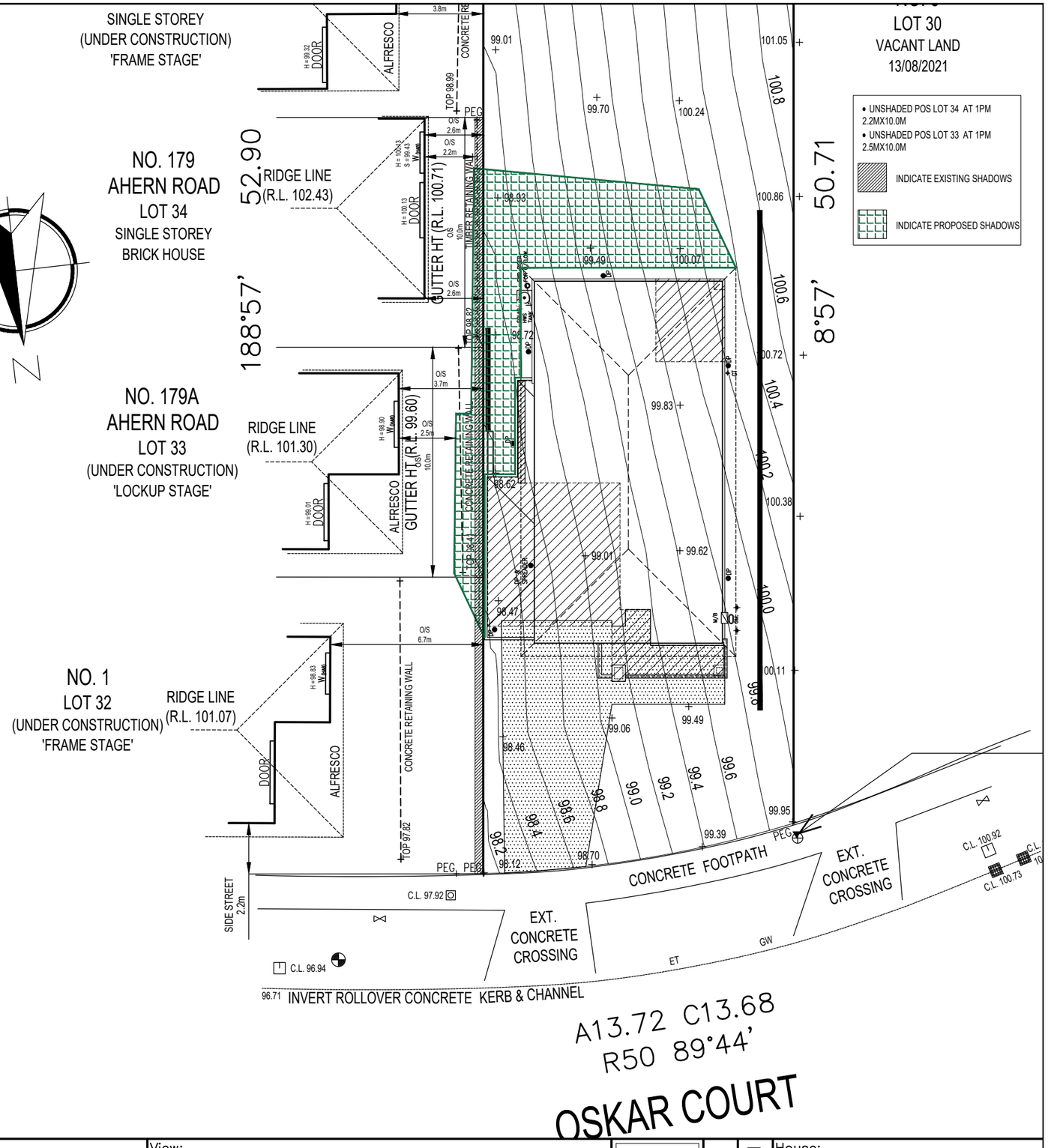

Xpress Built by SIMONDS

SIMONDS HOMES VICTORIA P/L ACN 050 197 610
HEAD OFFICE 1ST FLOOR 570 ST KILDA ROAD, MELBOURNE VIC 3004
TELEPHONE (03) 9682 0700
E-MAIL enquiries@simonds.com.au
ENQUIRIES 1300 SIMONDS
INTERNET www.simonds.com.au

Spec: XPRESS

FINAL DRAWINGS

COMPLETED BY: Amy Ibrahim

© COPYRIGHT 2003 SIMONDS IP Pty Ltd (ACN 144 839 805) (ABN 56 144 839 805) NOT TO BE REPRODUCED IN PART OR WHOLE WITHOUT EXPRESS PERMISSION.

View: SHADOW DIAGRAM @ 1PM (22nd SEP. & MAR)

Customer:

Address: LOT 31, 3 OSKAR COURT, PAKENHAM

Version 1.0

Sheet No: 1.2

Scale: 1:200@A3

Date: 18-Nov-21

House: CAYENNE 29_270-12.5A

Facade: MULBERRY

Drawn: D.H.P

Job No: 69975 ACC

Design: X00X

Mastered: T.N

Checked: X00X

OVERSHADOWING & FENCING DIAGRAMS

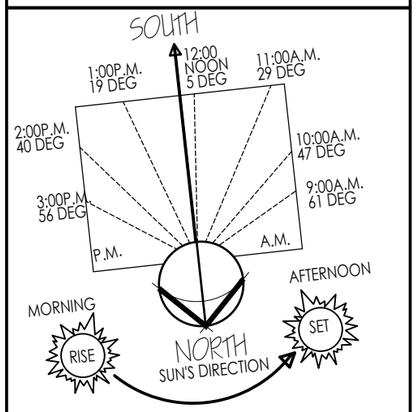

NOTE: PICTORIAL REPRESENTATION ONLY
NOT TO BE USED AS TRUE NORTH POINT FOR THIS JOB

SHADOW LOCATION TIME OF DAY

SEPTEMBER 22 (EQUINOX)

TIME	SHADOW LENGTH PER METRE HIGH	ALTITUDE SUN DEGREES	AZIMUTH
8:00 AM	2.60 METERS	21° DEG	73° DEG
9:00 AM	1.60 METERS	32° DEG	61° DEG
10:00 AM	1.15 METERS	41° DEG	47° DEG
11:00 AM	0.87 METERS	49° DEG	28° DEG
12:00 NOON	0.81 METERS	52° DEG	5° DEG
1:00 PM	0.84 METERS	50° DEG	341° DEG
2:00 PM	1.00 METERS	45° DEG	320° DEG
3:00 PM	1.37 METERS	36° DEG	304° DEG
4:00 PM	2.14 METERS	25° DEG	292° DEG

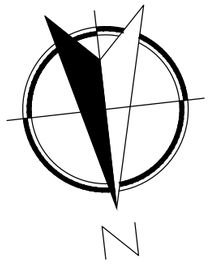

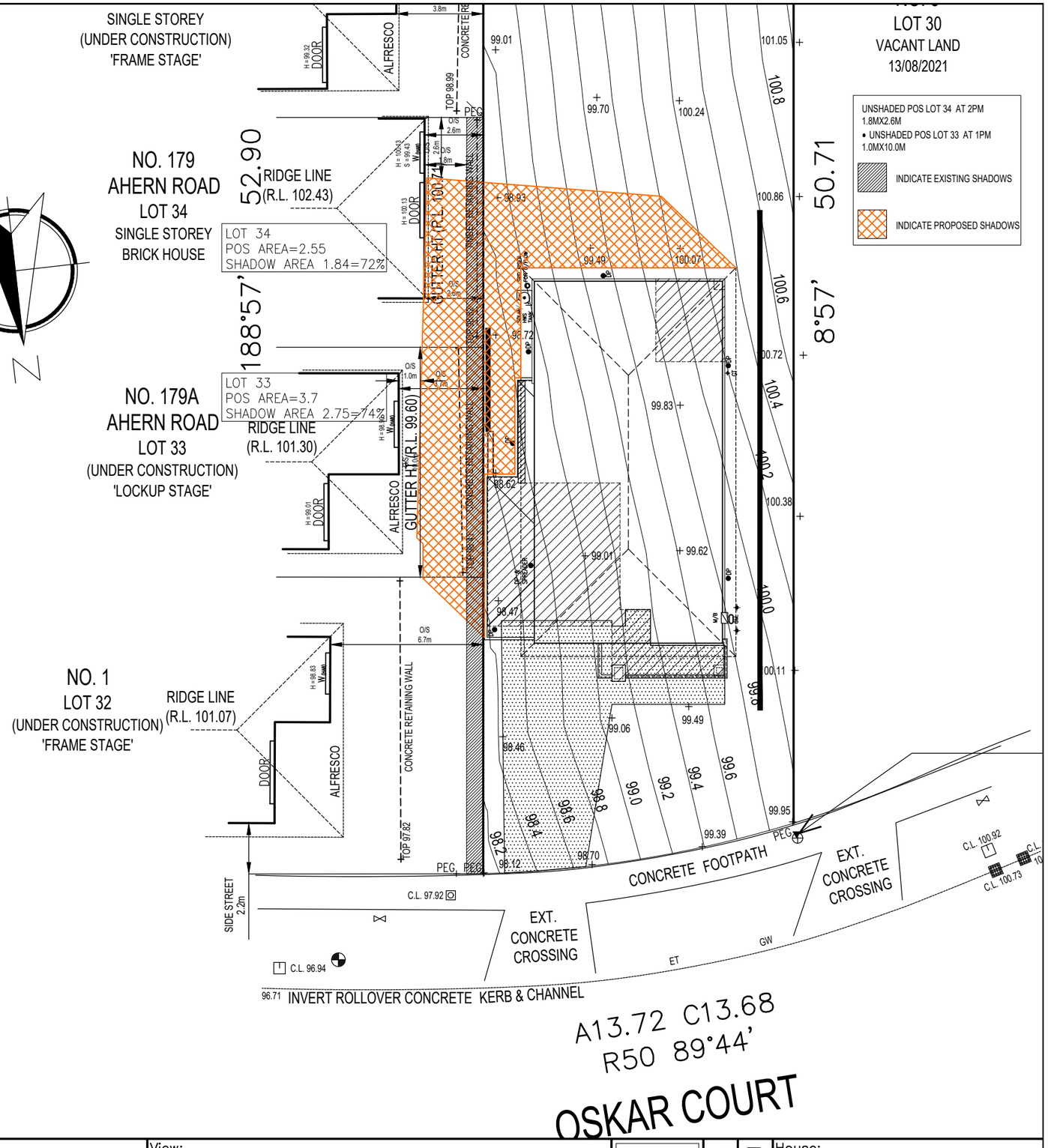

Xpress Built by SIMONDS

SIMONDS HOMES VICTORIA P/L ACN 050 197 610
HEAD OFFICE 1ST FLOOR 570 ST KILDA ROAD, MELBOURNE VIC 3004
TELEPHONE (03) 9682 0700
E-MAIL enquiries@simonds.com.au
ENQUIRIES 1300 SIMONDS
INTERNET www.simonds.com.au

Spec: XPRESS

FINAL DRAWINGS

COMPLETED BY: Amy Ibrahim

© COPYRIGHT 2003 SIMONDS IP Pty Ltd (ACN 144 839 805) (ABN 56 144 839 805) NOT TO BE REPRODUCED IN PART OR WHOLE WITHOUT EXPRESS PERMISSION.

View: SHADOW DIAGRAM @ 2PM (22nd SEP. & MAR)

Customer:

Address: LOT 31, 3 OSKAR COURT, PAKENHAM

Version 1.0

Sheet No: 1.2

Scale: 1:200@A3

Date: 18-Nov-21

House: CAYENNE 29_270-12.5A

Facade: MULBERRY

Drawn: D.H.P

Job No: 69975 ACC

Design: X00X

Mastered: T.N

Checked: X00X

OVERSHADOWING & FENCING DIAGRAMS

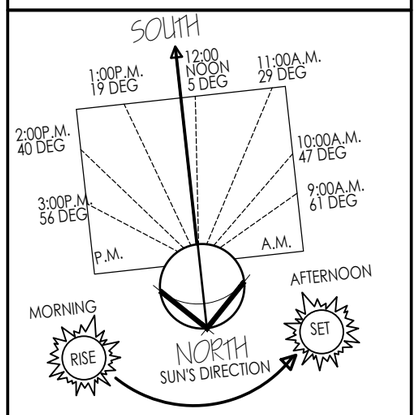

NOTE: PICTORIAL REPRESENTATION ONLY
NOT TO BE USED AS TRUE NORTH POINT FOR THIS JOB

SHADOW LOCATION TIME OF DAY

3:00 PM - SEPTEMBER 22

SEPTEMBER 22 (EQUINOX)

TIME	SHADOW LENGTH PER METRE HIGH	ALTITUDE SUN DEGREES	AZIMUTH
8:00 AM	2.60 METERS	21° DEG	73° DEG
9:00 AM	1.60 METERS	32° DEG	61° DEG
10:00 AM	1.15 METERS	41° DEG	47° DEG
11:00 AM	0.87 METERS	49° DEG	28° DEG
12:00 NOON	0.81 METERS	52° DEG	5° DEG
1:00 PM	0.84 METERS	50° DEG	341° DEG
2:00 PM	1.00 METERS	45° DEG	320° DEG
3:00 PM	1.37 METERS	36° DEG	304° DEG
4:00 PM	2.14 METERS	25° DEG	292° DEG

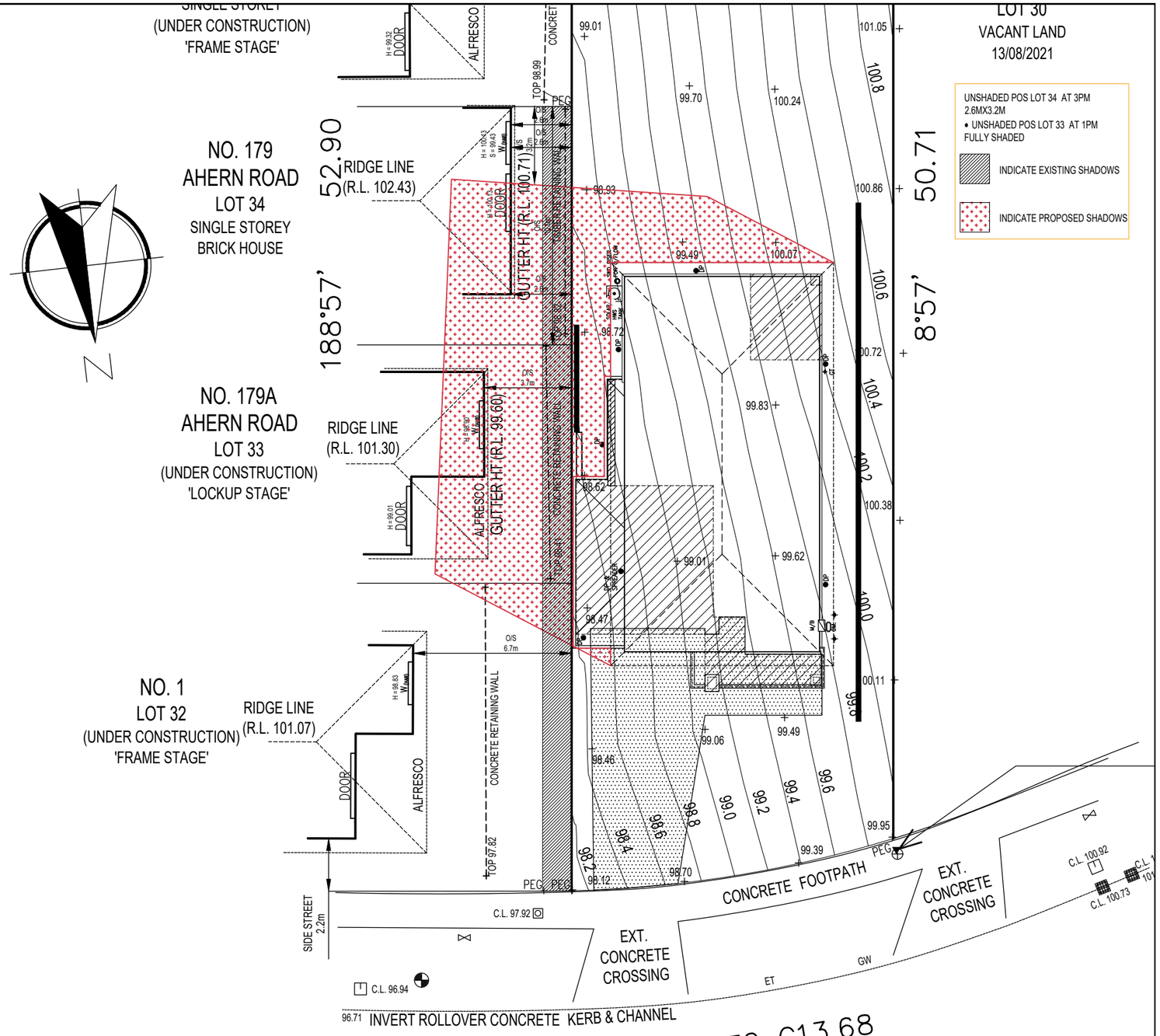

Xpress Built by SIMONDS

SIMONDS HOMES VICTORIA P/L ACN 050 197 610
HEAD OFFICE 1ST FLOOR 570 ST KILDA ROAD, MELBOURNE VIC 3004
TELEPHONE (03) 9682 0700
E-MAIL enquiries@simonds.com.au
ENQUIRIES 1300 SIMONDS
INTERNET www.simonds.com.au

Spec: XPRESS

FINAL DRAWINGS

COMPLETED BY: Amy Ibrahim

© COPYRIGHT 2003 SIMONDS IP Pty Ltd (ACN 144 839 805) (ABN 56 144 839 805) NOT TO BE REPRODUCED IN PART OR WHOLE WITHOUT EXPRESS PERMISSION.

View: SHADOW DIAGRAM @ 3PM (22nd SEP. & MAR)

Customer:

Address: LOT 31, 3 OSKAR COURT, PAKENHAM

Version 1.0

Sheet No: 1.2

Scale: 1:200@A3

Date: 18-Nov-21

House: CAYENNE 29_270-12.5A

Facade: MULBERRY

Drawn: D.H.P

Job No: 69975 ACC

Design: X00X

Mastered: T.N

Checked: X00X

ELEVATION B

ALL GLASS TO CONFORM WITH AS1288-2006 : GLASS IN BUILDINGS

– DENOTES 280mm DEEP BULKHEAD TO PLASTER FACE – UNLESS NOTED OTHERWISE. REFER ALSO INTERNAL ELEVATIONS.

NOTE: DIMENSIONS LOCATING WINDOWS ARE NOMINAL.

NOTE: ALL INTERNAL DOOR HEIGHTS TO BE 2040mm. HIGH UNLESS OTHERWISE NOTED.

NOTE: DIMENSIONS FOR WALL SETOUT ARE NOMINAL & TO FACE OF STUDWORK.

NOTE: BULKHEADS & NIBS ARE NOMINAL SIZES ONLY.

NOTE: LIFT-OFF HINGES TO W.C. DOOR UNLESS DISTANCE TO PAN IS 1.2m OR GREATER

NOTE: DOWN PIPE LOCATIONS ARE INDICATIVE, EXACT LOCATIONS TO BE CONFIRMED PRIOR TO POP PENETRATIONS TO GUTTERING.

– DENOTES R2.0 INSULATION BATTS TO INTERNAL WALLS'

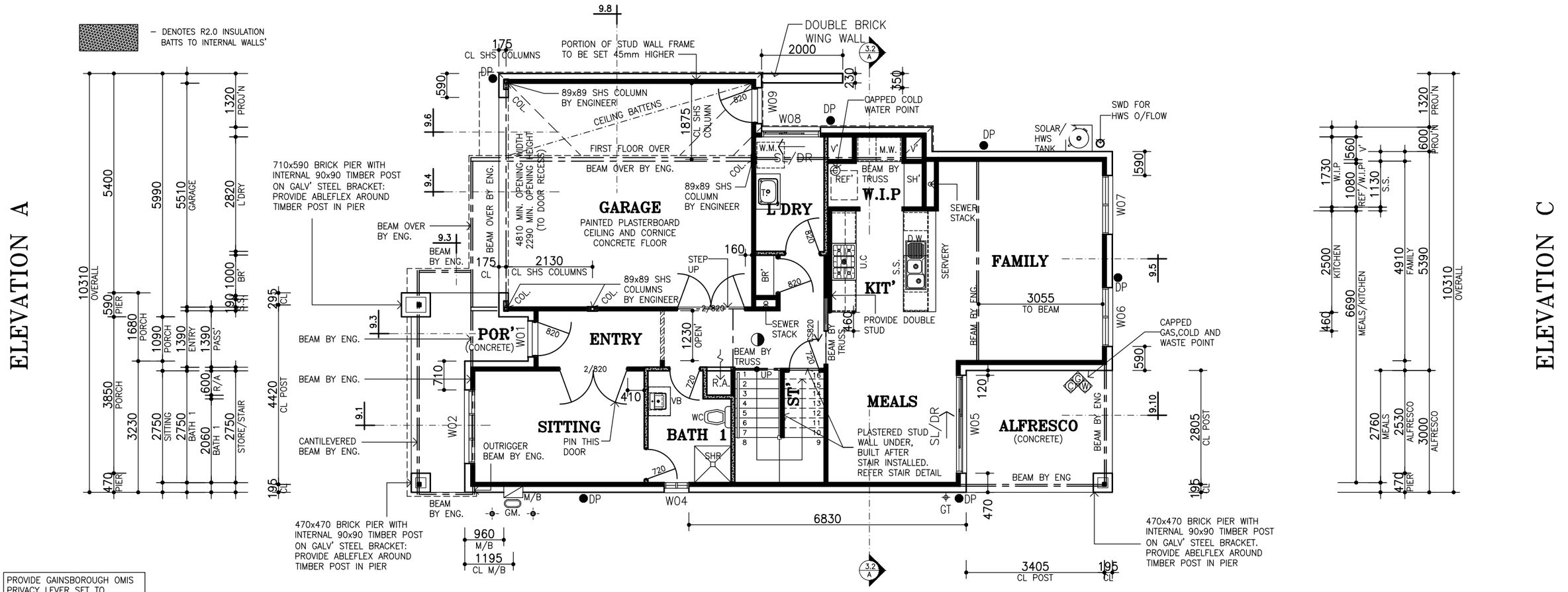

PROVIDE GAINSBOROUGH OMIS PRIVACY LEVER SET TO BATHROOM & ENSUITE DOOR.

PROVIDE SEALED INSITU WASTE CONNECTION TO GROUND FLOOR BATH & WC, GROUND & FIRST FLOOR SHOWER WASTE POINTS

SMOKE DETECTOR TO A.S 3786 – MULTIPLE POINTS TO BE INTERCONNECTED

MH MANHOLE

ALL WET AREAS TO COMPLY WITH A.S. 3740

NOTE: ALL SANITARY COMPARTMENTS TO COMPLY WITH CURRENT B.C.A. PART 3.8.3.3.

NOTE: REF. FRE. WM. CD. DW INDICATE POSITION ONLY.

ELEVATION D

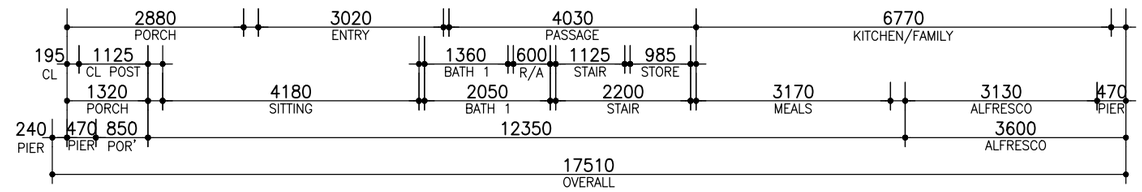

AREAS.				
Ground Floor:	96.47	sq.m	10.38	sqrs
First Floor:	126.61	sq.m	13.63	sqrs
Subtotal:	223.08	sq.m	24.01	sqrs
Porch:	8.82	sq.m	0.95	sqrs
Balcony:	8.49	sq.m	0.91	sqrs
Garage:	36.37	sq.m	3.91	sqrs
Alfresco:	10.80	sq.m	1.16	sqrs
Total Area:	287.56	sq.m	30.95	sqrs

Xpress Built by SIMONDS

SIMONDS HOMES VICTORIA P/L ACN 050 197 610
HEAD OFFICE 1ST FLOOR 570 ST KILDA ROAD, MELBOURNE VIC 3004
TELEPHONE (03) 9682 0700
E-MAIL enquiries@simonds.com.au
ENQUIRIES 1300 SIMONDS
INTERNET www.simonds.com.au

Spec: XPRESS

FINAL DRAWINGS

COMPLETED BY: Amy Ibrahim

© COPYRIGHT 2003 SIMONDS IP Pty Ltd (ACN 144 839 805) (ABN 56 144 839 805) NOT TO BE REPRODUCED IN PART OR WHOLE WITHOUT EXPRESS PERMISSION.

View: GROUND FLOOR PLAN

Customer:

Address: LOT 31, 3 OSKAR COURT, PAKENHAM

Version 1.0

Sheet No: 2.1

Scale: 1:100@A3

Date: 18-Nov-21

House: CAYENNE 29_270-12.5A

Facade: MULBERRY

Drawn: D.H.P

Job No: 69975 ACC

Design: X00X

Mastered: T.N

Checked: X00X

ELEVATION B

ALL GLASS TO CONFORM WITH AS1288-2006 : GLASS IN BUILDINGS

– DENOTES 300mm DEEP BULKHEAD TO PLASTER FACE – UNLESS NOTED OTHERWISE. REFER ALSO INTERNAL ELEVATIONS.

NOTE: DIMENSIONS LOCATING WINDOWS ARE NOMINAL.

NOTE: ALL INTERNAL DOOR HEIGHTS TO BE 2040mm. HIGH UNLESS OTHERWISE NOTED.

NOTE: DIMENSIONS FOR WALL SETOUT ARE NOMINAL & TO FACE OF STUDWORK.

NOTE: BULKHEADS & NIBS ARE NOMINAL SIZES ONLY.

NOTE: LIFT-OFF HINGES TO W.C. DOOR UNLESS DISTANCE TO PAN IS 1.2m OR GREATER

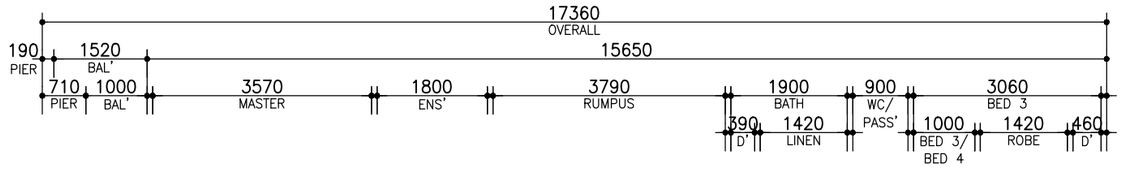

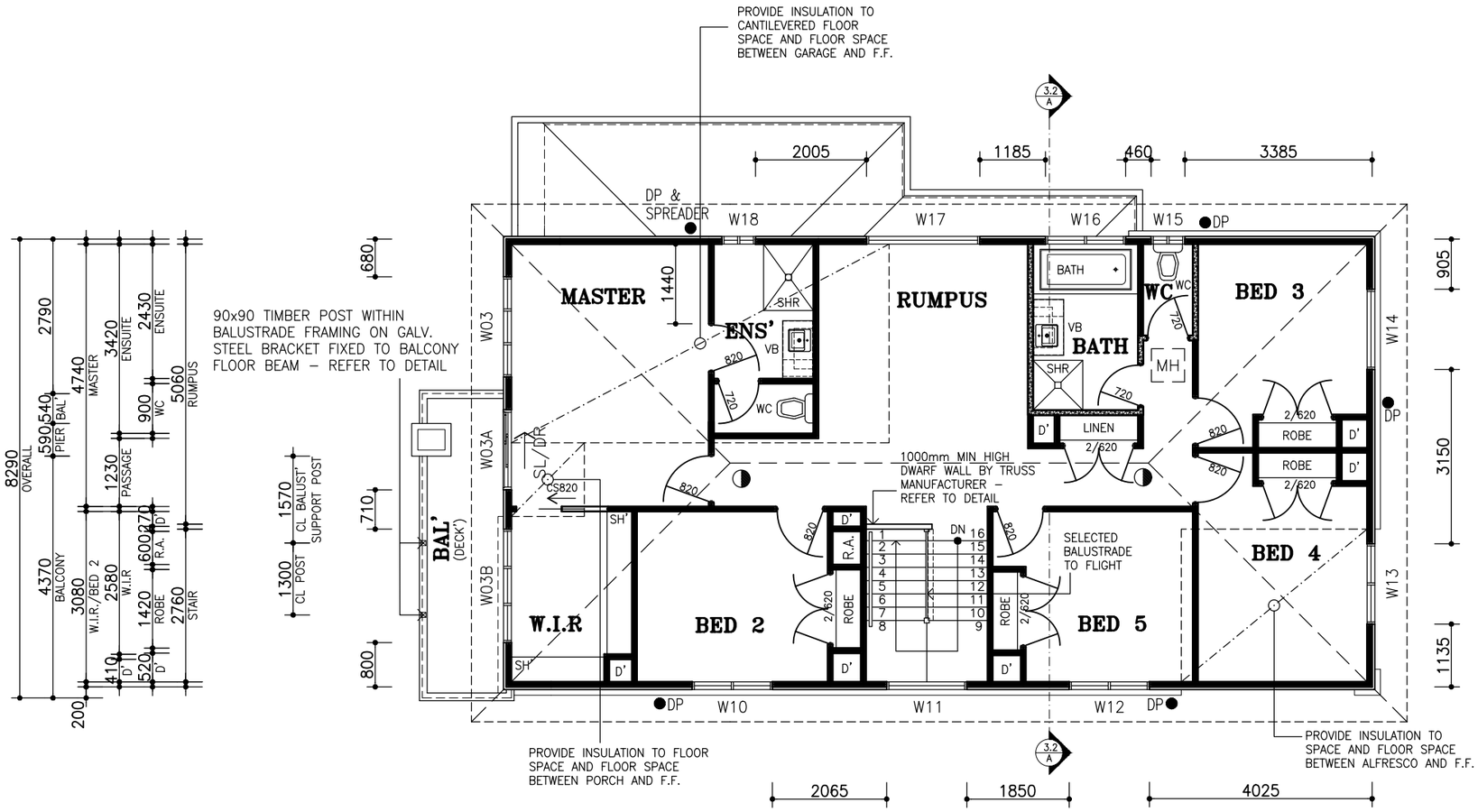

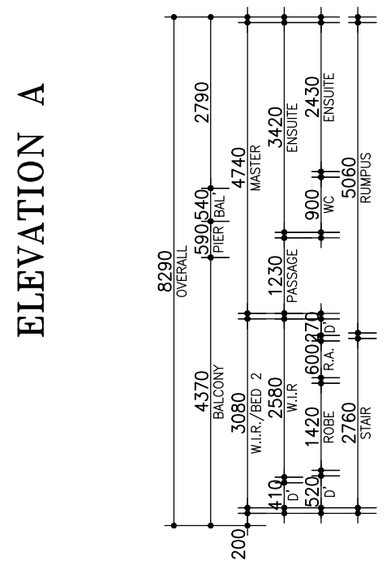

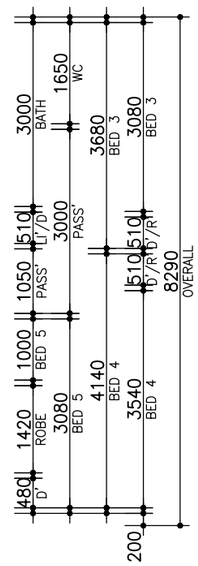

– DENOTES R2.0 INSULATION BATTS TO INTERNAL WALLS'

PROVIDE SEALED INSITU WASTE CONNECTION TO GROUND FLOOR BATH & WC, GROUND & FIRST FLOOR SHOWER WASTE POINTS

SMOKE DETECTOR TO A.S 3786 – MULTIPLE POINTS TO BE INTERCONNECTED

MH MANHOLE

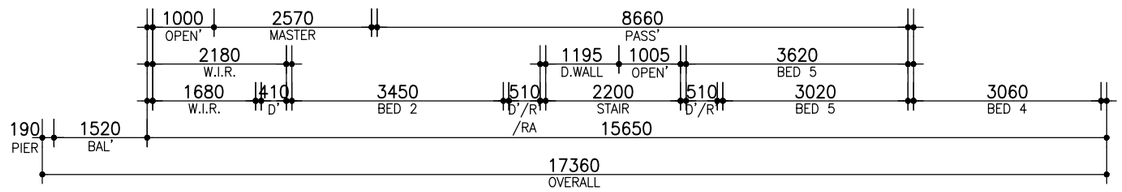

ELEVATION D

Xpress Built by SIMONDS

SIMONDS HOMES VICTORIA P/L ACN 050 197 610
HEAD OFFICE 1ST FLOOR 570 ST KILDA ROAD, MELBOURNE VIC 3004
TELEPHONE (03) 9682 0700
E-MAIL enquiries@simonds.com.au
ENQUIRIES 1300 SIMONDS
INTERNET www.simonds.com.au

Spec: XPRESS

FINAL DRAWINGS

COMPLETED BY: Amy Ibrahim

© COPYRIGHT 2003 SIMONDS IP Pty Ltd (ACN 144 839 805) (ABN 56 144 839 805) NOT TO BE REPRODUCED IN PART OR WHOLE WITHOUT EXPRESS PERMISSION.

View: FIRST FLOOR PLAN

Customer:

Address: LOT 31, 3 OSKAR COURT, PAKENHAM

Version 1.0

Sheet No: 2.2

Scale: 1:100@A3

Date: 18-Nov-21

House: CAYENNE 29_270-12.5A

Facade: MULBERRY

Drawn: D.H.P

Job No: 69975 ACC

Design: X00X

Mastered: T.N

Checked: X00X

ALL GLASS TO CONFORM WITH AS1288-2006 : GLASS IN BUILDINGS

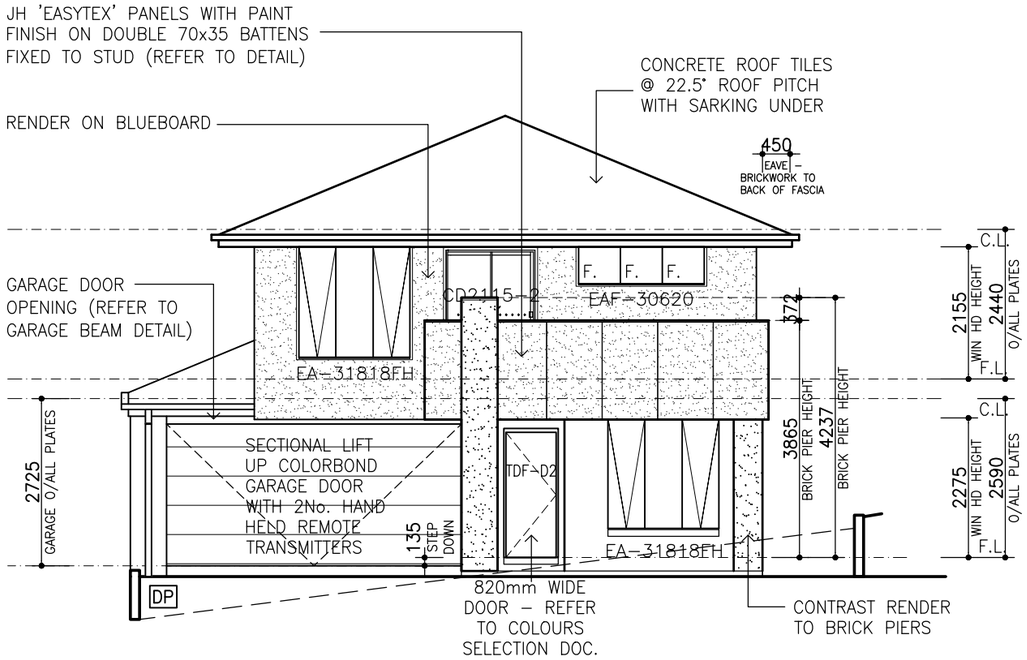

ELEVATION A

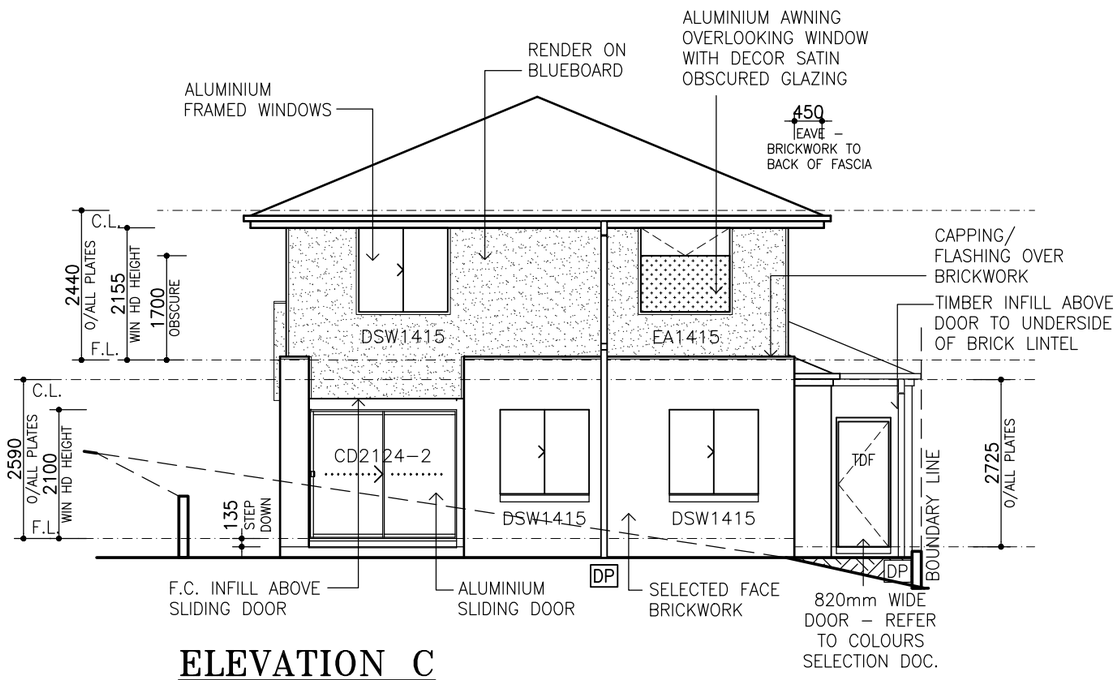

ELEVATION C

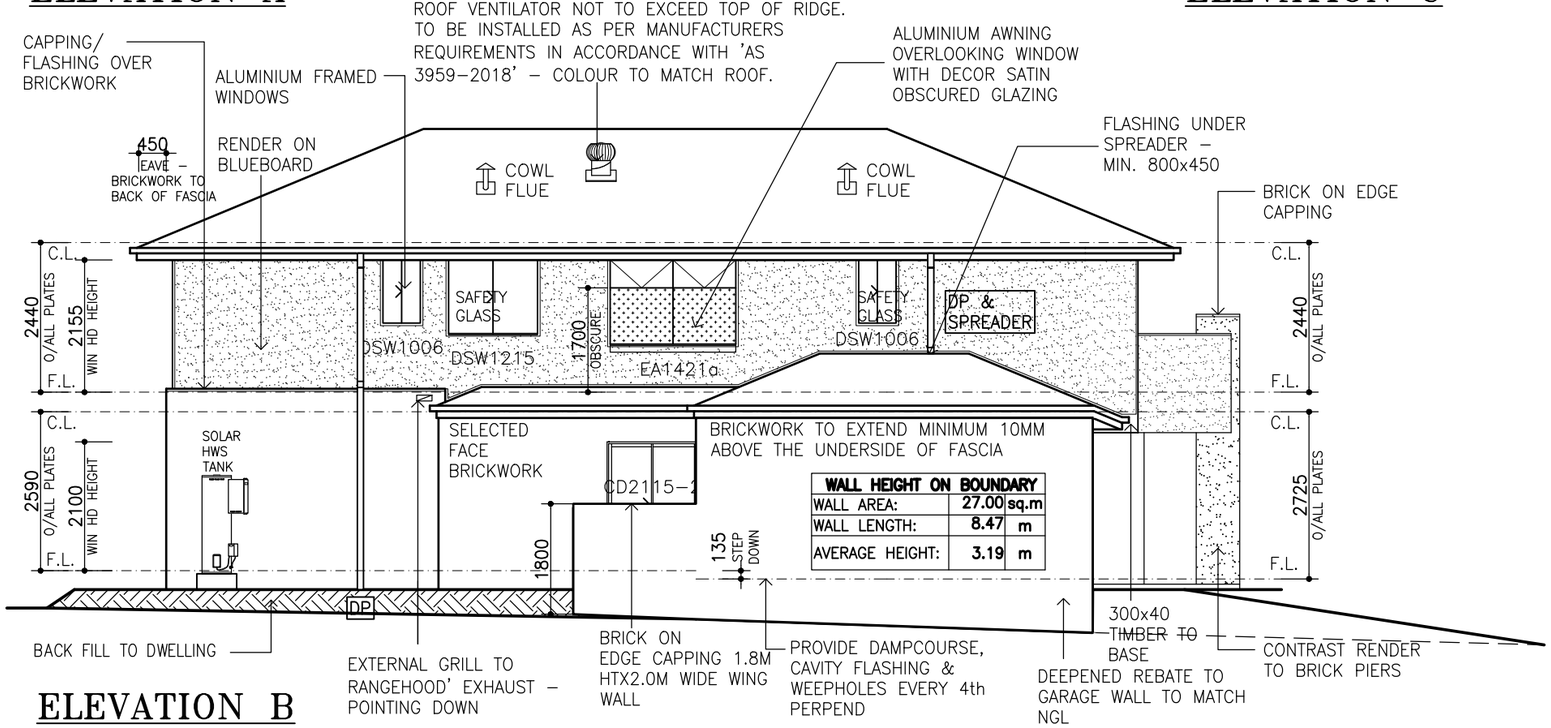

WALL HEIGHT ON BOUNDARY		
WALL AREA:	27.00	sq.m
WALL LENGTH:	8.47	m
AVERAGE HEIGHT:	3.19	m

ELEVATION B

DENOTES SLIDING WINDOW

DENOTES AWNING WINDOW

DENOTES LOW-E GLAZING

DENOTES DOUBLE GLAZING

DENOTES DECOR SATIN GLAZING

DENOTES TRANSLUCENT GLAZING

NOTE: ALL WINDOWS TO BE SET AT 2100mm O/A HEAD UNLESS NOMINATED OTHERWISE/IF BRICKWORK OVER, ADJUST HEAD HEIGHT TO WITHIN 5-10mm OF LINTEL

NOTE: PROVIDE BACKFILL TO ALL EXTERNAL OPENINGS TO PROVIDE A 190mm MAX. STEP UP INTO HOUSE AS PER BCA REQUIREMENTS.

NOTE: CONTROL JOINTS TO ENGINEERS RECOMMENDATIONS

Xpress Built by SIMONDS

SIMONDS HOMES VICTORIA P/L ACN 050 197 610
HEAD OFFICE 1ST FLOOR 570 ST KILDA ROAD, MELBOURNE VIC 3004
TELEPHONE (03) 9682 0700
E-MAIL enquiries@simonds.com.au
ENQUIRIES 1300 SIMONDS
INTERNET www.simonds.com.au

Spec: XPRESS

FINAL DRAWINGS

COMPLETED BY: Amy Ibrahim

© COPYRIGHT 2003 SIMONDS IP Pty Ltd (ACN 144 839 805) (ABN 56 144 839 805) NOT TO BE REPRODUCED IN PART OR WHOLE WITHOUT EXPRESS PERMISSION.

View: ELEVATIONS 1

Customer:

Address: LOT 31, 3 OSKAR COURT, PAKENHAM

Version 1.0

Sheet No: 3.1

Scale: 1:100@A3

Date: 18-Nov-21

House: CAYENNE 29_270-12.5A

Facade: MULBERRY

Drawn: D.H.P

Job No: 69975 ACC

Design: XOOX

Mastered: T.N

Checked: XOOX

ALL GLASS TO CONFORM WITH AS1288-2006 : GLASS IN BUILDINGS

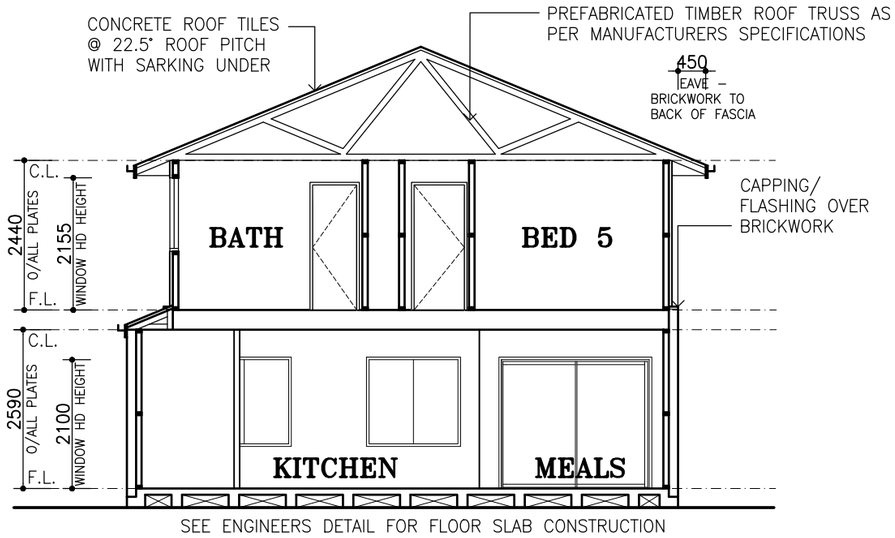

SECTION A–A

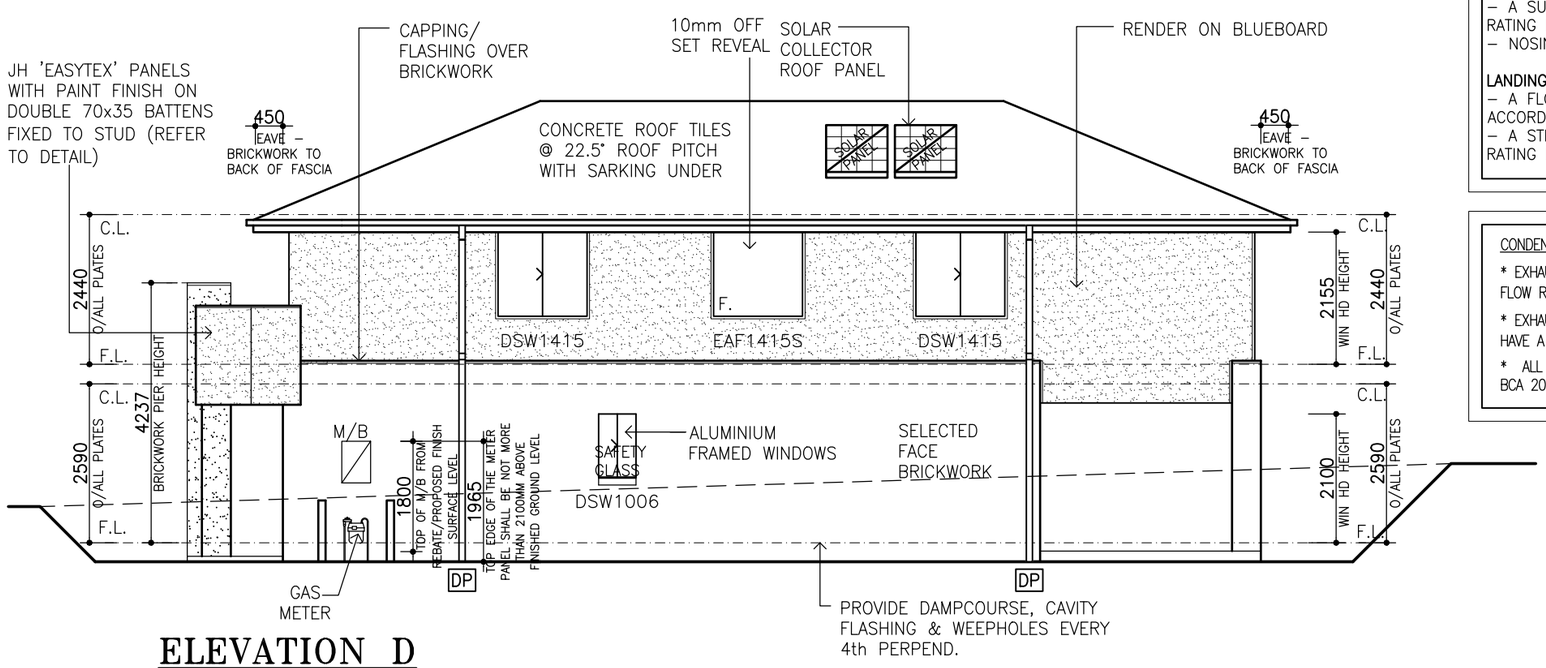

ELEVATION D

STANDARD INCLUSIONS FOR ENERGY EFFICIENCY REQUIREMENTS :

- AIRFLOW DRAFT STOPPERS TO EXHAUST FANS
- ALUMINIUM IMPROVED WINDOWS THROUGHOUT
- DOOR SEALS ONLY TO EXTERNAL DOORS AND INTERNAL GARAGE ACCESS DOOR
- SEALS AROUND ALL EXTERNAL WINDOWS
- R 2.5 GLASSWOOL BATTS TO EXT. WALLS OF DWELLING
- R 6.0 GLASSWOOL BATTS TO CEILINGS (EXCLUDING GARAGE)
- R 2.0 GLASSWOOL BATTS TO CEILINGS PERIMETER ONLY

NOTE:
PROVIDE INSULATION TO: EXTERNAL DWELLING WALLS, WALL BETWEEN GARAGE AND HOUSE AND CEILING DIRECTLY UNDER ROOF SPACE. EXCLUDES INSULATION TO GARAGE CEILING SPACE, GARAGE EXTERNAL WALLS AND GROUND FLOOR CEILING UNDER 1ST FLOOR OF DOUBLE STOREY HOMES.

HEATING AND COOLING DUCTWORK

DUCTWORK FOR HEATING & COOLING SYSTEMS SHALL COMPLY WITH A.S. 4254 & A.S./N.Z.S. 4859.1– IN ACCORDANCE WITH BCA TABLE FOR CLIMATE ZONE REQUIREMENTS

N.B. DOUBLE STOREY HOUSE TYPES.

ALL WINDOWS TO BEDROOMS SHALL COMPLY WITH BCA CLAUSE 3.9.2.5. AND THOSE ON THE FIRST FLOOR WILL BE PERMITTED TO OPEN NOT MORE THAN 125mm

SLIP RESISTANCE FOR STAIRS & LANDINGS.

STAIRWAY TREADS SHALL HAVE:–
– A SURFACE FINISH OR COVERING WITH SLIP RESISTANCE RATING IN ACCORDANCE WITH AS 4586 OR,
– NOSING STRIPS IN ACCORDANCE WITH AS 4586.

LANDINGS SHALL HAVE:–
– A FLOOR SURFACE WITH SLIP RESISTANCE RATING IN ACCORDANCE WITH AS 4586 OR,
– A STRIP AT THE EDGE OF THE LANDING WITH SLIP RESISTANCE RATING IN ACCORDANCE WITH AS 4586.

CONDENSATION MANAGEMENT

* EXHAUST SYSTEM IN KITCHEN AND LAUNDRY MUST HAVE A MINIMUM FLOW RATE OF 40L/s
* EXHAUST SYSTEM IN BATHROOM OR SANITARY COMPARTMENT MUST HAVE A MINIMUM FLOW RATE OF 25L/s
* ALL EXHAUST FANS TO BE EXTERNALLY VENT TO COMPLY WITH BCA 2019 3.8.7

NOTE: ALL STRUCTURAL TIMBER SIZES TO BE IN ACCORDANCE WITH AS1684 NATIONAL TIMBER FRAMING CODE.

NOTE: ROOF TRUSSES TO MANUFACTURERS DESIGN & SPECIFICATION.

NOTE: REFER TO ALL ENGINEERS DETAILS FOR STRUCTURAL MEMBERS.

NOTE: ALL WINDOWS TO BE SET AT 2100mm O/A HEAD UNLESS NOMINATED OTHERWISE/IF BRICKWORK OVER, ADJUST HEAD HEIGHT TO WITHIN 5–10mm OF LINTEL.

NOTE: DIMENSIONS TO STRUCTURAL TIMBERS AND FACE OF BRICKS EXCLUDING BATTENS, PLASTERBOARD, ETC.

NOTE: WRITTEN DIMENSIONS TAKE PRECEDENCE OVER SCALE – UNLESS OTHERWISE INDICATED ALL WALL DIMENSIONS, EXTERNAL 240mm B/VENEER –INTERNAL 90mm TIMBER STUD.

NOTE: STEPS/STAIRS TREADS MIN 240mm RISERS MAX 190mm HANDRAILS & BALUSTRADE 1000mm MIN HIGH BALUSTERS MAX 125mm SPACING.

NOTE: NOMINATED THICKNESS AND SIZE OF MATERIALS IS INDICATIVE ONLY AND MAY BE VARIED – BUT NOT REDUCED – AT THE DISCRETION OF SIMONDS HOMES.

NOTE: FINISHED CEILING HEIGHT IS SUBJECT TO CEILING BATTENS (WHERE APPLICABLE), CEILING LINING AND FLOOR FINISH.

NOTE: PROVIDE BACKFILL TO ALL EXTERNAL OPENINGS TO PROVIDE A 190mm MAX. STEP UP INTO HOUSE AS PER BCA REQUIREMENTS.

NOTE: PROVIDE COMPACTED BACKFILL MIN 1.0m WIDE WITH MIN. 50mm FALL AWAY FROM PERIMETER OF FLOOR SLAB

NOTE: SOLAR COLLECTOR PANELS ROOF LOCATION IS INDICATIVE ONLY, LOCATION & SIZE IS DEPENDANT ON FINAL SITE ORIENTATION & TO MANUFACTURER'S RECOMMENDATION.

NOTE: CONTROL JOINTS TO ENGINEERS RECOMMENDATIONS.

NOTE: DOOR PULL HANDLES TO BE SET AT 55mm FROM THE EDGE OF DOOR.

NOTE: LIFT–OFF HINGES TO W.C. DOOR UNLESS DISTANCE TO PAN 1.2m OR GREATER.

NOTE: MANHOLE (MH) POSITION SHOWN ON PLAN IS INDICATIVE ONLY & IS SUBJECT TO LOCATION OF STRUCTURAL FRAMING.

NOTE: IN ACCORDANCE WITH AS 3700–2018 & AS 4773.2–2015 PROVIDE –

- DAMPCOURSE WITH WEEPHOLES EVERY 4th PERPEND AROUND THE BUILDING.
- PROVIDE CAVITY FLASHING AT ALL POINTS WHERE THE CAVITY IS INTERRUPTED BY A STRUCTURAL ELEMENT OR OPENING.

DENOTES SLIDING WINDOW

DENOTES AWNING WINDOW

DENOTES LOW–E GLAZING

DENOTES DOUBLE GLAZING

DENOTES DECOR SATIN GLAZING

DENOTES TRANSLUCENT GLAZING

Xpress Built by SIMONDS

SIMONDS HOMES VICTORIA P/L ACN 050 197 610
HEAD OFFICE 1ST FLOOR 570 ST KILDA ROAD, MELBOURNE VIC 3004
TELEPHONE (03) 9682 0700
E-MAIL enquiries@simonds.com.au
ENQUIRIES 1300 SIMONDS
INTERNET www.simonds.com.au

Spec: XPRESS

FINAL DRAWINGS

COMPLETED BY: Amy Ibrahim

© COPYRIGHT 2003 SIMONDS IP Pty Ltd (ACN 144 839 805) (ABN 56 144 839 805) NOT TO BE REPRODUCED IN PART OR WHOLE WITHOUT EXPRESS PERMISSION.

View: ELEVATIONS 2

Customer:

Address: LOT 31, 3 OSKAR COURT, PAKENHAM

Version 1.0

Sheet No: 3.2

Scale: 1:100@A3

Date: 18-Nov-21

House: CAYENNE 29_270–12.5A

Facade: MULBERRY

Drawn: D.H.P

Job No: 69975 ACC

Design: X00X

Mastered: T.N

Checked: X00X

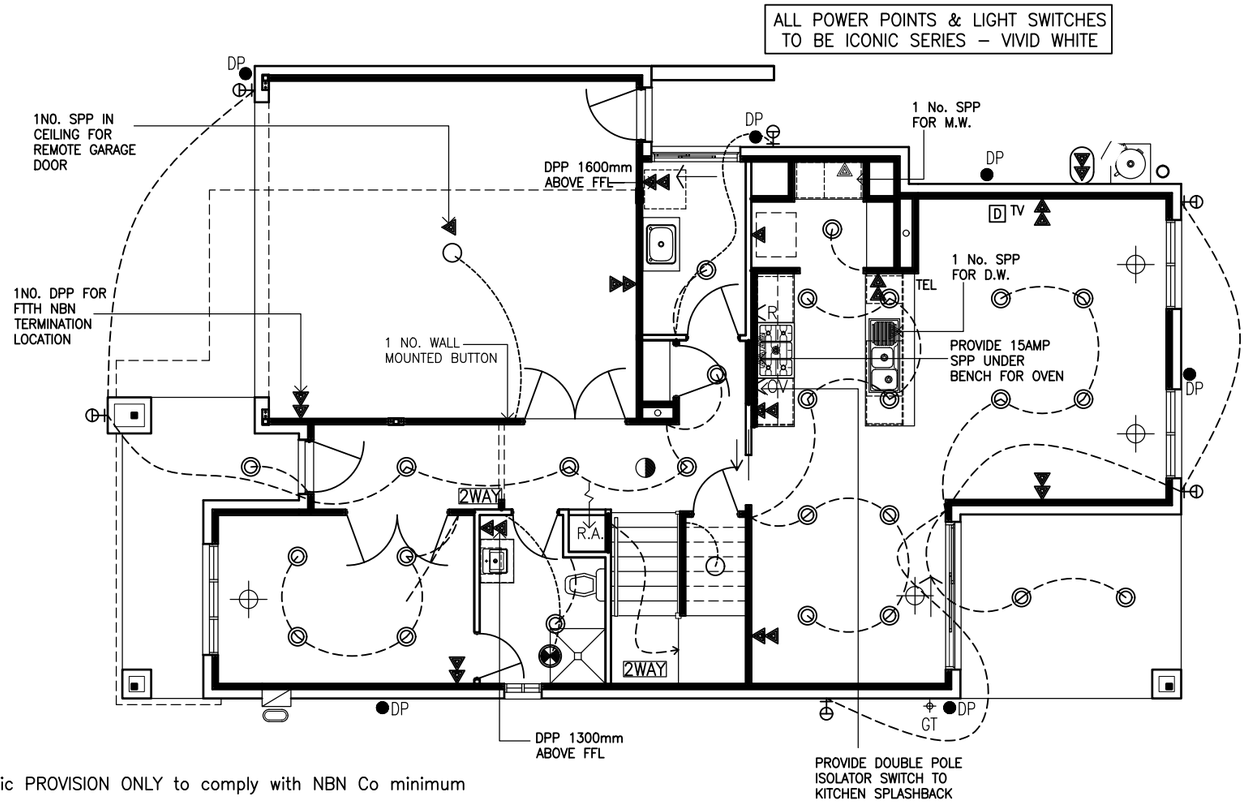

Provide NBN Co Fibre Optic PROVISION ONLY to comply with NBN Co minimum requirement including:
– 1 No. 25mm continuous flex conduit with drawstring from nominated garage return location to meterbox lead in location at side of home
– 1 No. Cat 6 data point (plated)
– 1 No. Cat 6 Telephone point (plated)
– 1 No. Cat 6 data return (plated) located in garage
– 1 No. Cat 6 Telephone return (plated) located in garage
– 2 No. Patch leads to be left plugged into each of the return points in garage
NOTE: Delete standard Telephone point
NOTE: All standard TV points are to remain
NOTE: Includes power point as required
NOTE: Antenna to home not included
NOTE: Includes drawstring conduit from Telstra/service pit to side of home
NOTE: Client to arrange service connection, NBN Co. equipments including associated costs with certified service providers after hand over of house

Maximum Allowable:	INT–	WATTS	EXT–	WATTS
Internal Lights:	26	@11 Watts =		286.0
External Lights:	2	@11 Watts =		22.0
Garage Lights	1	@11 Watts =		11
		Total:		319.0

ELECTRICAL LEGEND (VIC)

- – __ LIGHT POINT
- – __ DOWNLIGHT POINT
- – __ DARWIN HUB
- – __ WALL MOUNTED INTERNAL LIGHT POINT
- – __ WALL MOUNTED EXTERNAL LIGHT POINT
- – __ FLUORESCENT LIGHT POINT
- – __ DARWIN CIRCADIAN DOWNLIGHT
- – __ GU10 FLUORESCENT DOWNLIGHTS – 18W COOL WHITE GLOBE
- – __ TRACK LIGHTING
- G – __ POWER POINT WITH GREEN SWITCH
- – __ SINGLE POWER POINT (SPP)
- – __ DOUBLE POWER POINT (DPP)

PPs and TV points in living areas, bedrooms, passageway and garage to be 300mm A.F.L. and Kitchen 150mm above bench. Telephone point on wall 1500mm A.F.L, light switches 1200mm A.F.L.

- D – __ DATA POINT
- OV – __ OVEN ISOLATION SWITCH to kitchen bench wall
- R – __ RANGEHOOD POWER SOCKET
- – __ EXTERNAL WEATHERPROOF SINGLE POWER POINT
- – __ EXTERNAL WEATHERPROOF DOUBLE POWER POINT
- – __ SMOKE DETECTOR – INTERLINKED TO COMPLY WITH NCC & AS 3786 1993)
- – __ EXHAUST FAN
- TV – __ TELEVISION POINT
- TEL – __ TELEPHONE POINT
- V – __ DUCTED VACUUM POINT
- – __ FLOODLIGHT WITH SENSOR
- – __ IXL TASTIC UNIT
- – __ SWEEP FAN
- – __ DUCTED HEATING ROUND CEILING REGISTER.
- HEAT – __ DUCTED HEATING UNIT + POWER POINT & LIGHT
- – __ EVAPORATIVE COOLING CEILING REGISTER
- COOLING UNIT – __ EVAPORATIVE COOLING UNIT + POWER POINT

NOTES:

- NOTE: POWER POINTS LOCATED TO VANITY BASINS TO BE 1300mm ABOVE FLOOR LEVEL
- PROVIDE 1 No. TEMPERATURE CONTROL DEVICE TO REGULATE HOT WATER SUPPLY TO BATHROOM, POWDER ROOM & ENSUITE TO CONFORM WITH PLUMBING AND DRAINAGE CODE AND PROVIDE SELF CERTIFICATION FOR GAS SERVICE
- FIRE RATED DUCTWORK TO DUCTED HEATING TO CONFORM WITH NEW STATE GOVERNMENT LEGISLATION
- EXTERNALLY DUCT RANGEHOOD EXHAUST FANS
- DUCT CEILING FANS OVER SHOWERS TO ROOF SPACE
- OUTLET POSITION ARE APPROXIMATE ONLY
- SWITCH FOR ROOF SPACE LIGHT TO BE WITHIN 900MM OF MANHOLE
- WHERE POSSIBLE LIGHT POINTS IN ROOF SPACE SHALL NOT BE CLOSER THAN 1800MM ABOVE PLATFORM
- EXTERNAL WEATHERPROOF POWER SUPPLY FOR REVERSE CYCLE COOLING UNITS SHOULD BE ON AN ISOLATED SWITCH.

Xpress Built by SIMONDS
SIMONDS HOMES VICTORIA P/L ACN 050 197 610
HEAD OFFICE 1ST FLOOR 570 ST KILDA ROAD, MELBOURNE VIC 3004
TELEPHONE (03) 9682 0700
E-MAIL enquiries@simonds.com.au
ENQUIRIES 1300 SIMONDS
INTERNET www.simonds.com.au

Spec: XPRESS
FINAL DRAWINGS
COMPLETED BY: Amy Ibrahim

© COPYRIGHT 2003 SIMONDS IP Pty Ltd (ACN 144 839 805) (ABN 56 144 839 805) NOT TO BE REPRODUCED IN PART OR WHOLE WITHOUT EXPRESS PERMISSION.

View: ELECTRICAL GROUND FLOOR PLAN
Customer:
Address: LOT 31, 3 OSKAR COURT, PAKENHAM

Version 1.0
Sheet No: 4.1
Scale: 1:100@A3
Date: 18-Nov-21

House: CAYENNE 29_270–12.5A
Facade: MULBERRY
Drawn: D.H.P
Job No: 69975 ACC
Design: X00X
Mastered: T.N
Checked: X00X

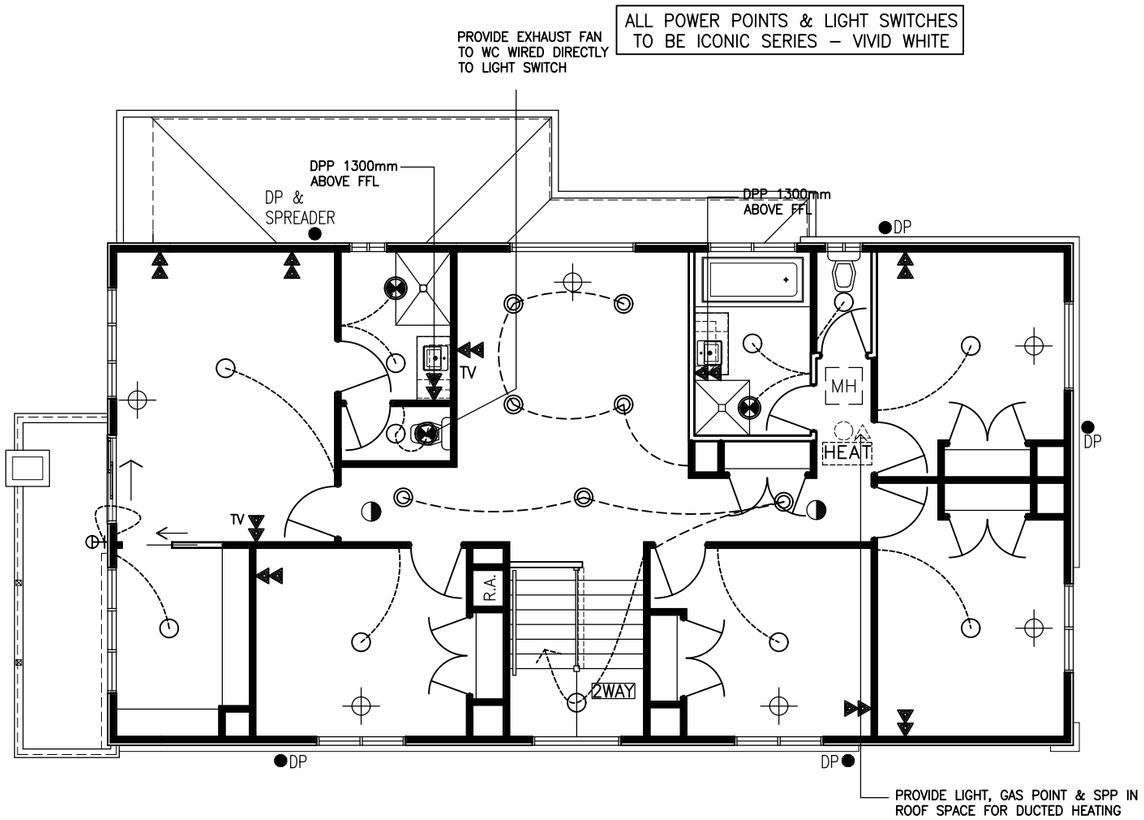

ELECTRICAL LEGEND (VIC)

- – __ LIGHT POINT
- – __ DOWNLIGHT POINT
- DH – __ DARWIN HUB
- – __ WALL MOUNTED INTERNAL LIGHT POINT
- – __ WALL MOUNTED EXTERNAL LIGHT POINT
- – __ FLUORESCENT LIGHT POINT
- – __ DARWIN CIRCADIAN DOWNLIGHT
- – __ GU10 FLUORESCENT DOWNLIGHTS – 18W COOL WHITE GLOBE
- – __ TRACK LIGHTING
- G – __ POWER POINT WITH GREEN SWITCH
- – __ SINGLE POWER POINT (SPP)
- – __ DOUBLE POWER POINT (DPP)

PPs and TV points in living areas, bedrooms, passageway and garage to be 300mm A.F.L. and Kitchen 150mm above bench. Telephone point on wall 1500mm A.F.L, light switches 1200mm A.F.L.

- D – __ DATA POINT
- <OV – __ OVEN ISOLATION SWITCH to kitchen bench wall
- <R – __ RANGEHOOD POWER SOCKET
- – __ EXTERNAL WEATHERPROOF SINGLE POWER POINT
- – __ EXTERNAL WEATHERPROOF DOUBLE POWER POINT
- – __ SMOKE DETECTOR – INTERLINKED TO COMPLY WITH NCC & AS 3786 1993)
- – __ EXHAUST FAN
- TV – __ TELEVISION POINT
- TEL – __ TELEPHONE POINT
- V – __ DUCTED VACUUM POINT
- – __ FLOODLIGHT WITH SENSOR
- – __ IXL TASTIC UNIT
- – __ SWEEP FAN
- – __ DUCTED HEATING ROUND CEILING REGISTER.
- HEAT – __ DUCTED HEATING UNIT + POWER POINT & LIGHT
- – __ EVAPORATIVE COOLING CEILING REGISTER
- COOLING UNIT – __ EVAPORATIVE COOLING UNIT + POWER POINT

NOTES:

- NOTE: POWER POINTS LOCATED TO VANITY BASINS TO BE 1300mm ABOVE FLOOR LEVEL
- PROVIDE 1 No. TEMPERATURE CONTROL DEVICE TO REGULATE HOT WATER SUPPLY TO BATHROOM, POWDER ROOM & ENSUITE TO CONFORM WITH PLUMBING AND DRAINAGE CODE AND PROVIDE SELF CERTIFICATION FOR GAS SERVICE
- FIRE RATED DUCTWORK TO DUCTED HEATING TO CONFORM WITH NEW STATE GOVERNMENT LEGISLATION
- EXTERNALLY DUCT RANGEHOOD EXHAUST FANS
- DUCT CEILING FANS OVER SHOWERS TO ROOF SPACE
- OUTLET POSITION ARE APPROXIMATE ONLY
- SWITCH FOR ROOF SPACE LIGHT TO BE WITHIN 900MM OF MANHOLE
- WHERE POSSIBLE LIGHT POINTS IN ROOF SPACE SHALL NOT BE CLOSER THAN 1800MM ABOVE PLATFORM
- EXTERNAL WEATHERPROOF POWER SUPPLY FOR REVERSE CYCLE COOLING UNITS SHOULD BE ON AN ISOLATED SWITCH.

Xpress Built by SIMONDS

SIMONDS HOMES VICTORIA P/L ACN 050 197 610
HEAD OFFICE 1ST FLOOR 570 ST KILDA ROAD, MELBOURNE VIC 3004
TELEPHONE (03) 9682 0700
E-MAIL enquiries@simonds.com.au
ENQUIRIES 1300 SIMONDS
INTERNET www.simonds.com.au

Spec: XPRESS

FINAL DRAWINGS

COMPLETED BY: Amy Ibrahim

© COPYRIGHT 2003 SIMONDS IP Pty Ltd (ACN 144 839 805) (ABN 56 144 839 805) NOT TO BE REPRODUCED IN PART OR WHOLE WITHOUT EXPRESS PERMISSION.

View: ELECTRICAL FIRST FLOOR PLAN

Customer:

Address: LOT 31, 3 OSKAR COURT, PAKENHAM

Version 1.0

Sheet No: 4.2

Scale: 1:100@A3

Date: 18-Nov-21

House: CAYENNE 29_270–12.5A

Facade: MULBERRY

Drawn: D.H.P

Job No: 69975 ACC

Design: X00X

Mastered: T.N

Checked: X00X

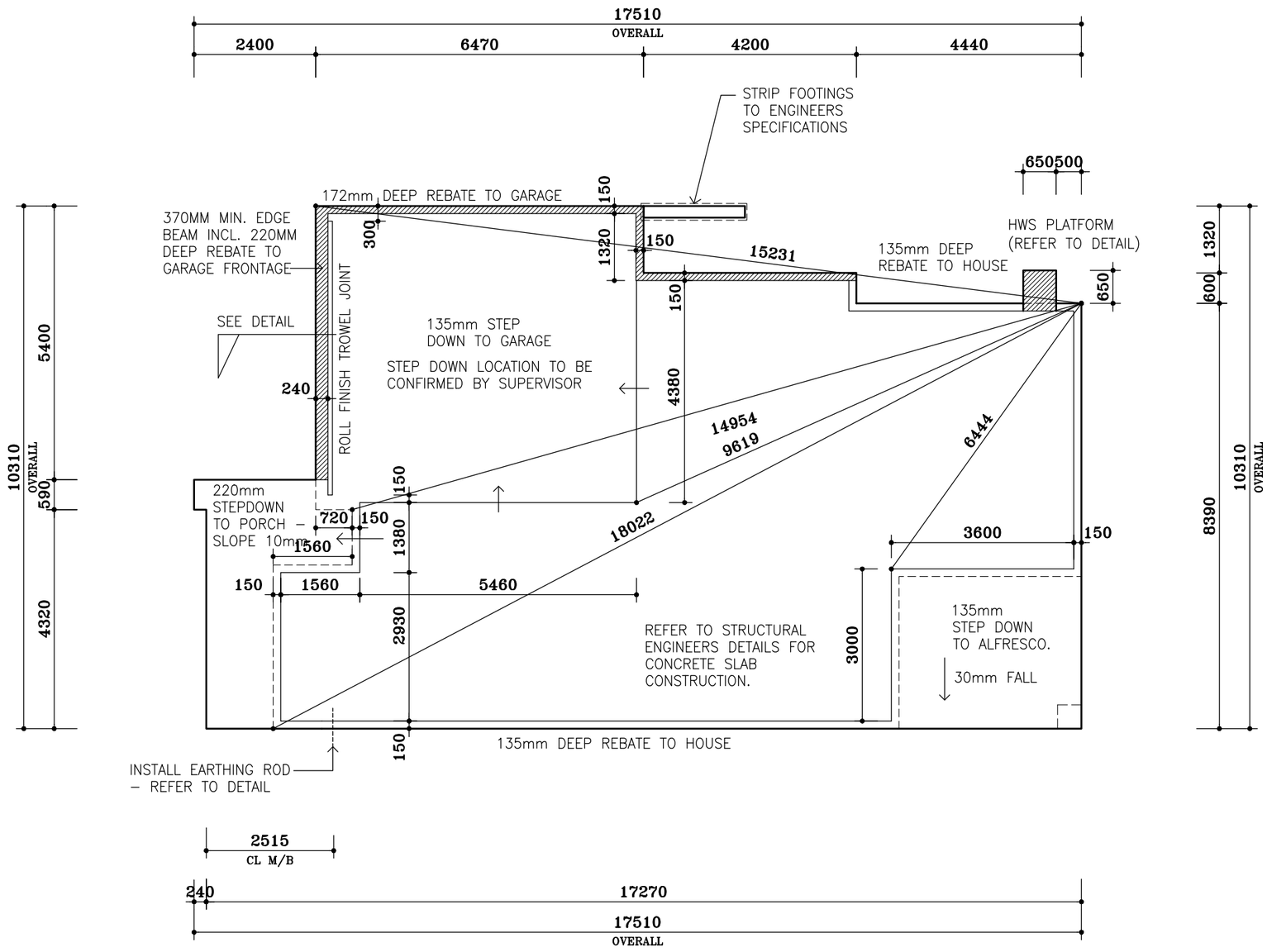

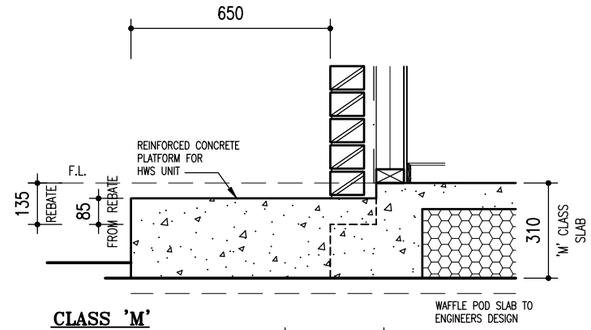

CLASS 'M'
HWS PLATFORM
Scale 1:20

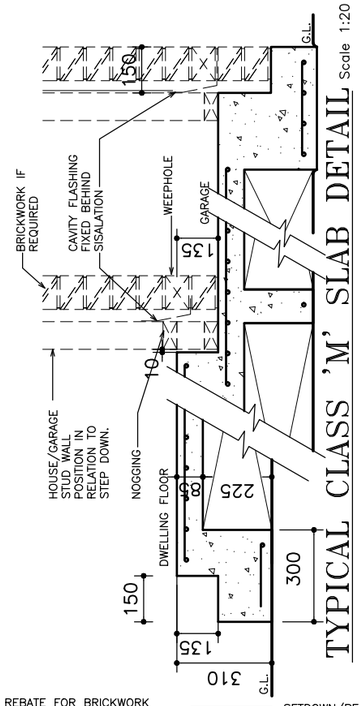

TYPICAL CLASS 'M' SLAB DETAIL Scale 1:20

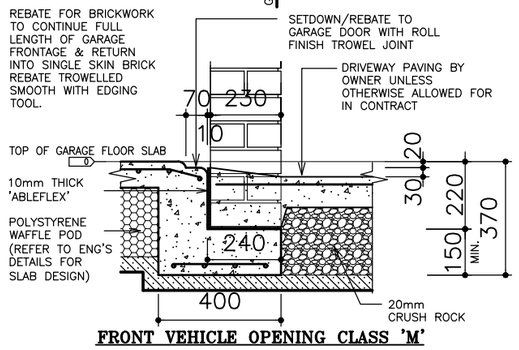

FRONT VEHICLE OPENING CLASS 'M'
(DRIVEWAY PAVING TO BACK OF FRONT WALL)
Scale 1:20

Xpress Built by SIMONDS

SIMONDS HOMES VICTORIA P/L ACN 050 197 610
HEAD OFFICE 1ST FLOOR 570 ST KILDA ROAD, MELBOURNE VIC 3004
TELEPHONE (03) 9682 0700
E-MAIL enquiries@simonds.com.au
ENQUIRIES 1300 SIMONDS
INTERNET www.simonds.com.au

Spec: XPRESS

FINAL DRAWINGS

COMPLETED BY: Amy Ibrahim

© COPYRIGHT 2003 SIMONDS IP Pty Ltd (ACN 144 839 805) (ABN 56 144 839 805) NOT TO BE REPRODUCED IN PART OR WHOLE WITHOUT EXPRESS PERMISSION.

View: SLAB PLAN

Customer:

Address: LOT 31, 3 OSKAR COURT, PAKENHAM

Version 1.0

Sheet No: 5.1

Scale: 1:100@A3

Date: 18-Nov-21

House: CAYENNE 29_270-12.5A

Facade: MULBERRY

Drawn: D.H.P

Job No: 69975 ACC

Design: X00X

Mastered: T.N

Checked: X00X

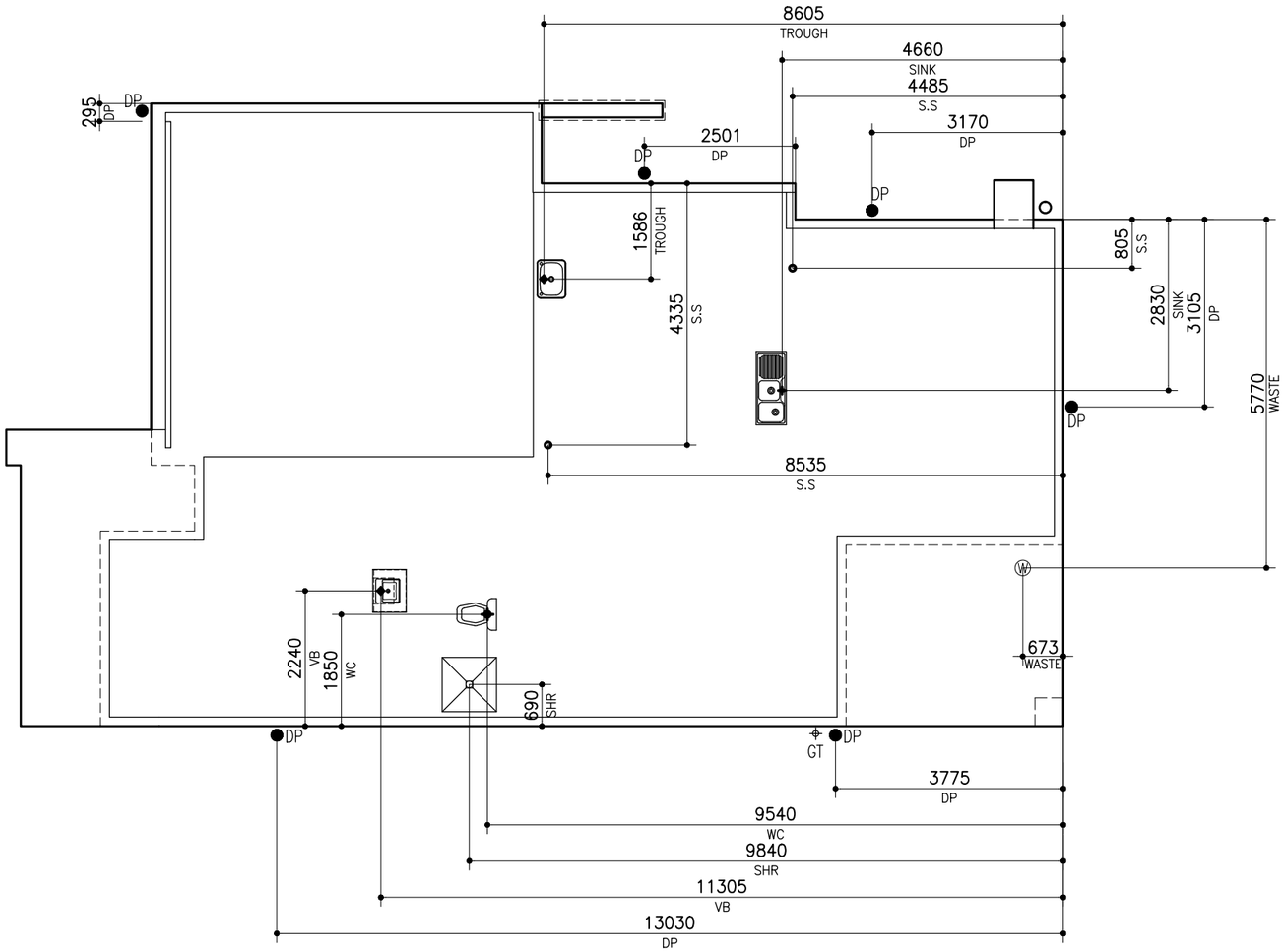

Xpress Built by SIMONDS

SIMONDS HOMES VICTORIA P/L ACN 050 197 610
HEAD OFFICE 1ST FLOOR 570 ST KILDA ROAD, MELBOURNE VIC 3004
TELEPHONE (03) 9682 0700
E-MAIL enquiries@simonds.com.au
ENQUIRIES 1300 SIMONDS
INTERNET www.simonds.com.au

Spec: XPRESS

FINAL DRAWINGS

COMPLETED BY: Amy Ibrahim

© COPYRIGHT 2003 SIMONDS IP Pty Ltd (ACN 144 839 805) (ABN 56 144 839 805) NOT TO BE REPRODUCED IN PART OR WHOLE WITHOUT EXPRESS PERMISSION.

View: SLAB PLUMBING OUTLET PLAN

Customer:

Address: LOT 31, 3 OSKAR COURT, PAKENHAM

Version 1.0

Sheet No: 5.2

Scale: 1:100@A3

Date: 18-Nov-21

House: CAYENNE 29_270-12.5A

Facade: MULBERRY

Drawn: D.H.P

Job No: 69975 ACC

Design: X00X

Mastered: T.N

Checked: X00X

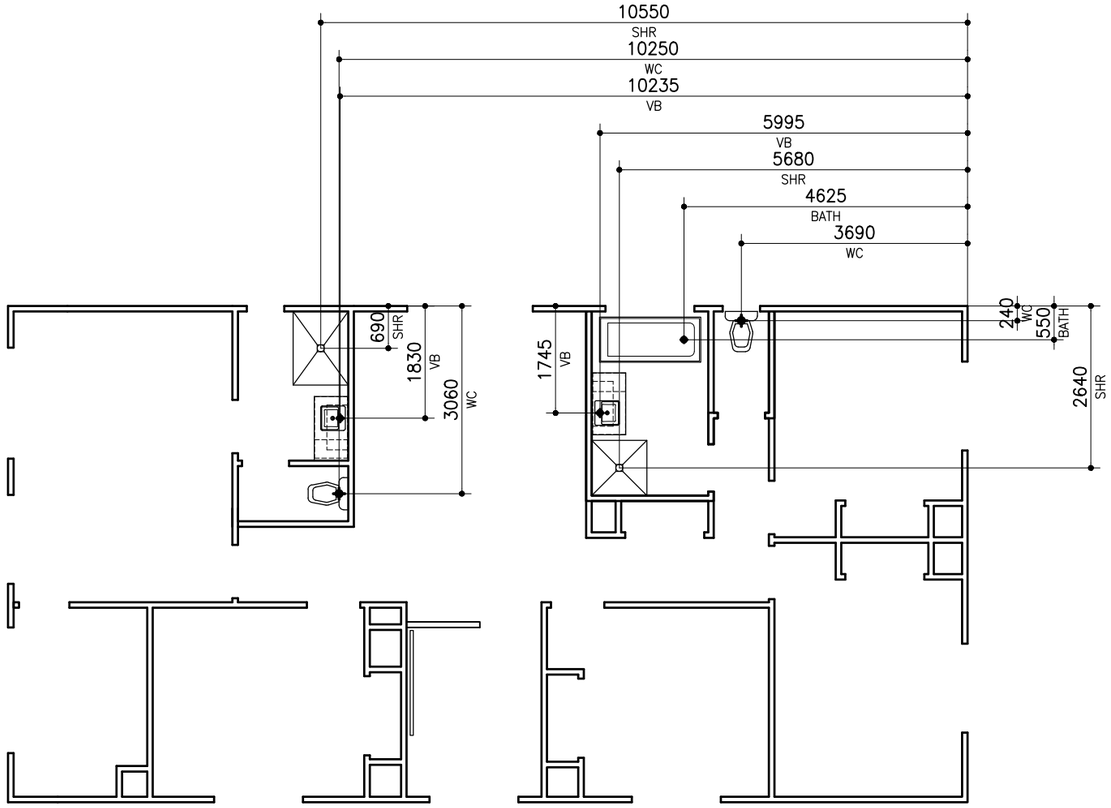

Xpress
Built by SIMONDS

SIMONDS HOMES VICTORIA P/L ACN 050 197 610
HEAD OFFICE 1ST FLOOR 570 ST KILDA ROAD, MELBOURNE VIC 3004
TELEPHONE (03) 9682 0700
E-MAIL enquiries@simonds.com.au
ENQUIRIES 1300 SIMONDS
INTERNET www.simonds.com.au

Spec: XPRESS

FINAL DRAWINGS

COMPLETED BY: Amy Ibrahim

© COPYRIGHT 2003 SIMONDS IP Pty Ltd (ACN 144 839 805) (ABN 56 144 839 805)
NOT TO BE REPRODUCED IN PART OR WHOLE WITHOUT EXPRESS PERMISSION.

View: FIRST FLOOR PLUMBING OUTLET PLAN

Customer:

Address: LOT 31, 3 OSKAR COURT, PAKENHAM

Version 1.0

Sheet No: 5.3

Scale: 1:100@A3

Date: 18-Nov-21

House: CAYENNE 29_270-12.5A

Facade: MULBERRY

Drawn: D.H.P

Job No: 69975 ACC

Design: X00X

Mastered: T.N

Checked: X00X

ALL GLASS TO CONFORM WITH AS1288-2006 : GLASS IN BUILDINGS

ALL GLASS TO CONFORM WITH AS1288-2006 : GLASS IN BUILDINGS
WINDOW SCHEDULE (Nominal Sizes) DOWELL WINDOW SCHEDULE
FOR STUD (FRAMED) OPENINGS: Window WIDTH PLUS 50mm, Window HEIGHT PLUS 60mm MIN.

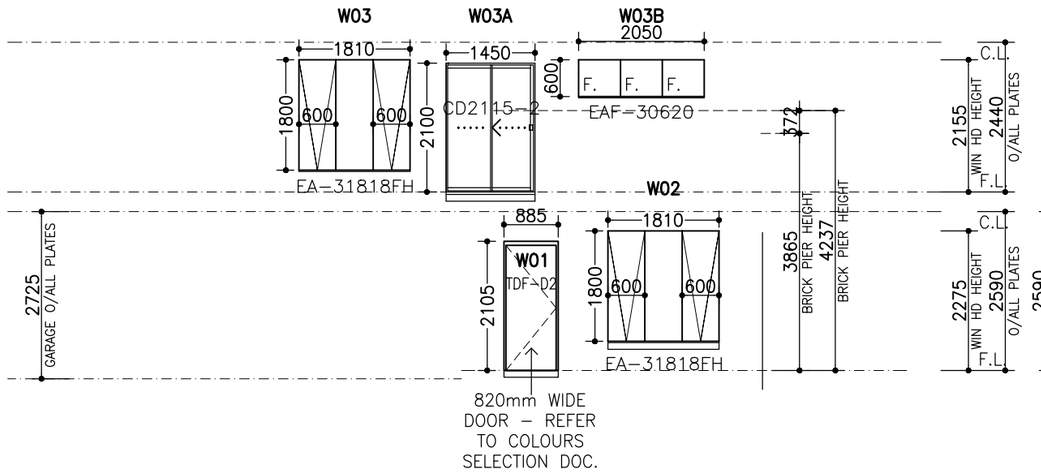

ELEVATION A

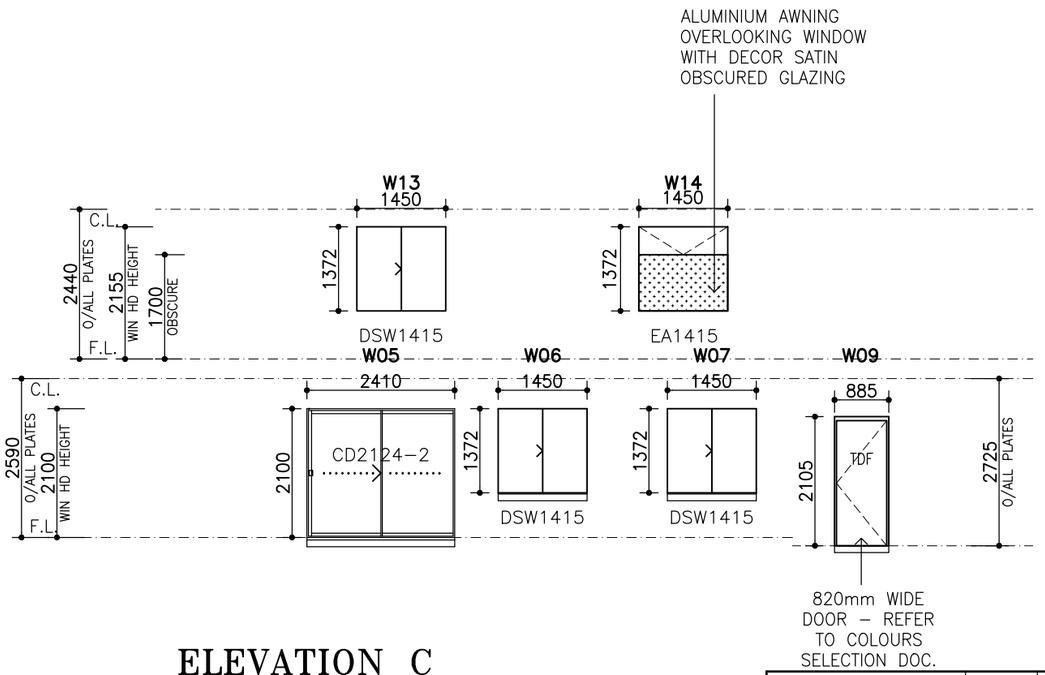

ELEVATION C

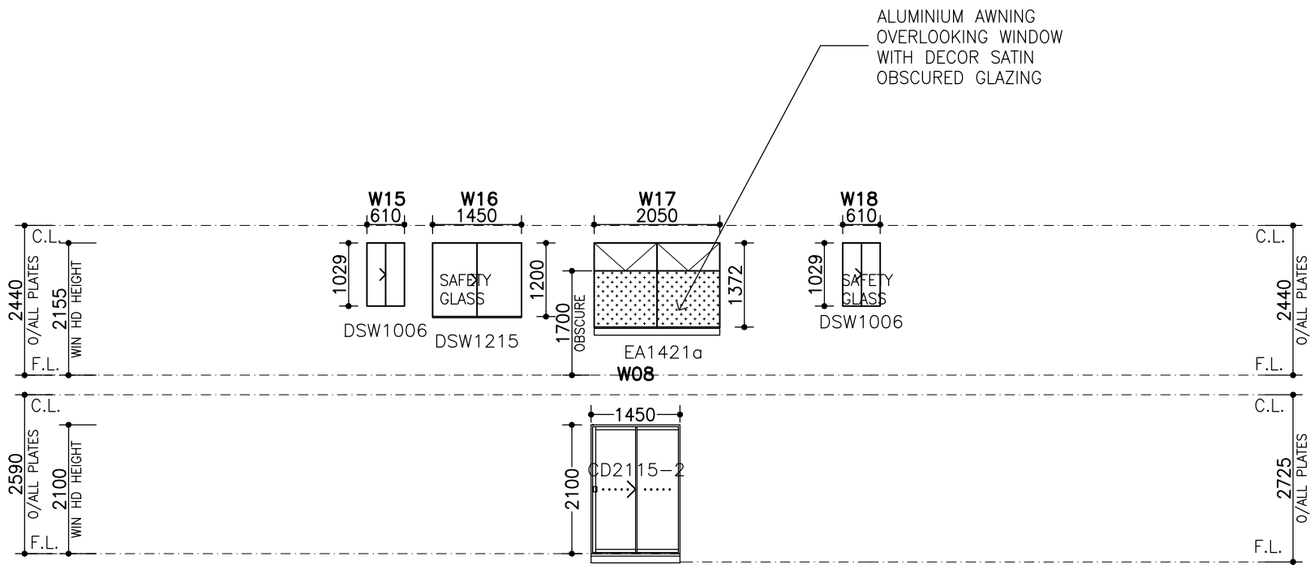

ELEVATION B

DOWELL WINDOWS & DOORS	STANDARD		LOW-E SP10		DOUBLE GLAZED		THERMA-LINE DG.	
	Uw	SHGC	Uw	SHGC	Uw	SHGC	Uw	SHGC
ALUMINIUM SLIDING WINDOWS	6.4	0.75	4.5	0.63	DEFAULT TO THERMALINE		2.9	0.64
ALUMINIUM SLIDING DOOR/STACKER	6.2	0.71	4.4	0.61	4.2	0.59	2.7	0.60
ALUMINIUM BI-FOLD DOOR	6.1	0.62	4.7	0.53	4.1	0.54	N/A	N/A
ALUMINIUM FIXED	6.2	0.75	4.3	0.64	3.6	0.66	2.6	0.63
ALUMINIUM AWNING	6.5	0.65	4.8	0.55	3.9	0.58	2.6	0.55
TIMBER AWNING	4.5	0.54	3.2	0.46	2.6	0.47	N/A	N/A
TIMBER BI-FOLD	4.1	0.52	4.1	0.52	2.6	0.45	N/A	N/A
TIMBER SLIDING	4.9	0.66	4.9	0.66	2.7	0.57	N/A	N/A

DENOTES SLIDING WINDOW

DENOTES AWNING WINDOW

DENOTES LOW-E GLAZING

DENOTES DOUBLE GLAZING

DENOTES DECOR SATIN GLAZING

DENOTES TRANSLUCENT GLAZING

NOTE: ALL WINDOWS TO BE SET AT 2100mm O/A HEAD UNLESS NOMINATED OTHERWISE/IF BRICKWORK OVER, ADJUST HEAD HEIGHT TO WITHIN 5-10mm OF LINTEL

NOTE: PROVIDE BACKFILL TO ALL EXTERNAL OPENINGS TO PROVIDE A 190mm MAX. STEP UP INTO HOUSE AS PER BCA REQUIREMENTS.

NOTE: CONTROL JOINTS TO ENGINEERS RECOMMENDATIONS

Xpress Built by SIMONDS

SIMONDS HOMES VICTORIA P/L ACN 050 197 610
HEAD OFFICE 1ST FLOOR 570 ST KILDA ROAD, MELBOURNE VIC 3004
TELEPHONE (03) 9682 0700
E-MAIL enquiries@simonds.com.au
ENQUIRIES 1300 SIMONDS
INTERNET www.simonds.com.au

Spec: XPRESS

FINAL DRAWINGS

COMPLETED BY: Amy Ibrahim

© COPYRIGHT 2003 SIMONDS IP Pty Ltd (ACN 144 839 805) (ABN 56 144 839 805) NOT TO BE REPRODUCED IN PART OR WHOLE WITHOUT EXPRESS PERMISSION.

View: WINDOW SCHEDULE 1

Customer:

Address: LOT 31, 3 OSKAR COURT, PAKENHAM

Version 1.0

Sheet No: 6.1

Scale: 1:100@A3

Date: 18-Nov-21

House: CAYENNE 29_270-12.5A

Facade: MULBERRY

Drawn: D.H.P

Job No: 69975 ACC

Design: X00X

Mastered: T.N

Checked: X00X

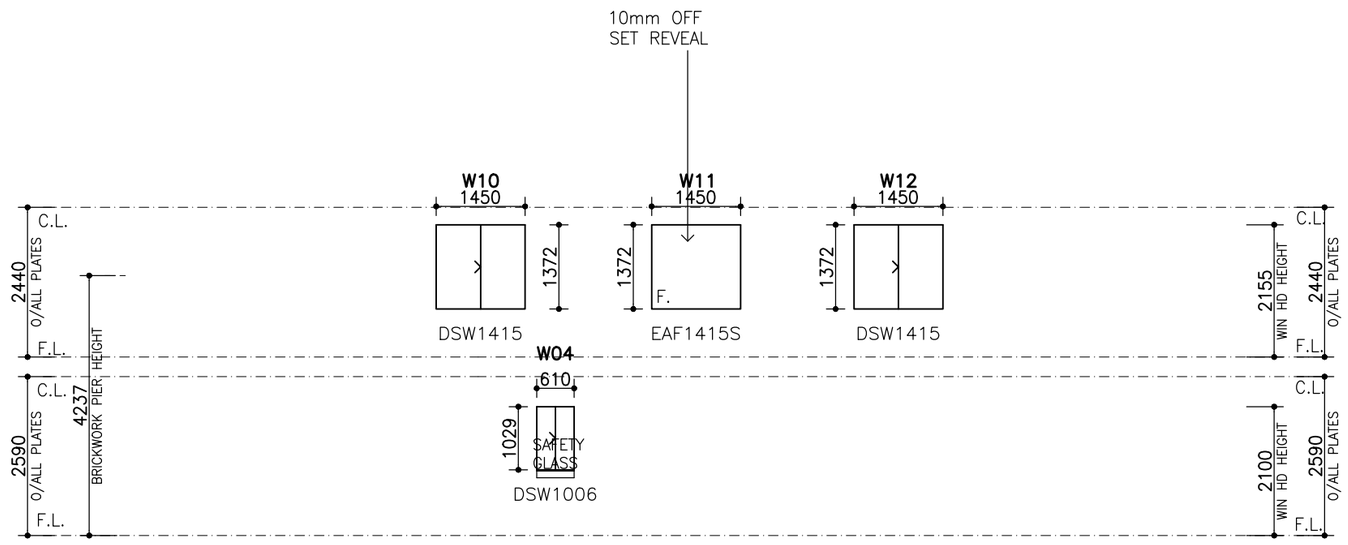

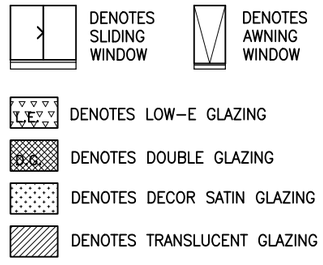

ELEVATION D

Xpress Built by SIMONDS

SIMONDS HOMES VICTORIA P/L ACN 050 197 610
HEAD OFFICE 1ST FLOOR 570 ST KILDA ROAD, MELBOURNE VIC 3004
TELEPHONE (03) 9682 0700
E-MAIL enquiries@simonds.com.au
ENQUIRIES 1300 SIMONDS
INTERNET www.simonds.com.au

Spec: XPRESS

FINAL DRAWINGS

COMPLETED BY: Amy Ibrahim

© COPYRIGHT 2003 SIMONDS IP Pty Ltd (ACN 144 839 805) (ABN 56 144 839 805)
NOT TO BE REPRODUCED IN PART OR WHOLE WITHOUT EXPRESS PERMISSION.

View: WINDOW SCHEDULE 2

Customer:

Address: LOT 31, 3 OSKAR COURT, PAKENHAM

Version 1.0

Sheet No: 6.2

Scale: 1:100@A3

Date: 18-Nov-21

House: CAYENNE 29_270-12.5A

Facade: MULBERRY

Drawn: D.H.P

Job No: 69975 ACC

Design: X00X

Mastered: T.N

Checked: X00X

SELECTED OVERLAY TIMBER FLOORING(APPROX. 65.0m2)
SELECTED CARPET
SELECTED CERAMIC FLOOR TILING

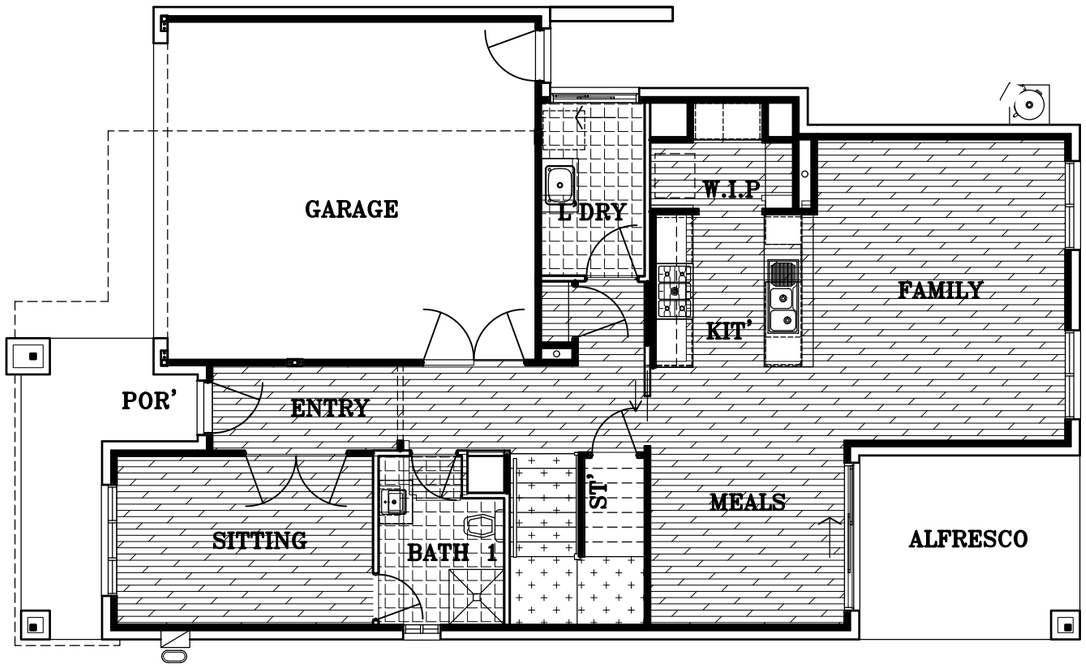

Xpress Built by SIMONDS

SIMONDS HOMES VICTORIA P/L ACN 050 197 610
HEAD OFFICE 1ST FLOOR 570 ST KILDA ROAD, MELBOURNE VIC 3004
TELEPHONE (03) 9682 0700
E-MAIL enquiries@simonds.com.au
ENQUIRIES 1300 SIMONDS
INTERNET www.simonds.com.au

Spec: XPRESS

FINAL DRAWINGS

COMPLETED BY: Amy Ibrahim

© COPYRIGHT 2003 SIMONDS IP Pty Ltd (ACN 144 839 805) (ABN 56 144 839 805) NOT TO BE REPRODUCED IN PART OR WHOLE WITHOUT EXPRESS PERMISSION.

View: GROUND FLOOR COVERINGS PLAN

Customer:

Address: LOT 31, 3 OSKAR COURT, PAKENHAM

Version 1.0

Sheet No: 7.2

Scale: 1:100@A3

Date: 18-Nov-21

House: CAYENNE 29_270-12.5A

Facade: MULBERRY

Drawn: D.H.P

Job No: 69975 ACC

Design: X00X

Mastered: T.N

Checked: X00X

SELECTED OVERLAY TIMBER FLOORING(APPROX. 51M2)
SELECTED CARPET 51+15M2 INCLUDED STAIR)
SELECTED CERAMIC FLOOR TILING

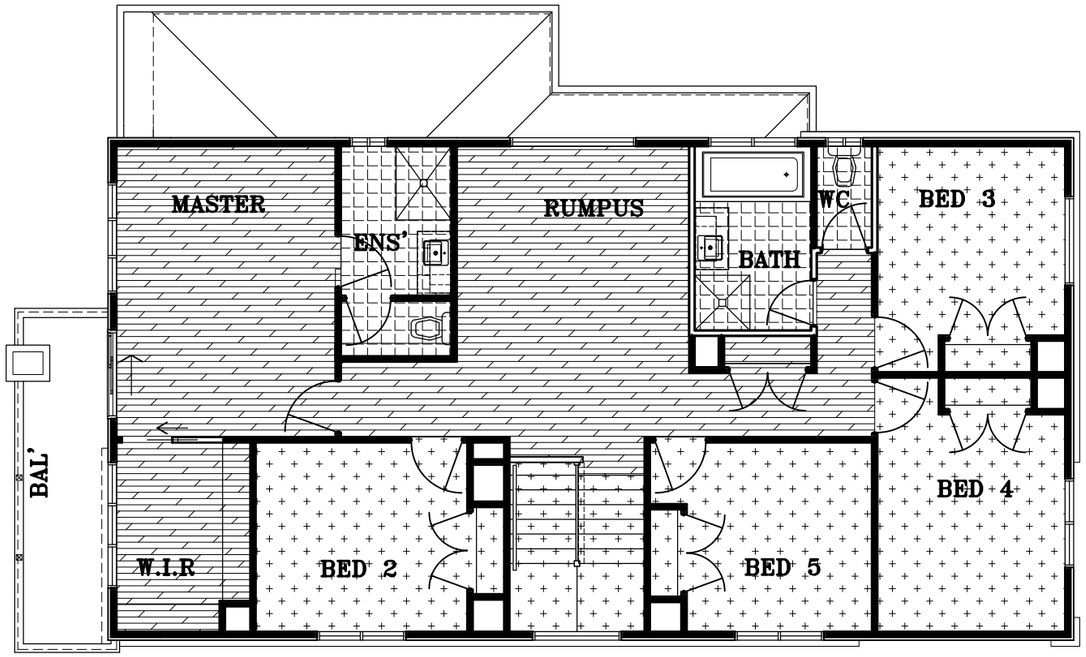

Xpress Built by SIMONDS

SIMONDS HOMES VICTORIA P/L ACN 050 197 610
HEAD OFFICE 1ST FLOOR 570 ST KILDA ROAD, MELBOURNE VIC 3004
TELEPHONE (03) 9682 0700
E-MAIL enquiries@simonds.com.au
ENQUIRIES 1300 SIMONDS
INTERNET www.simonds.com.au

Spec: XPRESS

FINAL DRAWINGS

COMPLETED BY: Amy Ibrahim

© COPYRIGHT 2003 SIMONDS IP Pty Ltd (ACN 144 839 805) (ABN 56 144 839 805) NOT TO BE REPRODUCED IN PART OR WHOLE WITHOUT EXPRESS PERMISSION.

View: FIRST FLOOR COVERINGS PLAN

Customer:

Address: LOT 31, 3 OSKAR COURT, PAKENHAM

Version 1.0

Sheet No: 7.3

Scale: 1:100@A3

Date: 18-Nov-21

House: CAYENNE 29_270-12.5A

Facade: MULBERRY

Drawn: D.H.P

Job No: 69975 ACC

Design: X00X

Mastered: T.N

Checked: X00X

WALL RUN N/A
ISLAND RUN 5

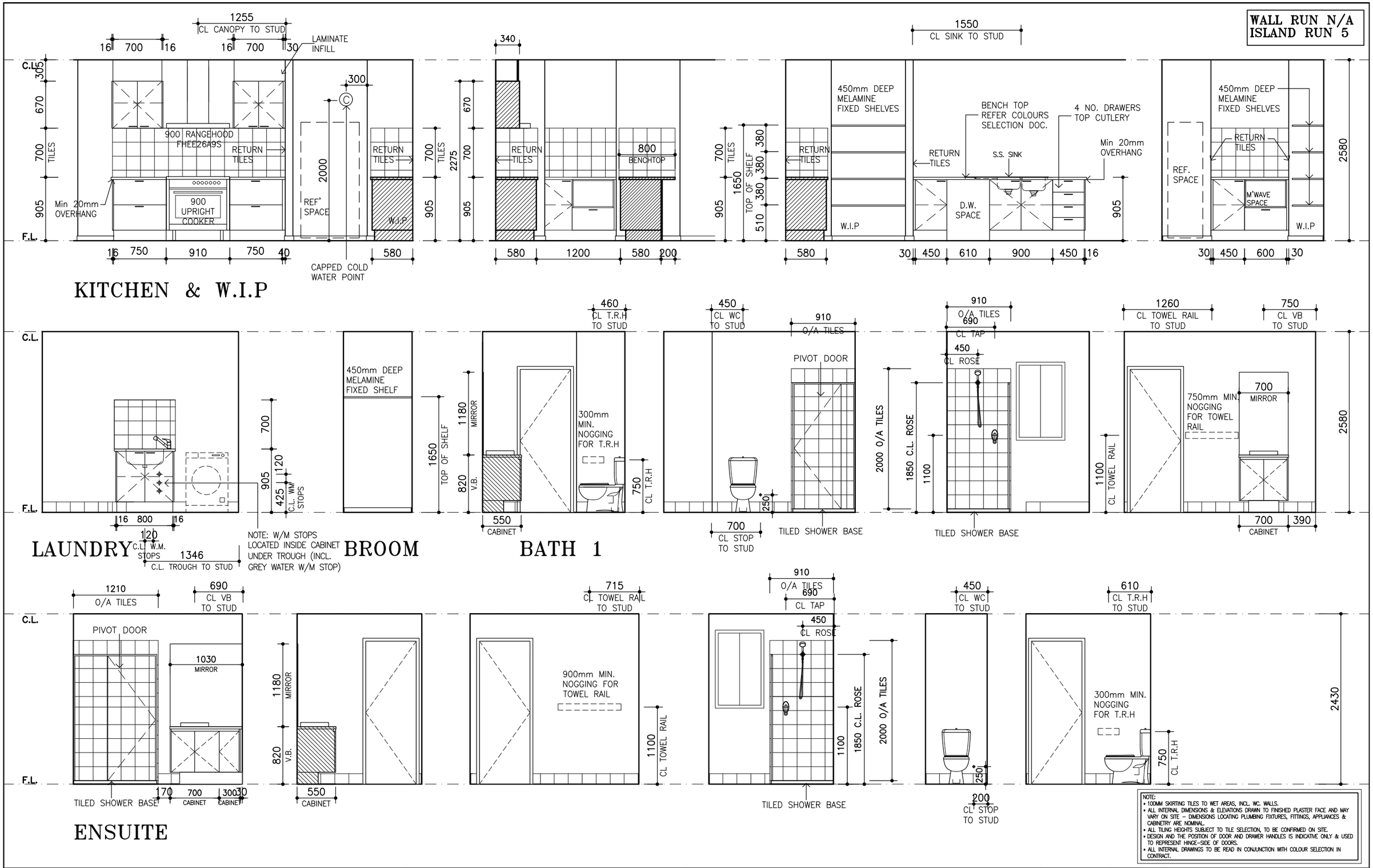

NOTE:
- 100MM SKIRTING TILES TO WET AREAS, INCL. WC. WALLS.
- ALL INTERNAL DIMENSIONS & ELEVATIONS DRAWN TO FINISHED PLASTER FACE AND MAY VARY ON SITE – DIMENSIONS LOCATING PLUMBING FIXTURES, FITTINGS, APPLIANCES & CABINETRY ARE NOMINAL.
- ALL TILING HEIGHTS SUBJECT TO TILE SELECTION, TO BE CONFIRMED ON SITE.
- DESIGN AND THE POSITION OF DOOR AND DRAWER HANDLES IS INDICATIVE ONLY & USED TO REPRESENT HINGE-SIDE OF DOORS.
- ALL INTERNAL DRAWINGS TO BE READ IN CONJUNCTION WITH COLOUR SELECTION IN CONTRACT.

Xpress Built by SIMONDS

SIMONDS HOMES VICTORIA P/L ACN 050 197 610
HEAD OFFICE 1ST FLOOR 570 ST KILDA ROAD, MELBOURNE VIC 3004
TELEPHONE (03) 9682 0700
E-MAIL enquiries@simonds.com.au
ENQUIRIES 1300 SIMONDS
INTERNET www.simonds.com.au

Spec: XPRESS

FINAL DRAWINGS

COMPLETED BY: Amy Ibrahim

© COPYRIGHT 2003 SIMONDS IP Pty Ltd (ACN 144 839 805) (ABN 56 144 839 805) NOT TO BE REPRODUCED IN PART OR WHOLE WITHOUT EXPRESS PERMISSION.

View: INTERNAL ELEVATIONS 1

Customer:

Address: LOT 31, 3 OSKAR COURT, PAKENHAM

Version 1.0

Sheet No: 8.1

Scale: 1:50@A3

Date: 18-Nov-21

House: CAYENNE 29_270-12.5A

Facade: MULBERRY

Drawn: D.H.P

Job No: 69975 ACC

Design: X00X

Mastered: T.N

Checked: X00X

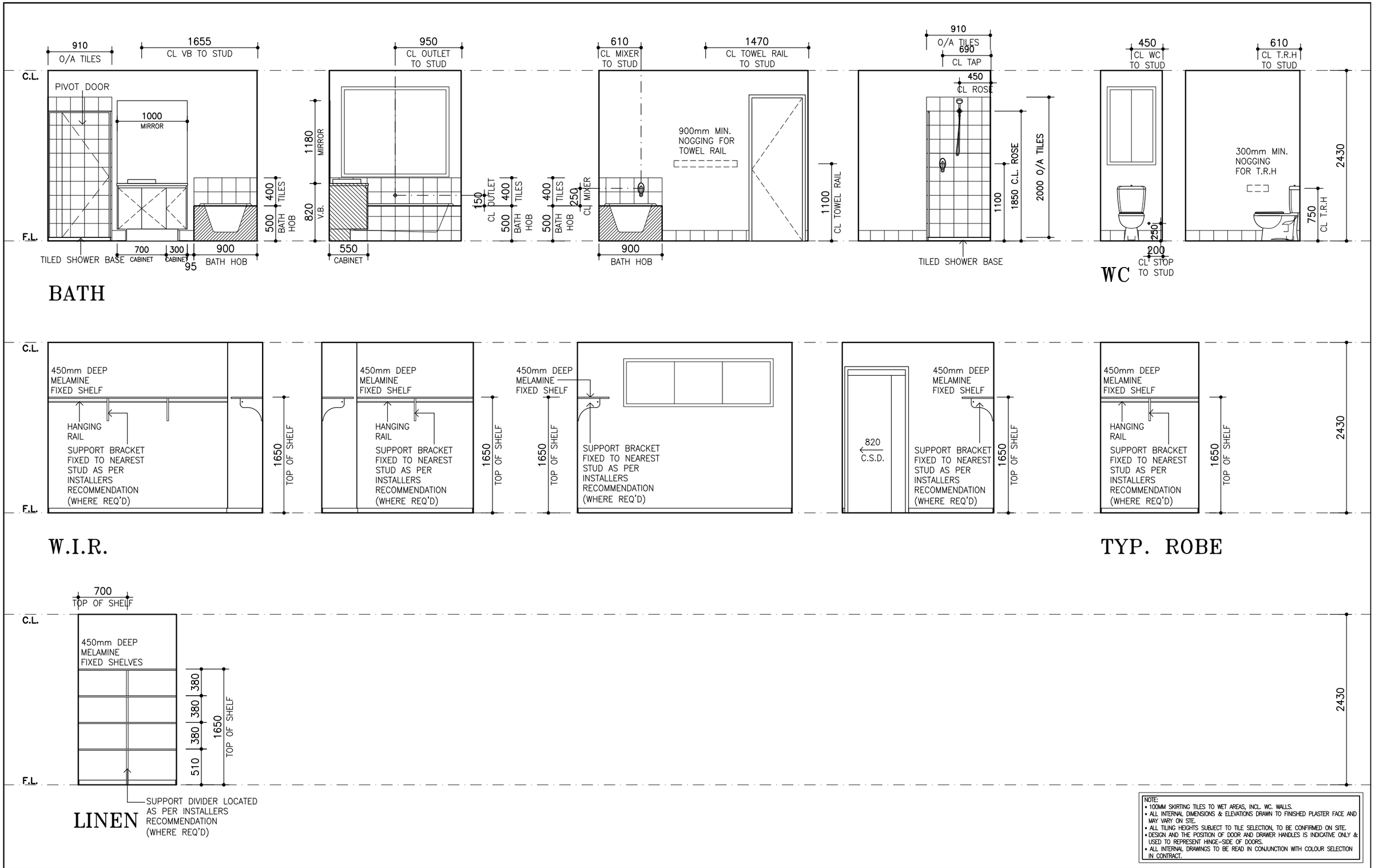

NOTE:
- 100MM SKIRTING TILES TO WET AREAS, INCL. WC. WALLS.
- ALL INTERNAL DIMENSIONS & ELEVATIONS DRAWN TO FINISHED PLASTER FACE AND MAY VARY ON STE.
- ALL TILING HEIGHTS SUBJECT TO TILE SELECTION, TO BE CONFIRMED ON SITE.
- DESIGN AND THE POSITION OF DOOR AND DRAWER HANDLES IS INDICATIVE ONLY & USED TO REPRESENT HINGE-SIDE OF DOORS.
- ALL INTERNAL DRAWINGS TO BE READ IN CONJUNCTION WITH COLOUR SELECTION IN CONTRACT.

Xpress Built by SIMONDS

SIMONDS HOMES VICTORIA P/L ACN 050 197 610
HEAD OFFICE 1ST FLOOR 570 ST KILDA ROAD, MELBOURNE VIC 3004
TELEPHONE (03) 9682 0700
E-MAIL enquiries@simonds.com.au
ENQUIRIES 1300 SIMONDS
INTERNET www.simonds.com.au

Spec: XPRESS

FINAL DRAWINGS

COMPLETED BY: Amy Ibrahim

© COPYRIGHT 2003 SIMONDS IP Pty Ltd (ACN 144 839 805) (ABN 56 144 839 805) NOT TO BE REPRODUCED IN PART OR WHOLE WITHOUT EXPRESS PERMISSION.

View: INTERNAL ELEVATIONS 2

Customer:

Address: LOT 31, 3 OSKAR COURT, PAKENHAM

Version 1.0

Sheet No: 8.2

Scale: 1:50@A3

Date: 18-Nov-21

House: CAYENNE 29_270-12.5A

Facade: MULBERRY

Drawn: D.H.P

Job No: 69975 ACC

Design: X00X

Mastered: T.N

Checked: X00X

STAIRS TO BE SUPPLIED AND INSTALLED IN COMPLIANCE WITH REGULATIONS

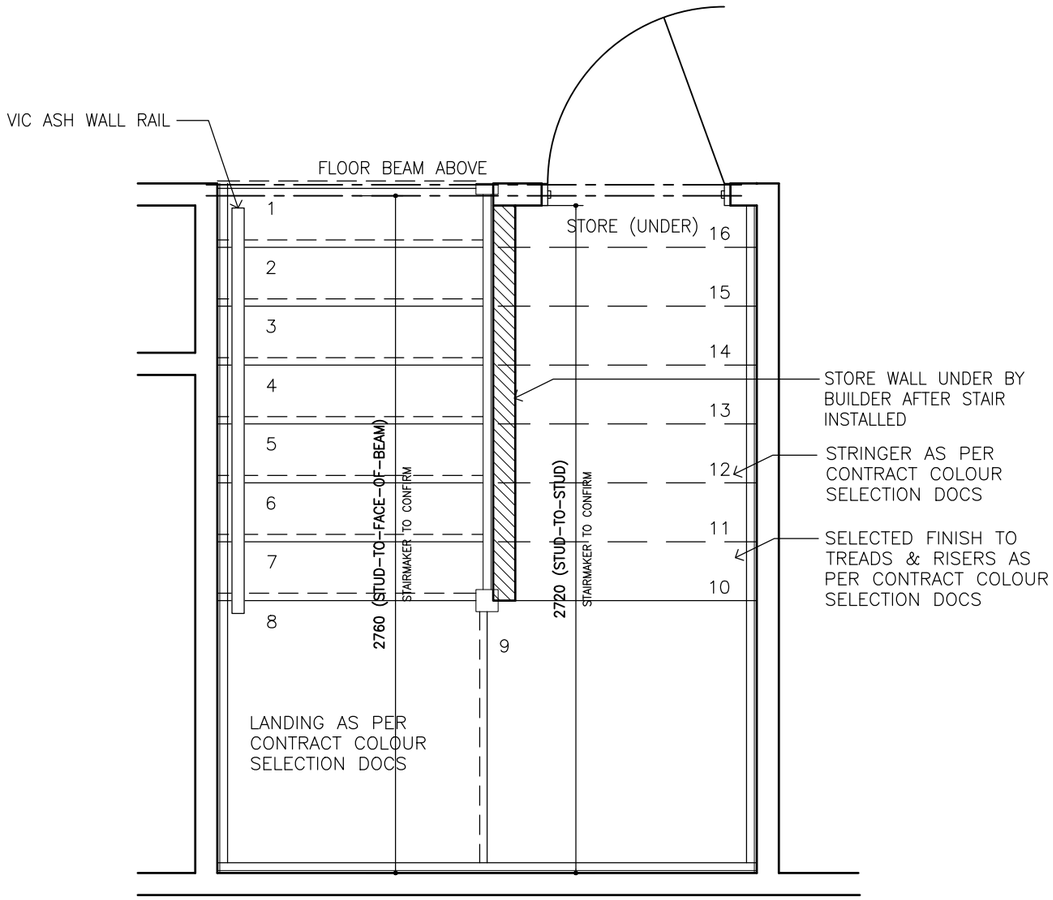

STAIR: GROUND FLOOR PLAN

SCALE 1:25

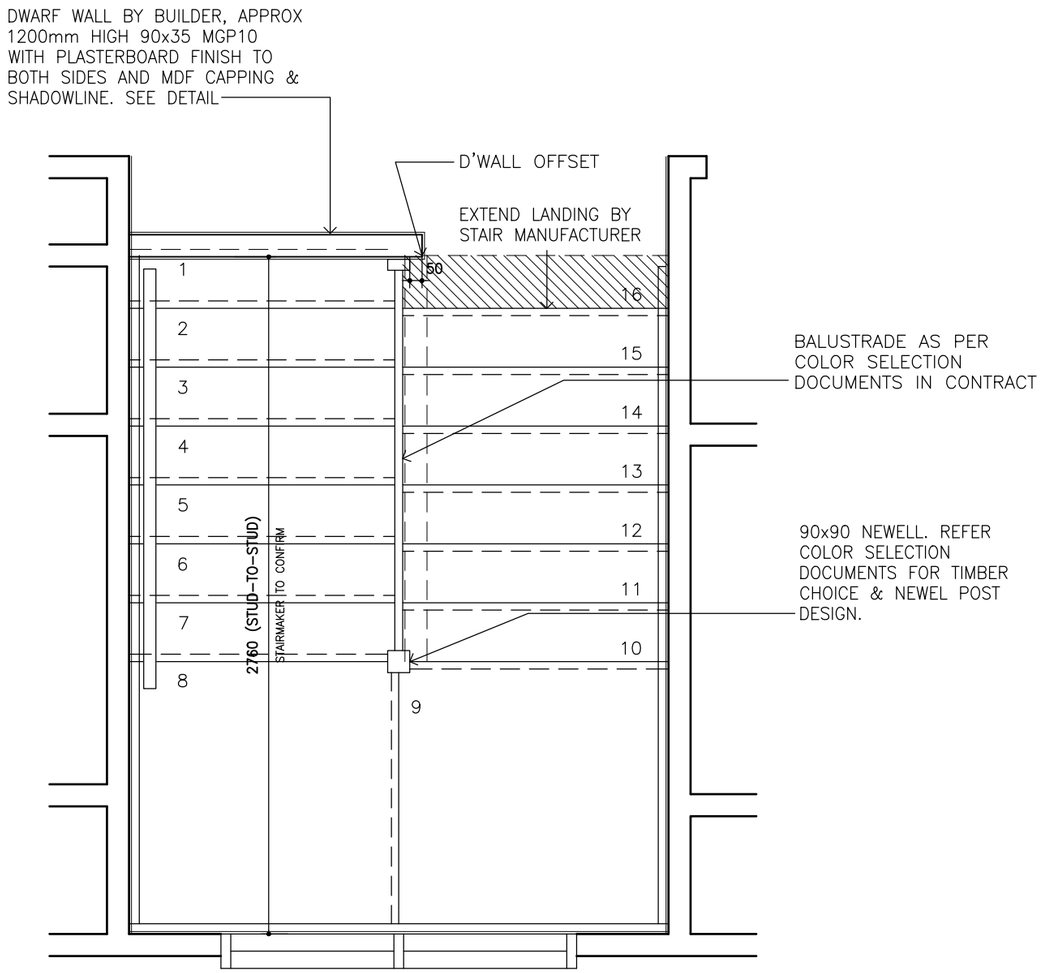

STAIR: FIRST FLOOR PLAN

SCALE 1:25

STAIR: 16 UP – 300 FLOOR JOISTS

Xpress Built by SIMONDS

SIMONDS HOMES VICTORIA P/L ACN 050 197 610
HEAD OFFICE 1ST FLOOR 570 ST KILDA ROAD, MELBOURNE VIC 3004
TELEPHONE (03) 9682 0700
E-MAIL enquiries@simonds.com.au
ENQUIRIES 1300 SIMONDS
INTERNET www.simonds.com.au

Spec: XPRESS

FINAL DRAWINGS

COMPLETED BY: Amy Ibrahim

© COPYRIGHT 2003 SIMONDS IP Pty Ltd (ACN 144 839 805) (ABN 56 144 839 805) NOT TO BE REPRODUCED IN PART OR WHOLE WITHOUT EXPRESS PERMISSION.

View: STAIR FLOOR PLAN

Customer:

Address: LOT 31, 3 OSKAR COURT, PAKENHAM

Version 1.0

Sheet No: 9.0.1

Scale: 1:25@A3

Date: 18-Nov-21

House: CAYENNE 29_270-12.5A

Facade: MULBERRY

Drawn: D.H.P

Job No: 69975 ACC

Design: X00X

Mastered: T.N

Checked: X00X

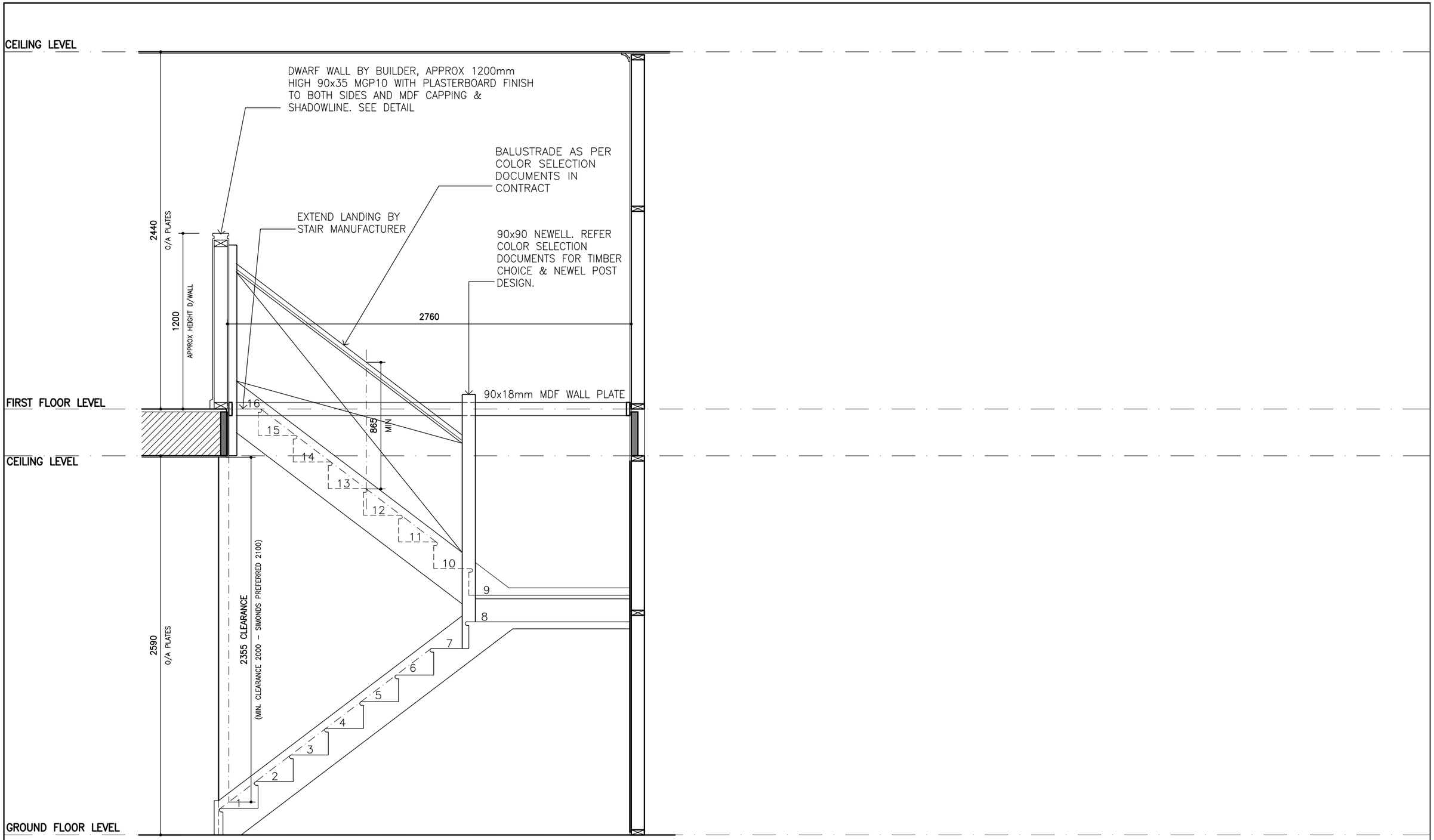

SECTION–1

SCALE 1:25

STAIR: 16 UP – 300 FLOOR JOISTS

Xpress Built by SIMONDS

SIMONDS HOMES VICTORIA P/L ACN 050 197 610
HEAD OFFICE 1ST FLOOR 570 ST KILDA ROAD, MELBOURNE VIC 3004
TELEPHONE (03) 9682 0700
E-MAIL enquiries@simonds.com.au
ENQUIRIES 1300 SIMONDS
INTERNET www.simonds.com.au

Spec: XPRESS

FINAL DRAWINGS

COMPLETED BY: Amy Ibrahim

© COPYRIGHT 2003 SIMONDS IP Pty Ltd (ACN 144 839 805) (ABN 56 144 839 805) NOT TO BE REPRODUCED IN PART OR WHOLE WITHOUT EXPRESS PERMISSION.

View: SECTION–1

Customer:

Address: LOT 31, 3 OSKAR COURT, PAKENHAM

Version 1.0

Sheet No: 9.0.2

Scale: 1:25@A3

Date: 18-Nov-21

House: CAYENNE 29_270–12.5A

Facade: MULBERRY

Drawn: D.H.P

Job No: 69975 ACC

Design: X00X

Mastered: T.N

Checked: X00X

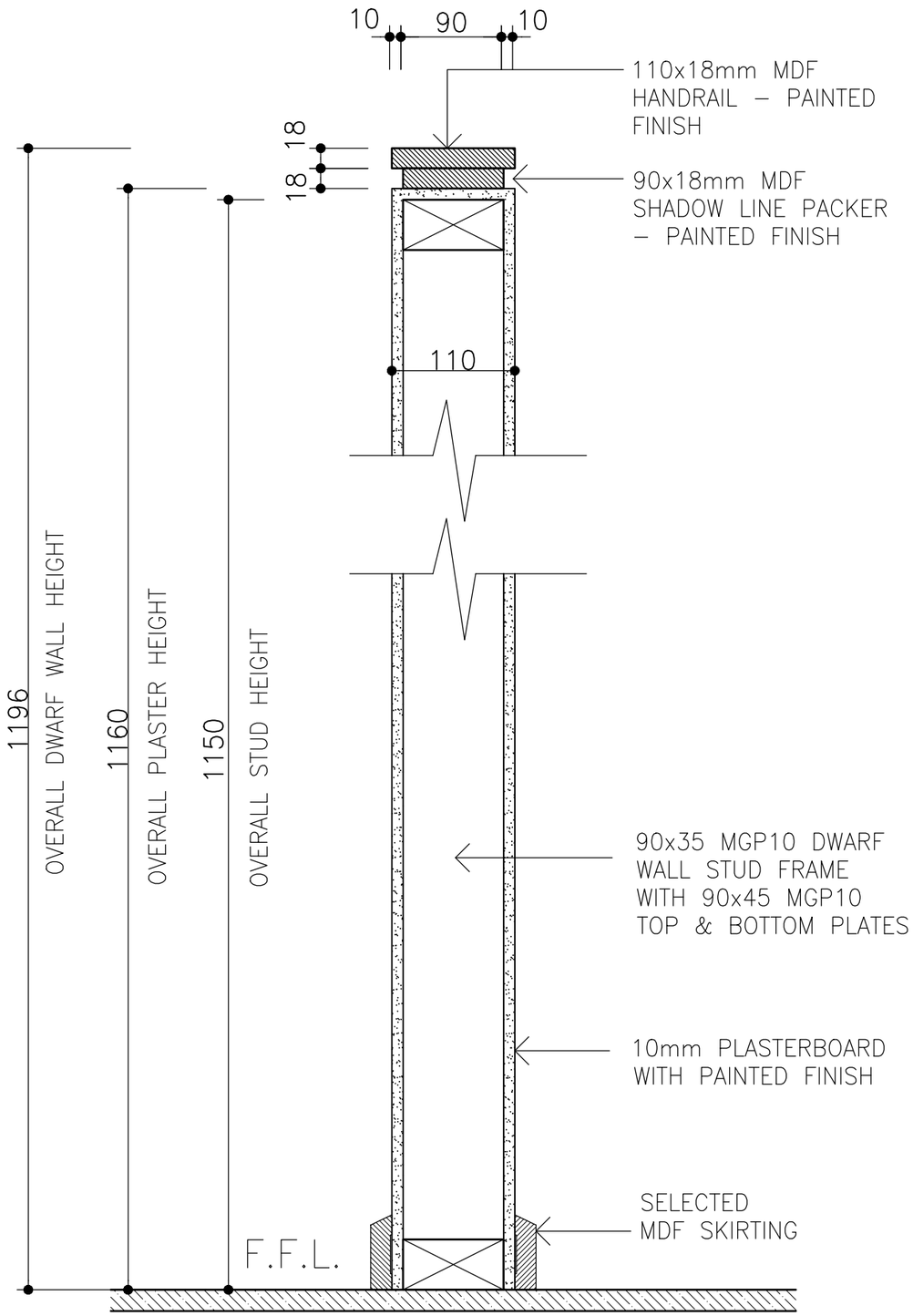

DWARF WALL DETAIL

SCALE 1:5

Xpress Built by SIMONDS

SIMONDS HOMES VICTORIA P/L ACN 050 197 610
HEAD OFFICE 1ST FLOOR 570 ST KILDA ROAD, MELBOURNE VIC 3004
TELEPHONE (03) 9682 0700
E-MAIL enquiries@simonds.com.au
ENQUIRIES 1300 SIMONDS
INTERNET www.simonds.com.au

Spec: XPRESS

FINAL DRAWINGS

COMPLETED BY: Amy Ibrahim

© COPYRIGHT 2003 SIMONDS IP Pty Ltd (ACN 144 839 805) (ABN 56 144 839 805) NOT TO BE REPRODUCED IN PART OR WHOLE WITHOUT EXPRESS PERMISSION.

View: DWARF WALL DETAIL

Customer:

Address: LOT 31, 3 OSKAR COURT, PAKENHAM

Version 1.0

Sheet No: 9.0.3

Scale: 1:5@A3

Date: 18-Nov-21

House: CAYENNE 29_270-12.5A

Facade: MULBERRY

Drawn: D.H.P

Job No: 69975 ACC

Design: X00X

Mastered: T.N

Checked: X00X

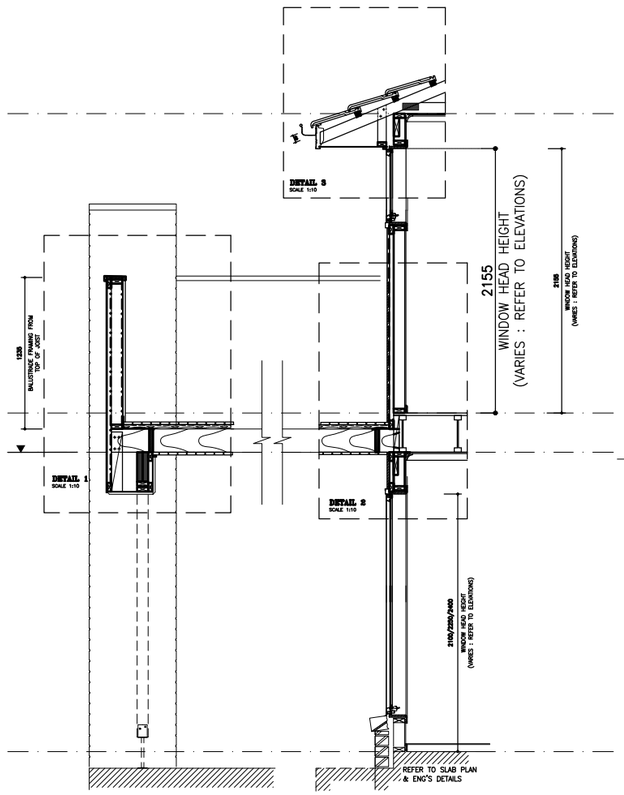

SECTION A
THROUGH FRONT WINDOW & BALCONY
SCALE 1:20

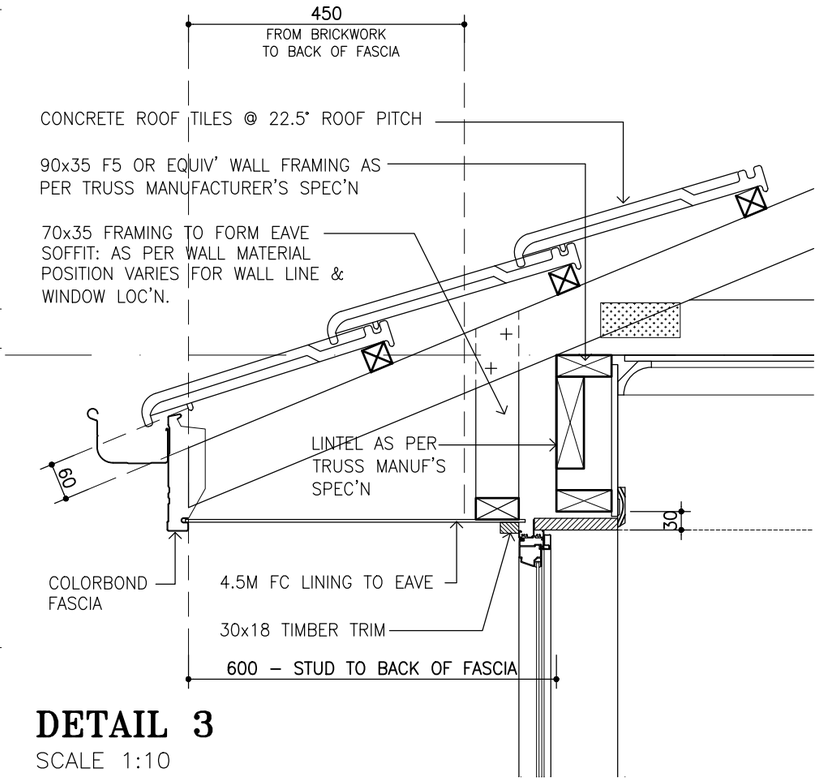

DETAIL 3
SCALE 1:10

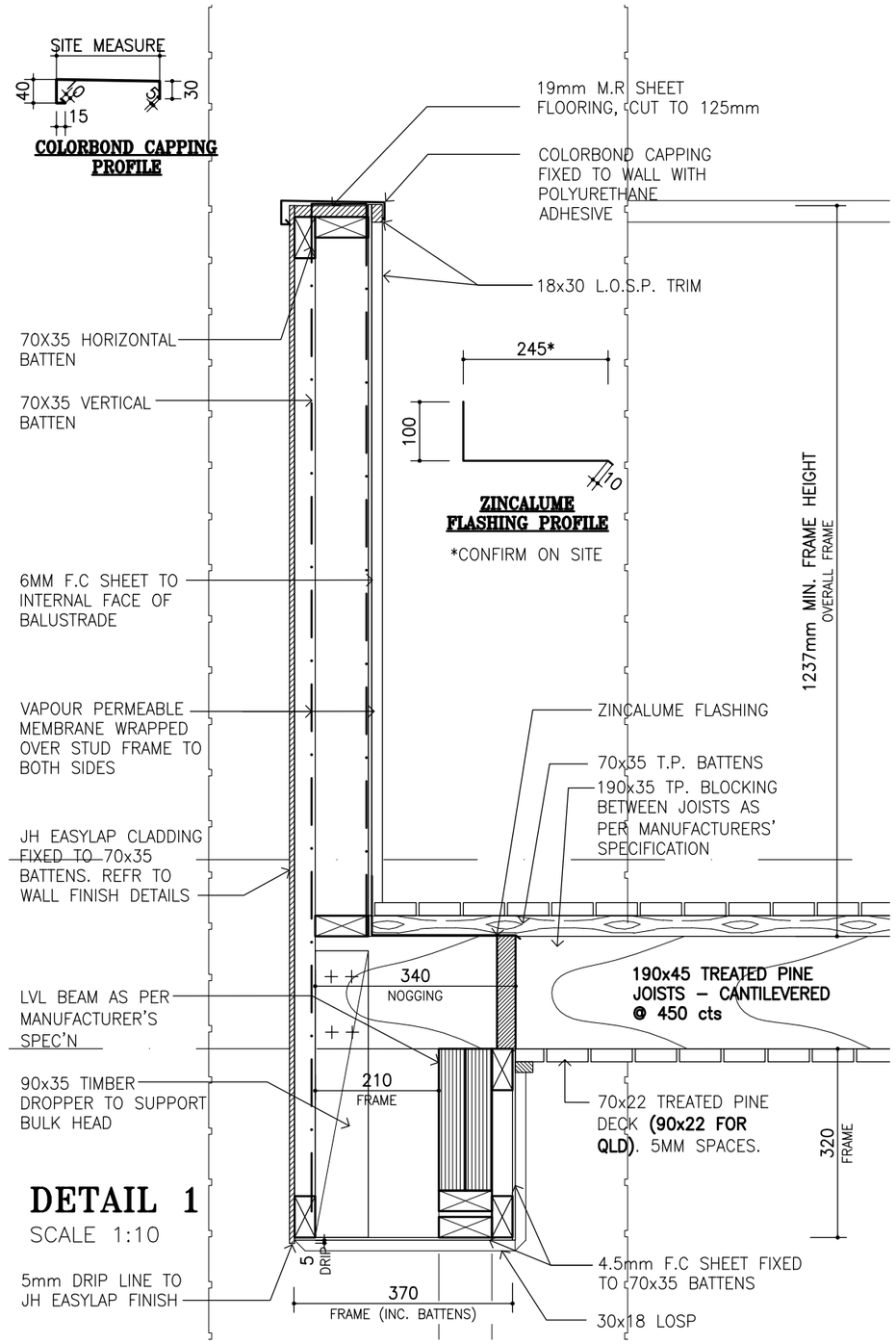

DETAIL 1
SCALE 1:10

Xpress Built by SIMONDS

SIMONDS HOMES VICTORIA P/L ACN 050 197 610
HEAD OFFICE 1ST FLOOR 570 ST KILDA ROAD, MELBOURNE VIC 3004
TELEPHONE (03) 9682 0700
E-MAIL enquiries@simonds.com.au
ENQUIRIES 1300 SIMONDS
INTERNET www.simonds.com.au

Spec: XPRESS

FINAL DRAWINGS

COMPLETED BY: Amy Ibrahim

© COPYRIGHT 2003 SIMONDS IP Pty Ltd (ACN 144 839 805) (ABN 56 144 839 805) NOT TO BE REPRODUCED IN PART OR WHOLE WITHOUT EXPRESS PERMISSION.

View: FACADE DETAIL 1

Customer:

Address: LOT 31, 3 OSKAR COURT, PAKENHAM

Version 1.0

Sheet No: 9.1

Scale: 1:50@A3

Date: 18-Nov-21

House: CAYENNE 29_270–12.5A

Facade: MULBERRY

Drawn: D.H.P

Job No: 69975 ACC

Design: X00X

Mastered: T.N

Checked: X00X

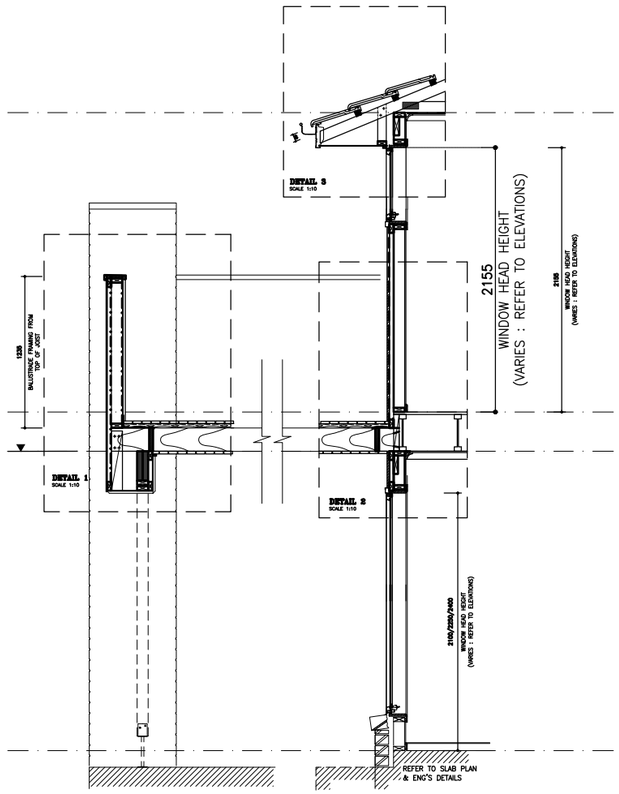

SECTION A
THROUGH FRONT WINDOW & BALCONY
SCALE 1:20

ZINCALUME
FLASHING PROFILE
TYPE: DECK 2

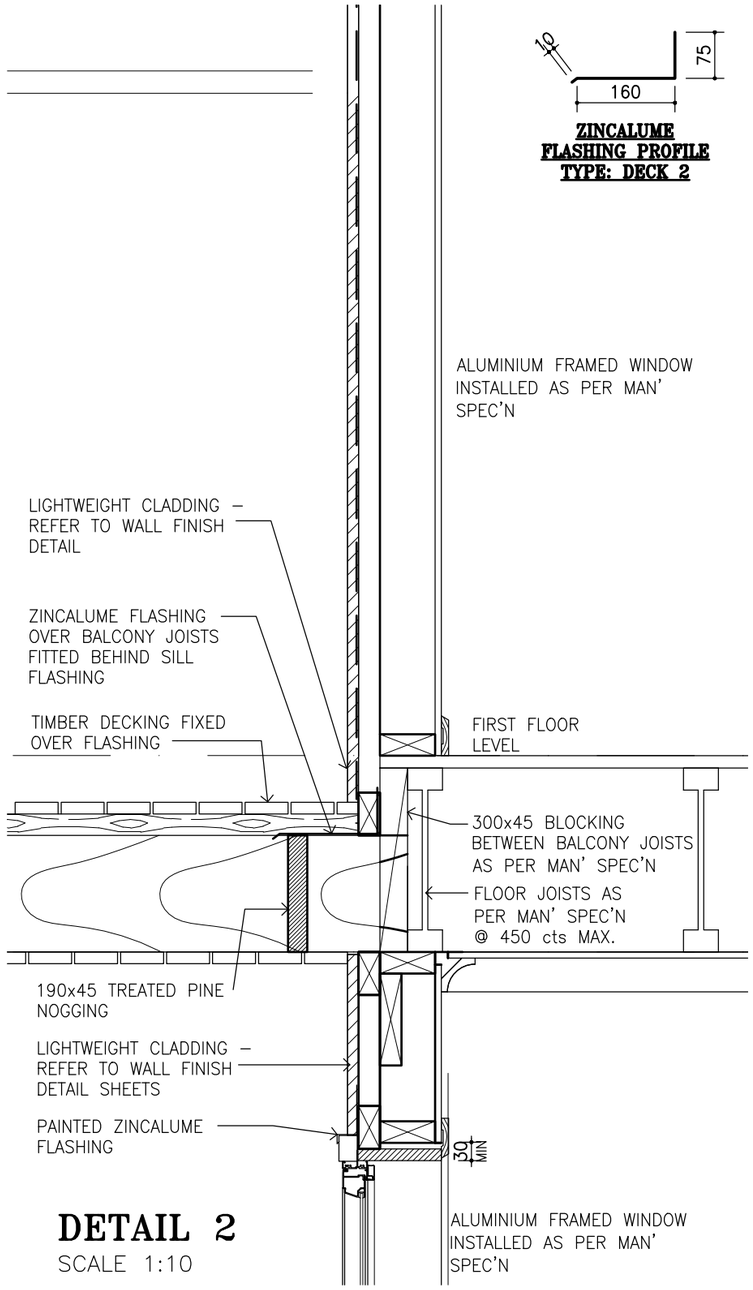

DETAIL 2
SCALE 1:10

Xpress
Built by SIMONDS

SIMONDS HOMES VICTORIA P/L ACN 050 197 610
HEAD OFFICE 1ST FLOOR 570 ST KILDA ROAD, MELBOURNE VIC 3004
TELEPHONE (03) 9682 0700
E-MAIL enquiries@simonds.com.au
ENQUIRIES 1300 SIMONDS
INTERNET www.simonds.com.au

Spec: XPRESS

FINAL DRAWINGS

COMPLETED BY: Amy Ibrahim

© COPYRIGHT 2003 SIMONDS IP Pty Ltd (ACN 144 839 805) (ABN 56 144 839 805)
NOT TO BE REPRODUCED IN PART OR WHOLE WITHOUT EXPRESS PERMISSION.

View: FACADE DETAIL 1

Customer:

Address: LOT 31, 3 OSKAR COURT, PAKENHAM

Version 1.0

Sheet No: 9.1A

Scale: 1:50@A3

Date: 18-Nov-21

House: CAYENNE 29_270–12.5A

Facade: MULBERRY

Drawn: D.H.P

Job No: 69975 ACC

Design: X00X

Mastered: T.N

Checked: X00X

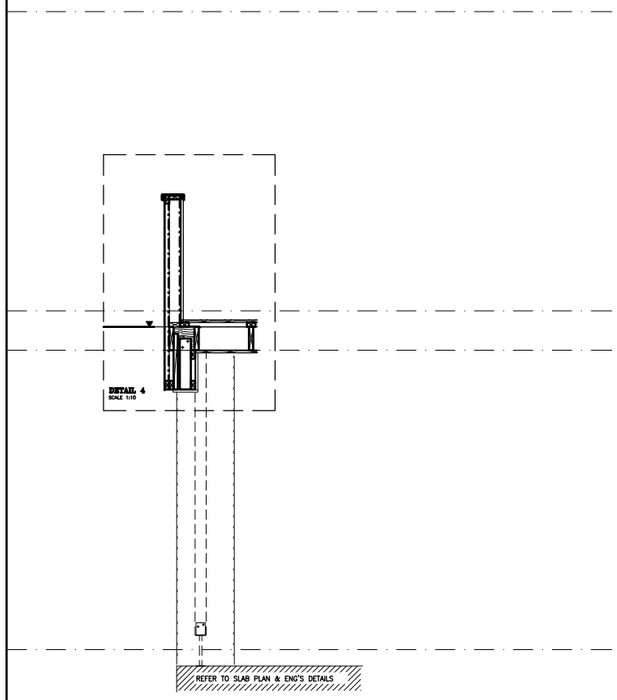

SECTION B
RETURN BALCONY – TOWARDS FRONT
SCALE 1:20

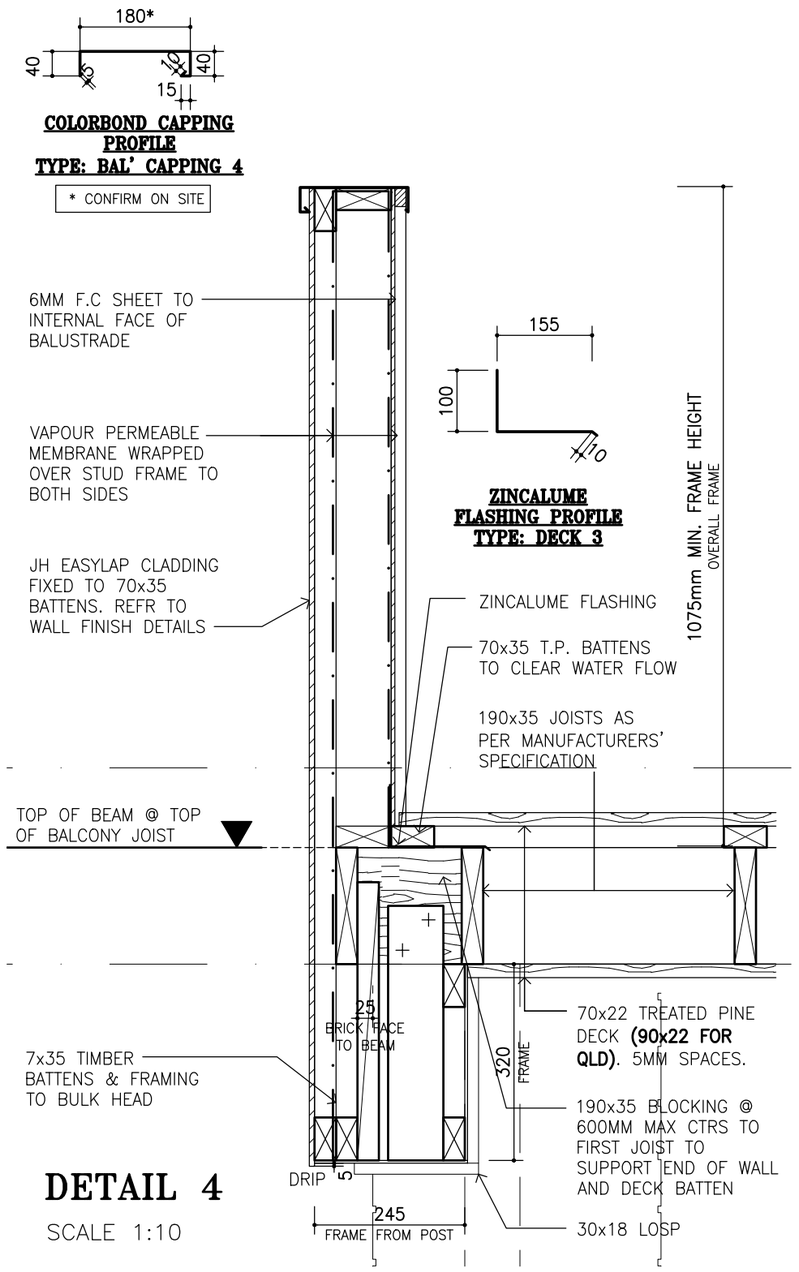

DETAIL 4
SCALE 1:10

Xpress Built by SIMONDS

SIMONDS HOMES VICTORIA P/L ACN 050 197 610
HEAD OFFICE 1ST FLOOR 570 ST KILDA ROAD, MELBOURNE VIC 3004
TELEPHONE (03) 9682 0700
E-MAIL enquiries@simonds.com.au
ENQUIRIES 1300 SIMONDS
INTERNET www.simonds.com.au

Spec: XPRESS

FINAL DRAWINGS

COMPLETED BY: Amy Ibrahim

© COPYRIGHT 2003 SIMONDS IP Pty Ltd (ACN 144 839 805) (ABN 56 144 839 805)
NOT TO BE REPRODUCED IN PART OR WHOLE WITHOUT EXPRESS PERMISSION.

View: FACADE DETAIL 2

Customer:

Address: LOT 31, 3 OSKAR COURT, PAKENHAM

Version 1.0

Sheet No: 9.2

Scale: 1:50@A3

Date: 18-Nov-21

House: CAYENNE 29_270–12.5A

Facade: MULBERRY

Drawn: D.H.P

Job No: 69975 ACC

Design: X00X

Mastered: T.N

Checked: X00X

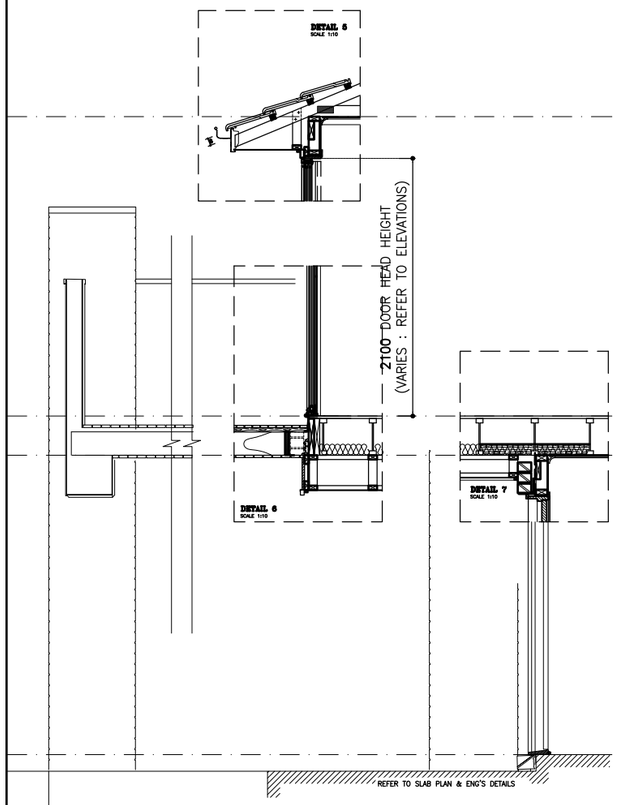

SECTION C
THROUGH ENTRY DOOR/PORCH
SCALE 1:50

DETAIL 5

SCALE 1:10

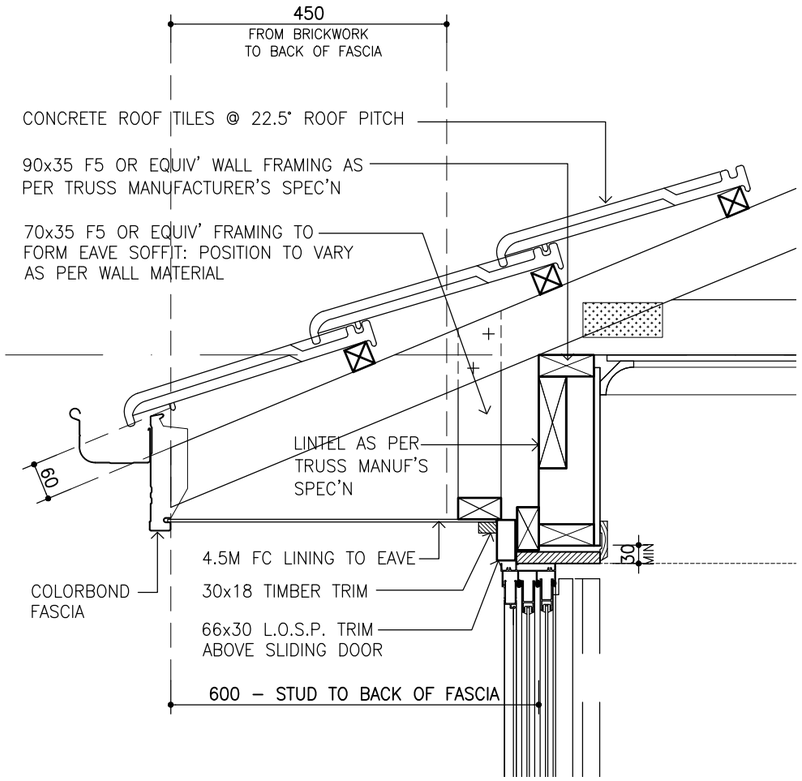

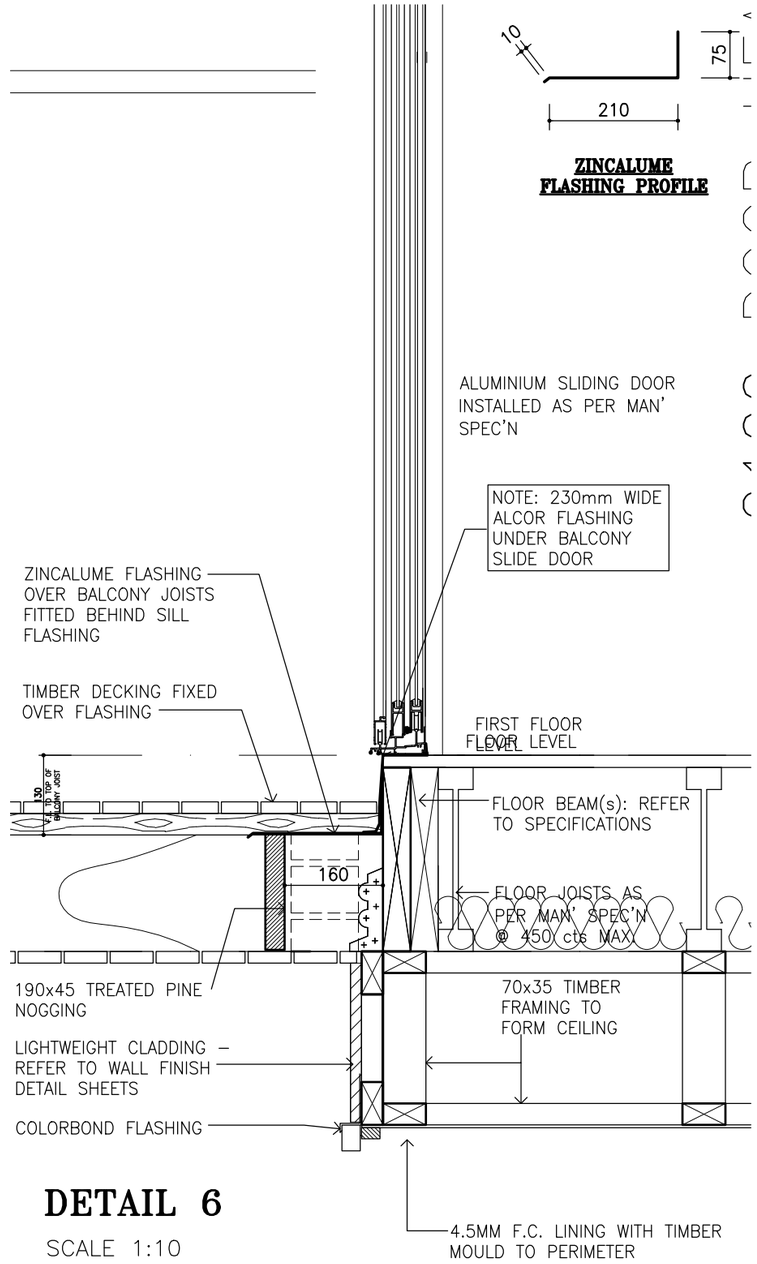

DETAIL 6

SCALE 1:10

Xpress Built by SIMONDS

SIMONDS HOMES VICTORIA P/L ACN 050 197 610
HEAD OFFICE 1ST FLOOR 570 ST KILDA ROAD, MELBOURNE VIC 3004
TELEPHONE (03) 9682 0700
E-MAIL enquiries@simonds.com.au
ENQUIRIES 1300 SIMONDS
INTERNET www.simonds.com.au

Spec: XPRESS

FINAL DRAWINGS

COMPLETED BY: Amy Ibrahim

© COPYRIGHT 2003 SIMONDS IP Pty Ltd (ACN 144 839 805) (ABN 56 144 839 805)
NOT TO BE REPRODUCED IN PART OR WHOLE WITHOUT EXPRESS PERMISSION.

View: FACADE DETAIL 3

Customer:

Address: LOT 31, 3 OSKAR COURT, PAKENHAM

Version 1.0

Sheet No: 9.3

Scale: 1:50@A3

Date: 18-Nov-21

House: CAYENNE 29_270–12.5A

Facade: MULBERRY

Drawn: D.H.P

Job No: 69975 ACC

Design: X00X

Mastered: T.N

Checked: X00X

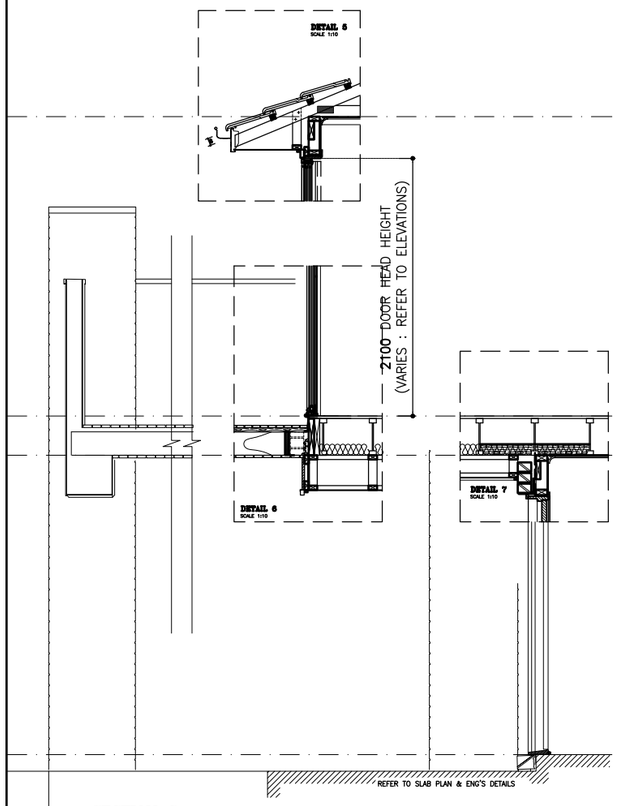

SECTION C
THROUGH ENTRY DOOR/PORCH
SCALE 1:50

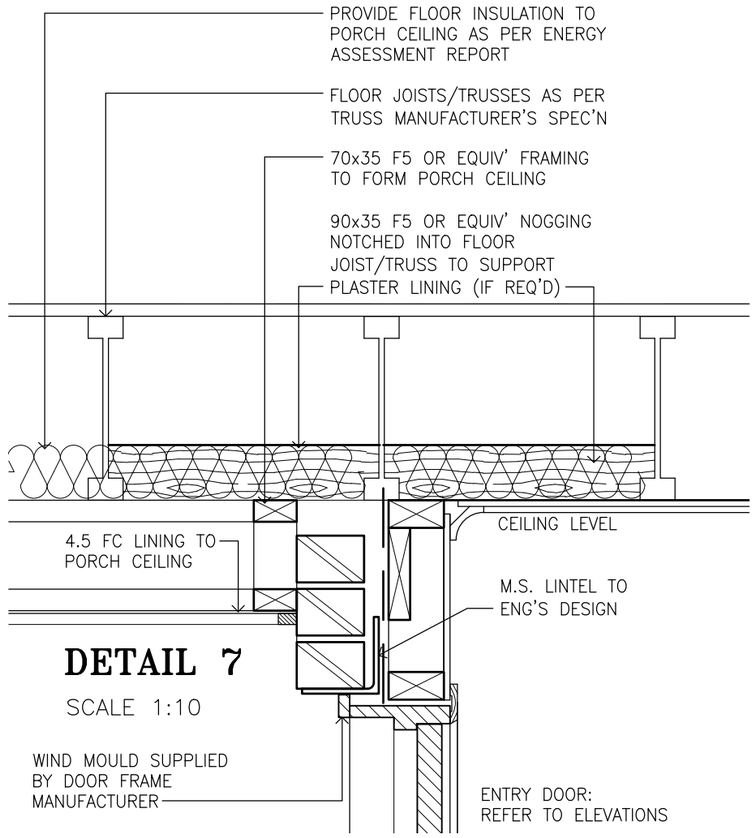

DETAIL 7
SCALE 1:10

Xpress
Built by SIMONDS

SIMONDS HOMES VICTORIA P/L ACN 050 197 610
HEAD OFFICE 1ST FLOOR 570 ST KILDA ROAD, MELBOURNE VIC 3004
TELEPHONE (03) 9682 0700
E-MAIL enquiries@simonds.com.au
ENQUIRIES 1300 SIMONDS
INTERNET www.simonds.com.au

Spec: XPRESS

FINAL DRAWINGS
COMPLETED BY: Amy Ibrahim

© COPYRIGHT 2003 SIMONDS IP Pty Ltd (ACN 144 839 805) (ABN 56 144 839 805)
NOT TO BE REPRODUCED IN PART OR WHOLE WITHOUT EXPRESS PERMISSION.

View: FACADE DETAIL 3

Customer:

Address: LOT 31, 3 OSKAR COURT, PAKENHAM

Version 1.0

Sheet No: 9.3A

Scale: 1:50@A3

Date: 18-Nov-21

House: CAYENNE 29_270-12.5A

Facade: MULBERRY

Drawn: D.H.P

Job No: 69975 ACC

Design: X00X

Mastered: T.N

Checked: X00X

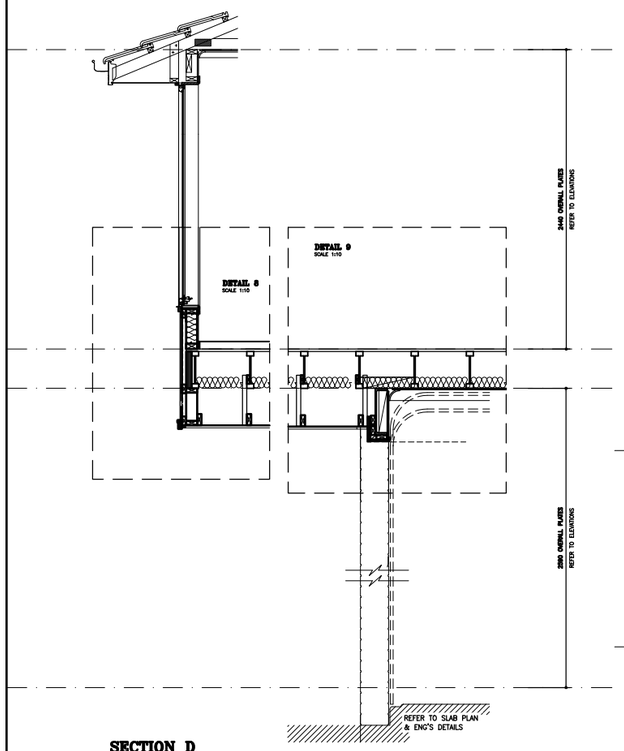

SECTION D
THROUGH GARAGE & ROOM OVER
SCALE 1:20

DETAIL 8

SCALE 1:10

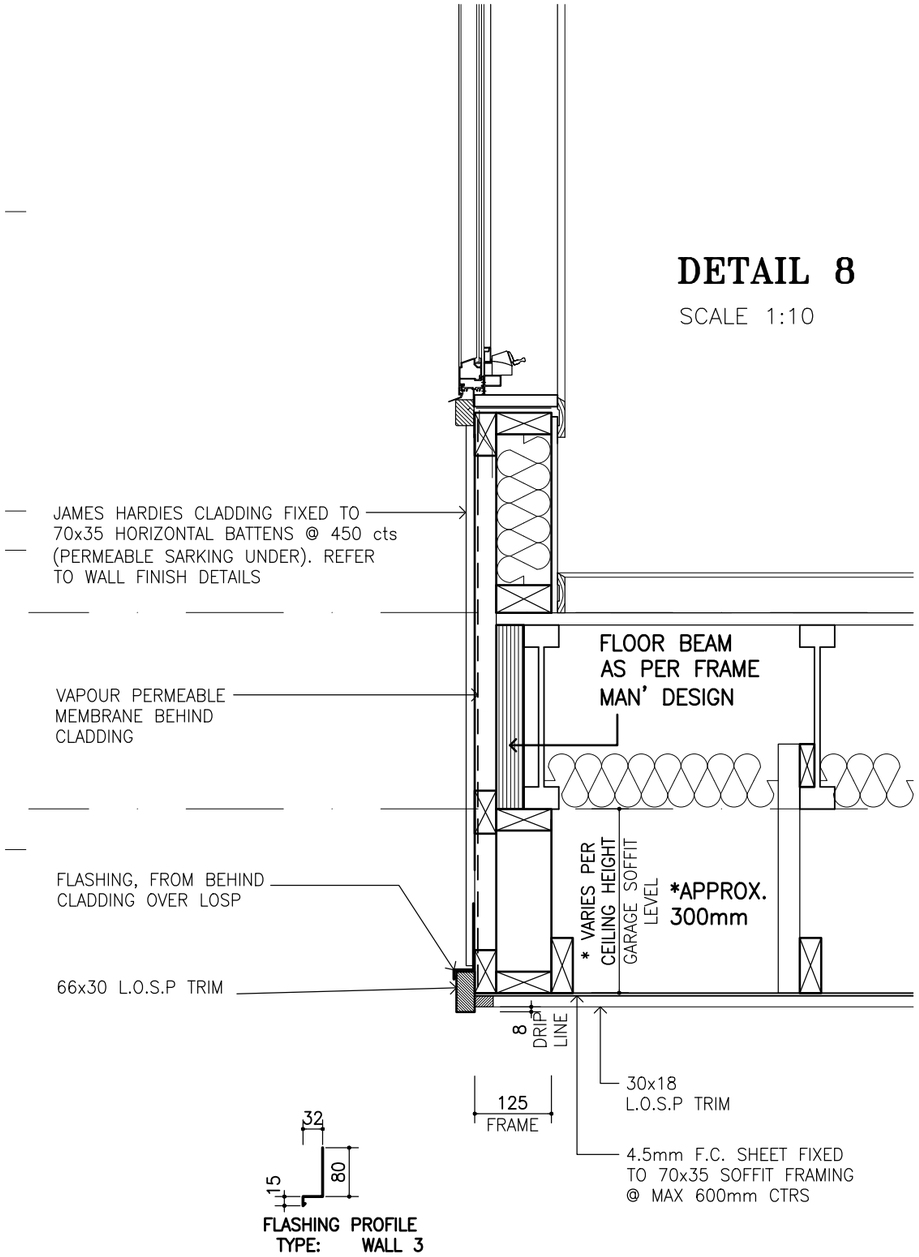

FLASHING PROFILE
TYPE: WALL 3

DETAIL 9

SCALE 1:10

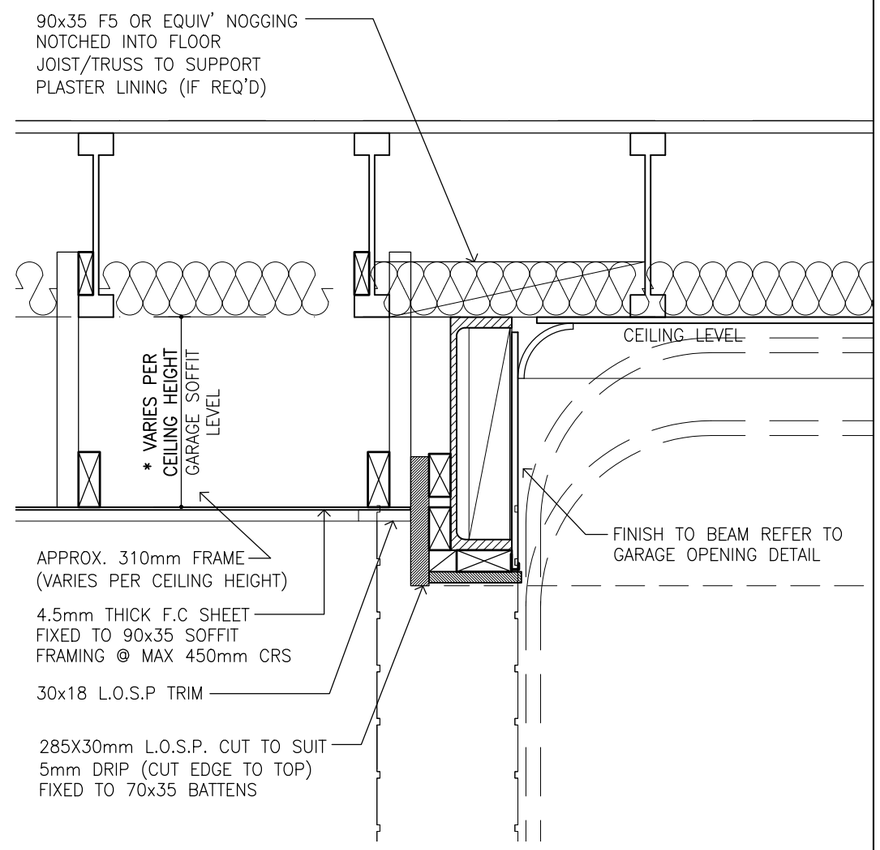

Xpress Built by SIMONDS

SIMONDS HOMES VICTORIA P/L ACN 050 197 610
HEAD OFFICE 1ST FLOOR 570 ST KILDA ROAD, MELBOURNE VIC 3004
TELEPHONE (03) 9682 0700
E-MAIL enquiries@simonds.com.au
ENQUIRIES 1300 SIMONDS
INTERNET www.simonds.com.au

Spec: XPRESS

FINAL DRAWINGS

COMPLETED BY: Amy Ibrahim

© COPYRIGHT 2003 SIMONDS IP Pty Ltd (ACN 144 839 805) (ABN 56 144 839 805)
NOT TO BE REPRODUCED IN PART OR WHOLE WITHOUT EXPRESS PERMISSION.

View: FACADE DETAIL 4

Cust

Address: LOT 31, 3 OSKAR COURT, PAKENHAM

Version 1.0

Sheet No: 9.4

Scale: 1:50@A3

Date: 18-Nov-21

House: CAYENNE 29_270-12.5A

Facade: MULBERRY

Drawn: D.H.P

Job No: 69975 ACC

Design: X00X

Mastered: T.N

Checked: X00X

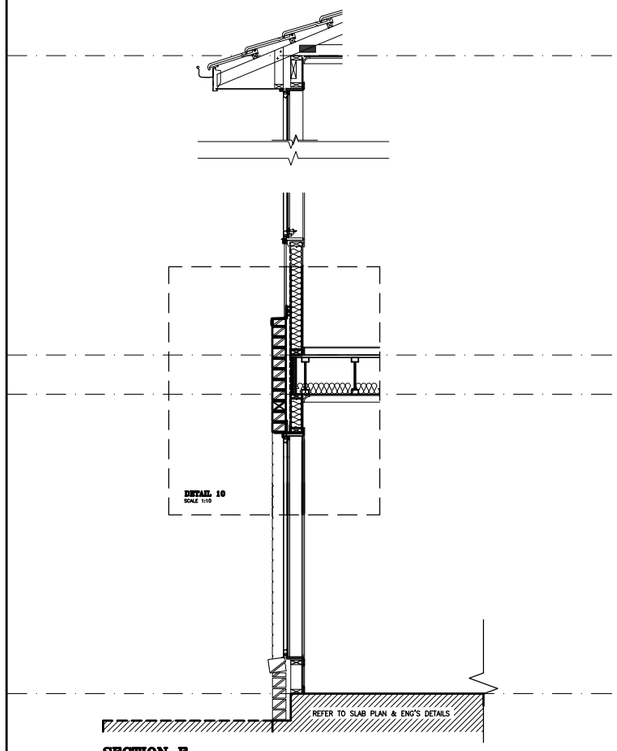

SECTION E
REAR HOUSE – LIGHT WEIGHT & BRICK JUNCTION
SCALE 1:20

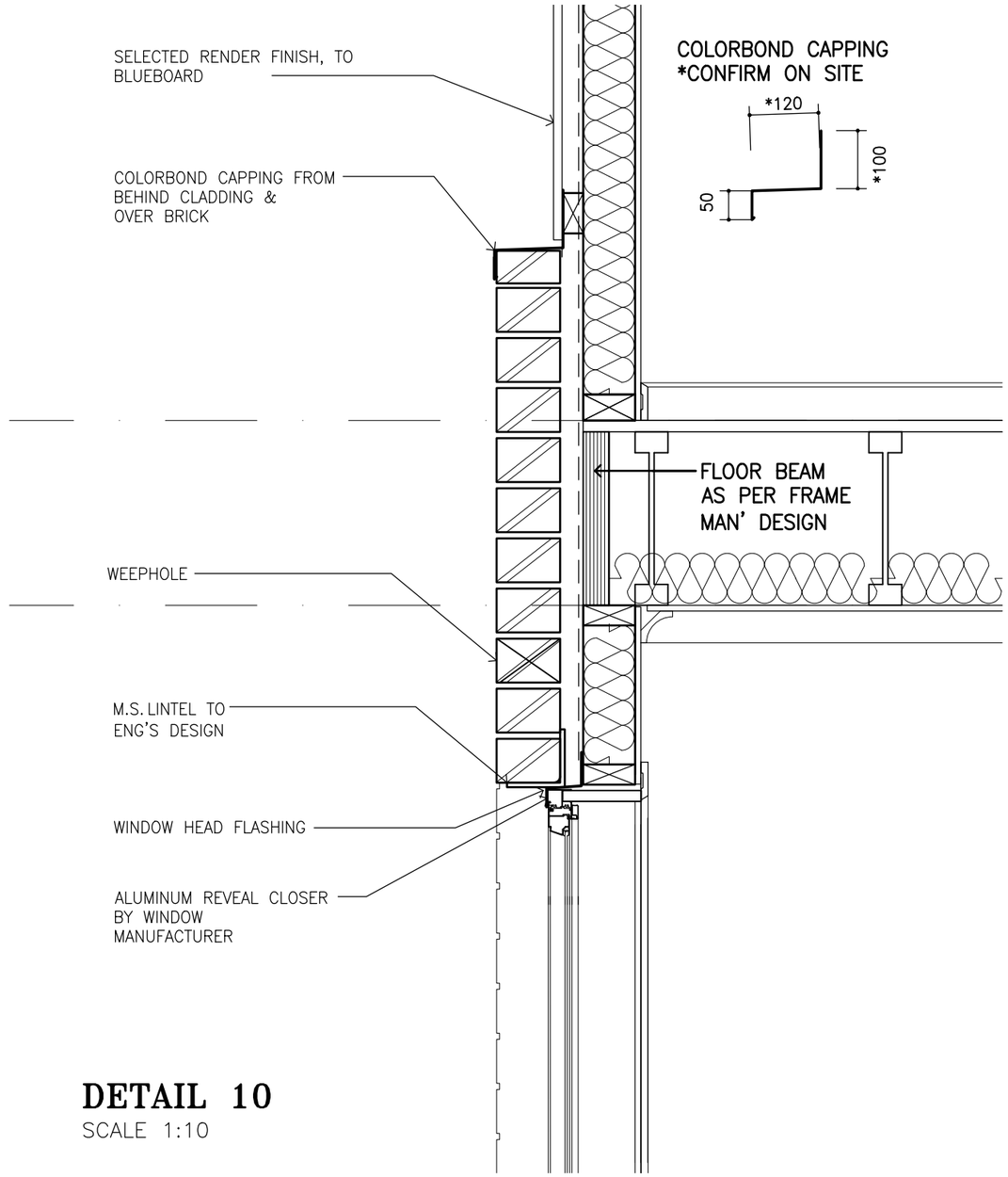

DETAIL 10
SCALE 1:10

Xpress Built by SIMONDS

SIMONDS HOMES VICTORIA P/L ACN 050 197 610
HEAD OFFICE 1ST FLOOR 570 ST KILDA ROAD, MELBOURNE VIC 3004
TELEPHONE (03) 9682 0700
E-MAIL enquiries@simonds.com.au
ENQUIRIES 1300 SIMONDS
INTERNET www.simonds.com.au

Spec: XPRESS

FINAL DRAWINGS

COMPLETED BY: Amy Ibrahim

© COPYRIGHT 2003 SIMONDS IP Pty Ltd (ACN 144 839 805) (ABN 56 144 839 805) NOT TO BE REPRODUCED IN PART OR WHOLE WITHOUT EXPRESS PERMISSION.

View: FACADE DETAIL 5

Customer:

Address: LOT 31, 3 OSKAR COURT, PAKENHAM

Version 1.0

Sheet No: 9.5

Scale: 1:50@A3

Date: 18-Nov-21

House: CAYENNE 29_270–12.5A

Facade: MULBERRY

Drawn: D.H.P

Job No: 69975 ACC

Design: X00X

Mastered: T.N

Checked: X00X

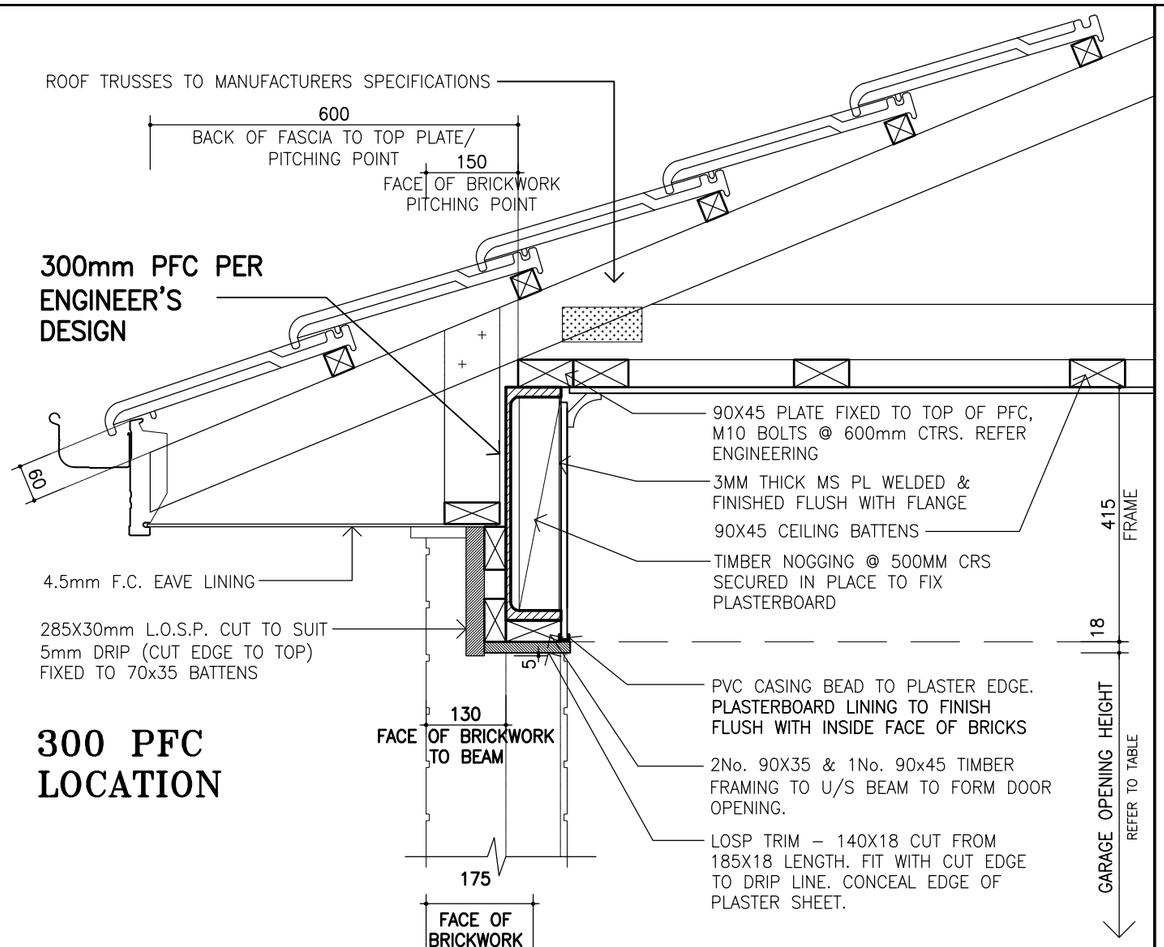

300 PFC LOCATION

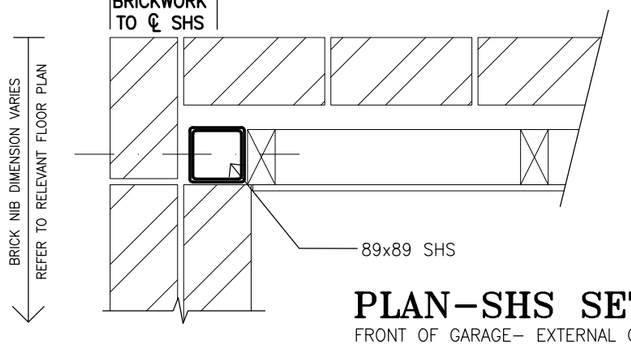

PLAN–SHS SETOUT

FRONT OF GARAGE– EXTERNAL CORNER

GARAGE CEILING HEIGHT (mm)	G.F. CEILING HEIGHT (mm)	GARAGE DOOR OPENING HEIGHT (mm)
2575	2440	2140
2725	2590	2290
2875	2740	2440

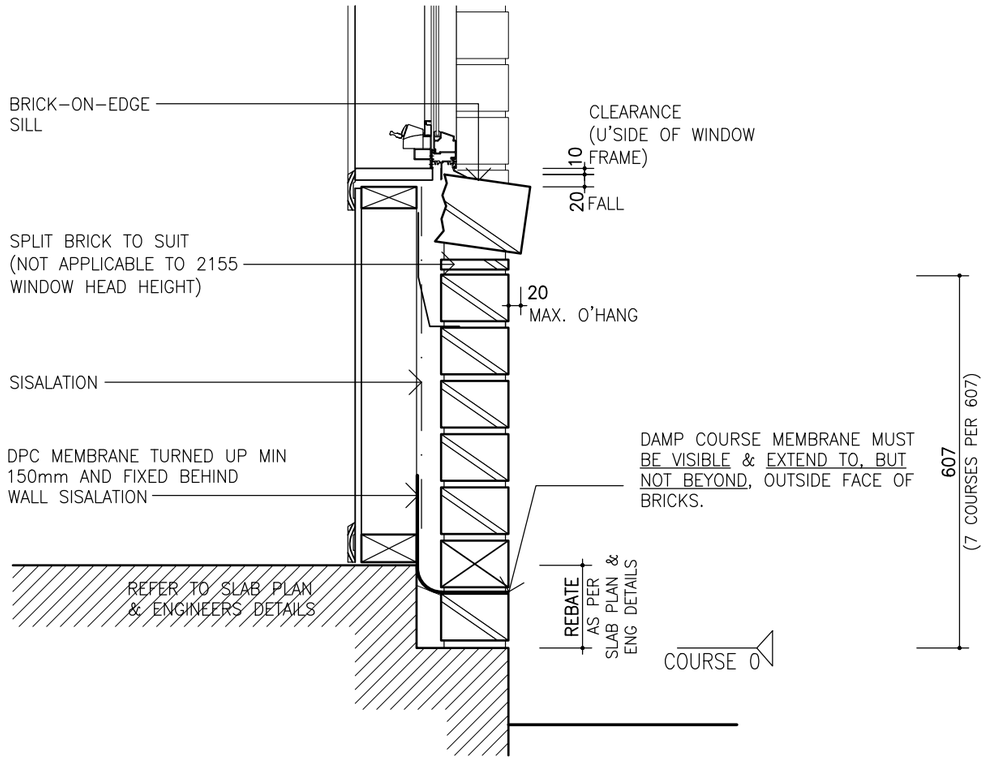

WEEPHOLE & BRICK SILL DETAIL

SCALE 1:10

Xpress Built by SIMONDS

SIMONDS HOMES VICTORIA P/L ACN 050 197 610
HEAD OFFICE 1ST FLOOR 570 ST KILDA ROAD, MELBOURNE VIC 3004
TELEPHONE (03) 9682 0700
E-MAIL enquiries@simonds.com.au
ENQUIRIES 1300 SIMONDS
INTERNET www.simonds.com.au

Spec: XPRESS

FINAL DRAWINGS

COMPLETED BY: Amy Ibrahim

© COPYRIGHT 2003 SIMONDS IP Pty Ltd (ACN 144 839 805) (ABN 56 144 839 805) NOT TO BE REPRODUCED IN PART OR WHOLE WITHOUT EXPRESS PERMISSION.

View: GARAGE BEAM SECTION WEEPHOLE & BRICK SILL DETAIL

Customer:

Address: LOT 31, 3 OSKAR COURT, PAKENHAM

Version 1.0

Sheet No: 9.6

Scale: 1:10@A3

Date: 18-Nov-21

House: CAYENNE 29_270–12.5A

Facade: MULBERRY

Drawn: D.H.P

Job No: 69975 ACC

Design: X00X

Mastered: T.N

Checked: X00X

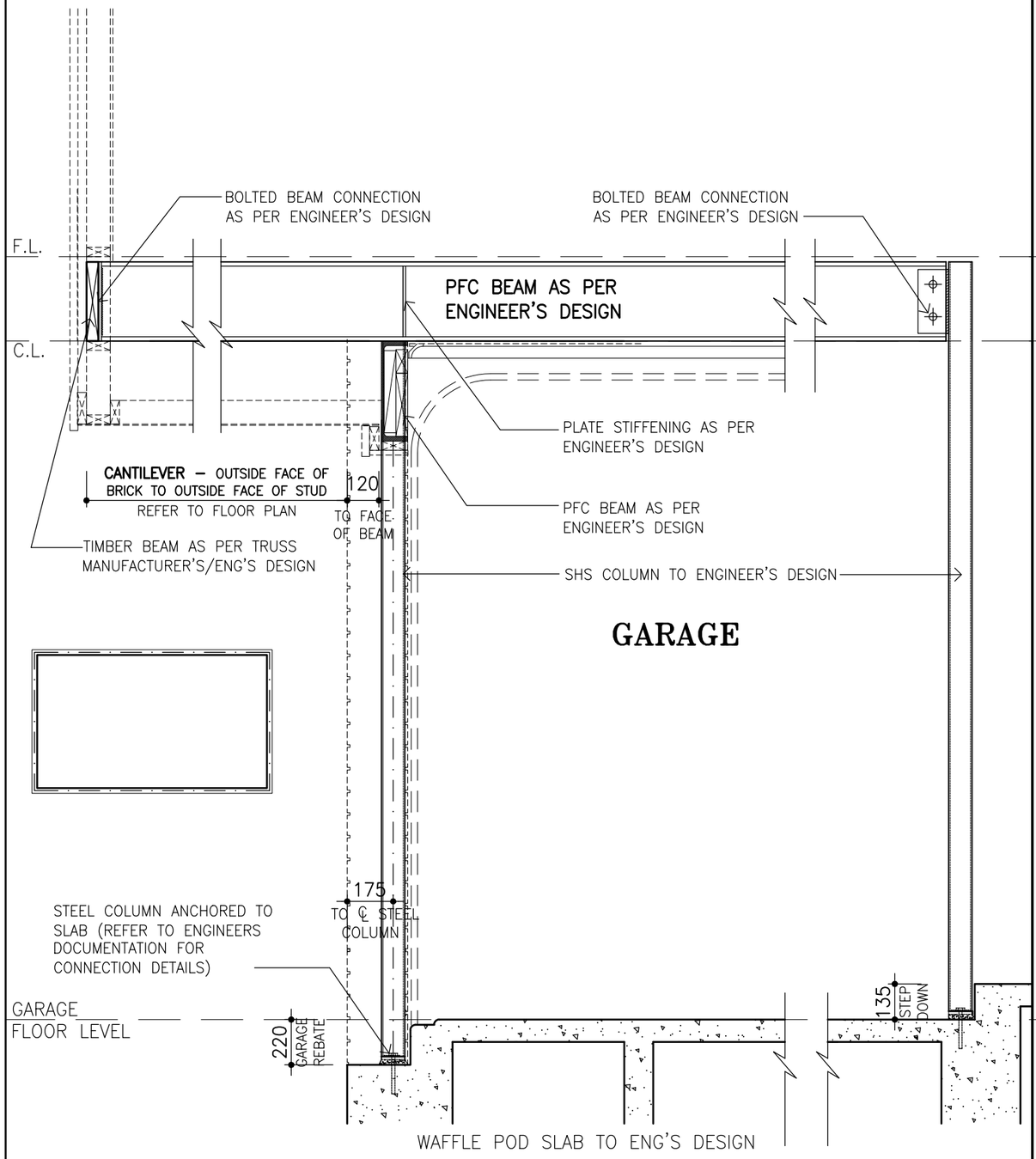

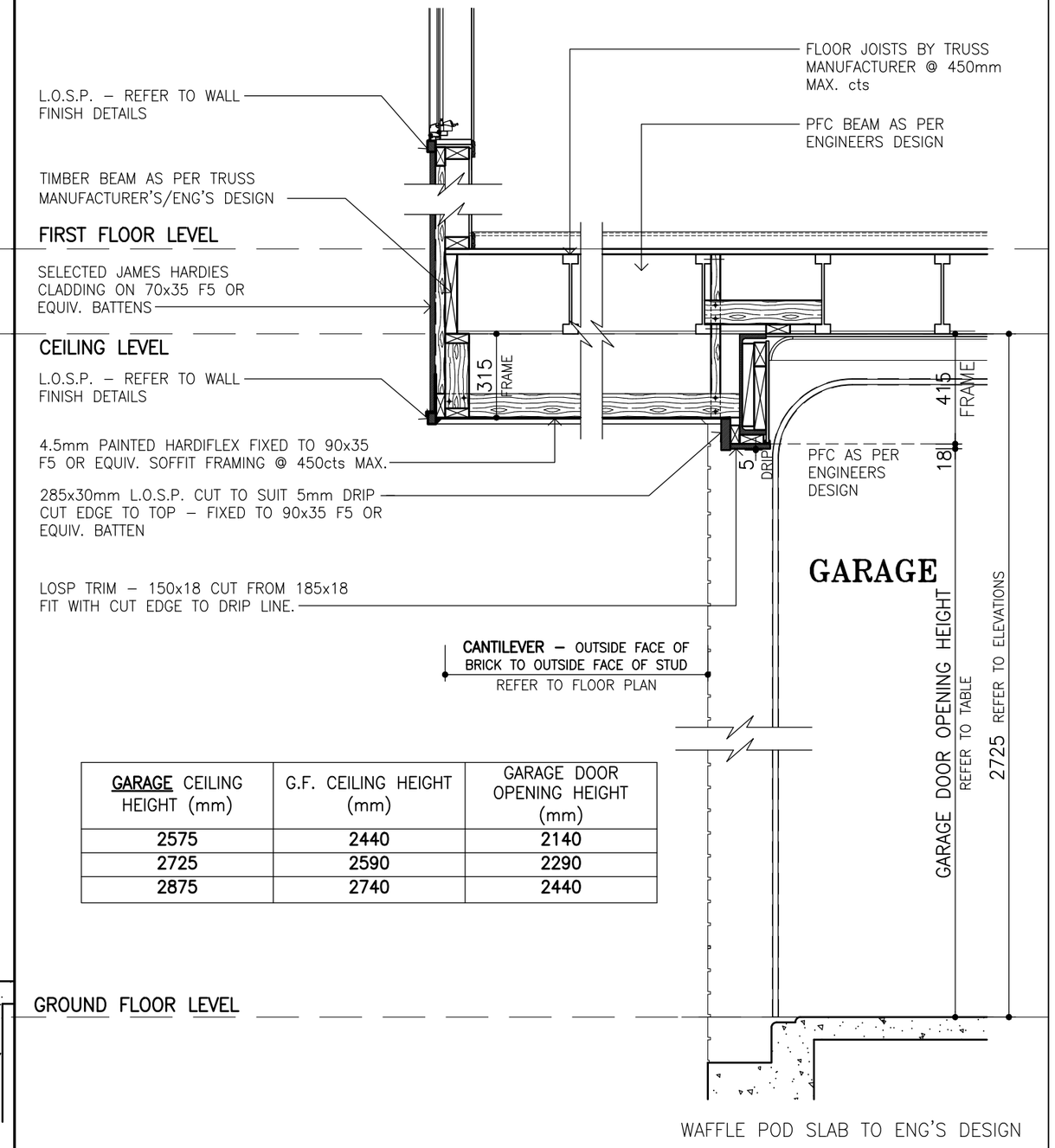

GARAGE CEILING HEIGHT (mm)	G.F. CEILING HEIGHT (mm)	GARAGE DOOR OPENING HEIGHT (mm)
2575	2440	2140
2725	2590	2290
2875	2740	2440

Xpress Built by SIMONDS

SIMONDS HOMES VICTORIA P/L ACN 050 197 610
HEAD OFFICE 1ST FLOOR 570 ST KILDA ROAD, MELBOURNE VIC 3004
TELEPHONE (03) 9682 0700
E-MAIL enquiries@simonds.com.au
ENQUIRIES 1300 SIMONDS
INTERNET www.simonds.com.au

Spec: XPRESS

FINAL DRAWINGS

COMPLETED BY: Amy Ibrahim

© COPYRIGHT 2003 SIMONDS IP Pty Ltd (ACN 144 839 805) (ABN 56 144 839 805) NOT TO BE REPRODUCED IN PART OR WHOLE WITHOUT EXPRESS PERMISSION.

View: CANTILEVERED STEEL SETOUT – 300 PFC

Customer:

Address: LOT 31, 3 OSKAR COURT, PAKENHAM

Version 1.0

Sheet No: 9.7

Scale: 1:20@A3

Date: 18-Nov-21

House: CAYENNE 29_270–12.5A

Facade: MULBERRY

Drawn: D.H.P

Job No: 69975 ACC

Design: X00X

Mastered: T.N

Checked: X00X

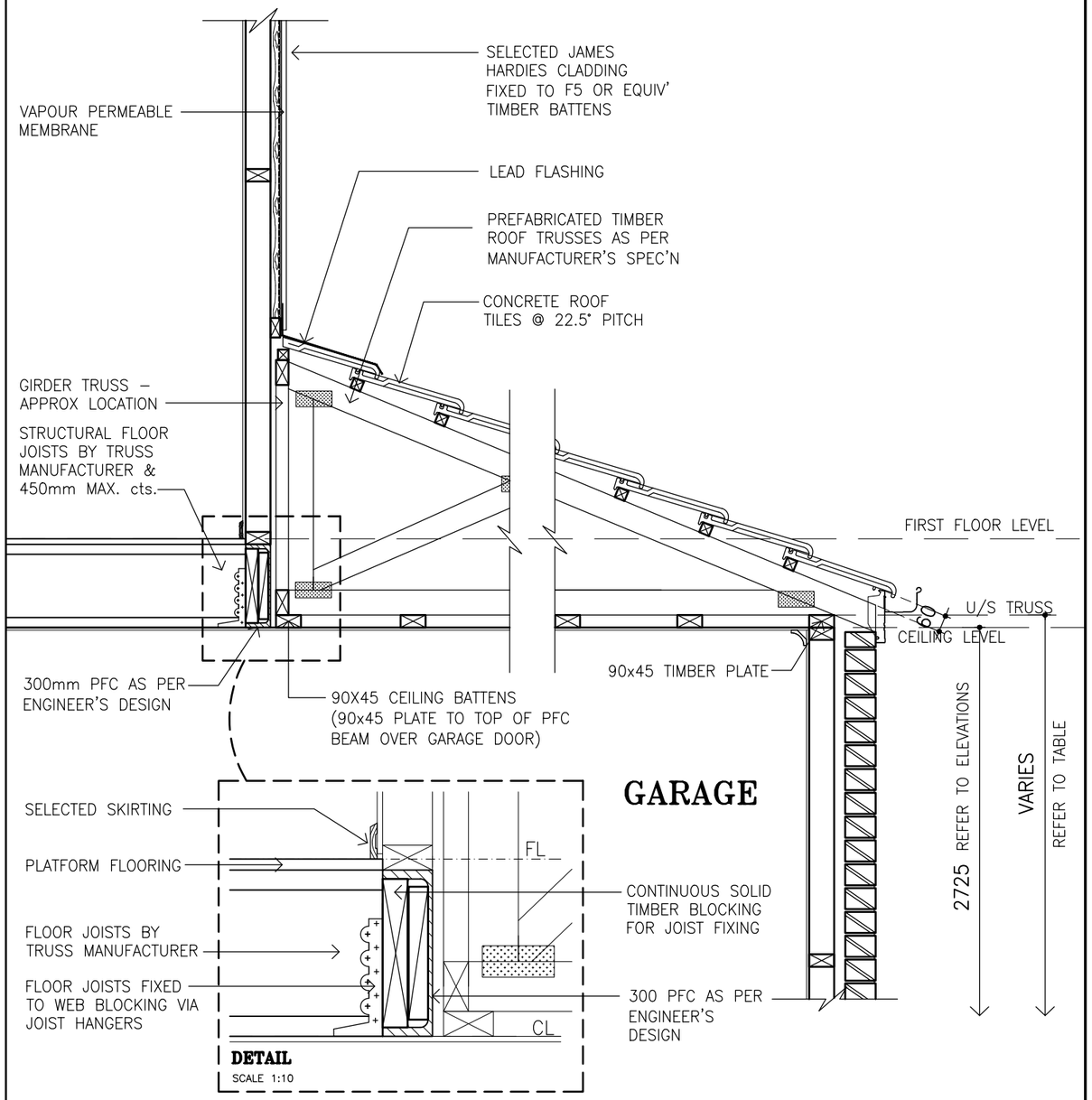

GARAGE CEILING HEIGHT (mm)	G.F. CEILING HEIGHT (mm)	F.L. TO U/SIDE GARAGE ROOF TRUSS (mm)
2575	2440	2620
2725	2590	2770
2875	2740	2920

Xpress Built by SIMONDS

SIMONDS HOMES VICTORIA P/L ACN 050 197 610
HEAD OFFICE 1ST FLOOR 570 ST KILDA ROAD, MELBOURNE VIC 3004
TELEPHONE (03) 9682 0700
E-MAIL enquiries@simonds.com.au
ENQUIRIES 1300 SIMONDS
INTERNET www.simonds.com.au

Spec: XPRESS

FINAL DRAWINGS

COMPLETED BY: Amy Ibrahim

© COPYRIGHT 2003 SIMONDS IP Pty Ltd (ACN 144 839 805) (ABN 56 144 839 805) NOT TO BE REPRODUCED IN PART OR WHOLE WITHOUT EXPRESS PERMISSION.

View: ROOM OVER GARAGE RETURN BEAM SETOUT – 300PFC

Customer:

Address: LOT 31, 3 OSKAR COURT, PAKENHAM

Version 1.0

Sheet No: 9.8

Scale: 1:20@A3

Date: 18-Nov-21

House: CAYENNE 29_270–12.5A

Facade: MULBERRY

Drawn: D.H.P

Job No: 69975 ACC

Design: X00X

Mastered: T.N

Checked: X00X

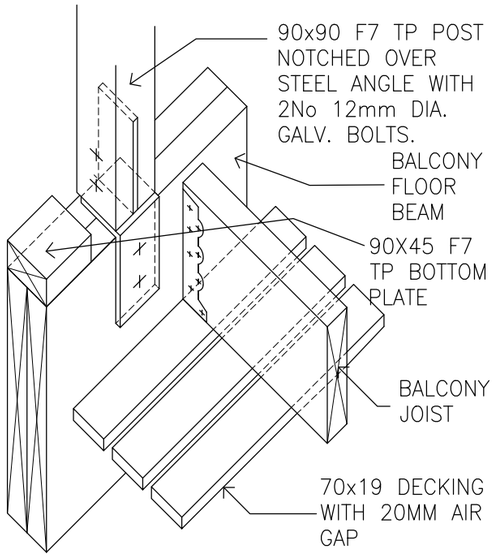

BALUSTRADE POST CONNECTION 01

SCALE 1:10

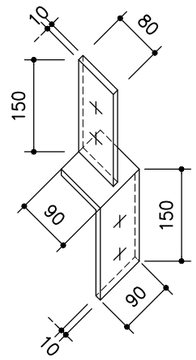

BALUSTRADE POST BRACKET

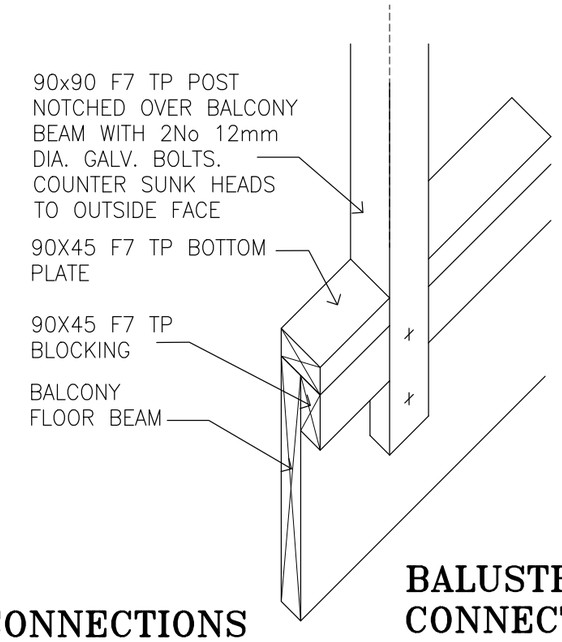

POST CONNECTIONS

SCALE 1:10

BALUSTRADE POST CONNECTION 02

SCALE 1:10

Xpress Built by SIMONDS

SIMONDS HOMES VICTORIA P/L ACN 050 197 610
HEAD OFFICE 1ST FLOOR 570 ST KILDA ROAD, MELBOURNE VIC 3004
TELEPHONE (03) 9682 0700
E-MAIL enquiries@simonds.com.au
ENQUIRIES 1300 SIMONDS
INTERNET www.simonds.com.au

Spec: XPRESS

FINAL DRAWINGS

COMPLETED BY: Amy Ibrahim

© COPYRIGHT 2003 SIMONDS IP Pty Ltd (ACN 144 839 805) (ABN 56 144 839 805) NOT TO BE REPRODUCED IN PART OR WHOLE WITHOUT EXPRESS PERMISSION.

View: BALUSTRADE POST CONNECTION

Customer:

Address: LOT 31, 3 OSKAR COURT, PAKENHAM

Version 1.0

Sheet No: 9.6

Scale: 1:10@A3

Date: 18-Nov-21

House: CAYENNE 29_270-12.5A

Facade: MULBERRY

Drawn: D.H.P

Job No: 69975 ACC

Design: X00X

Mastered: T.N

Checked: X00X

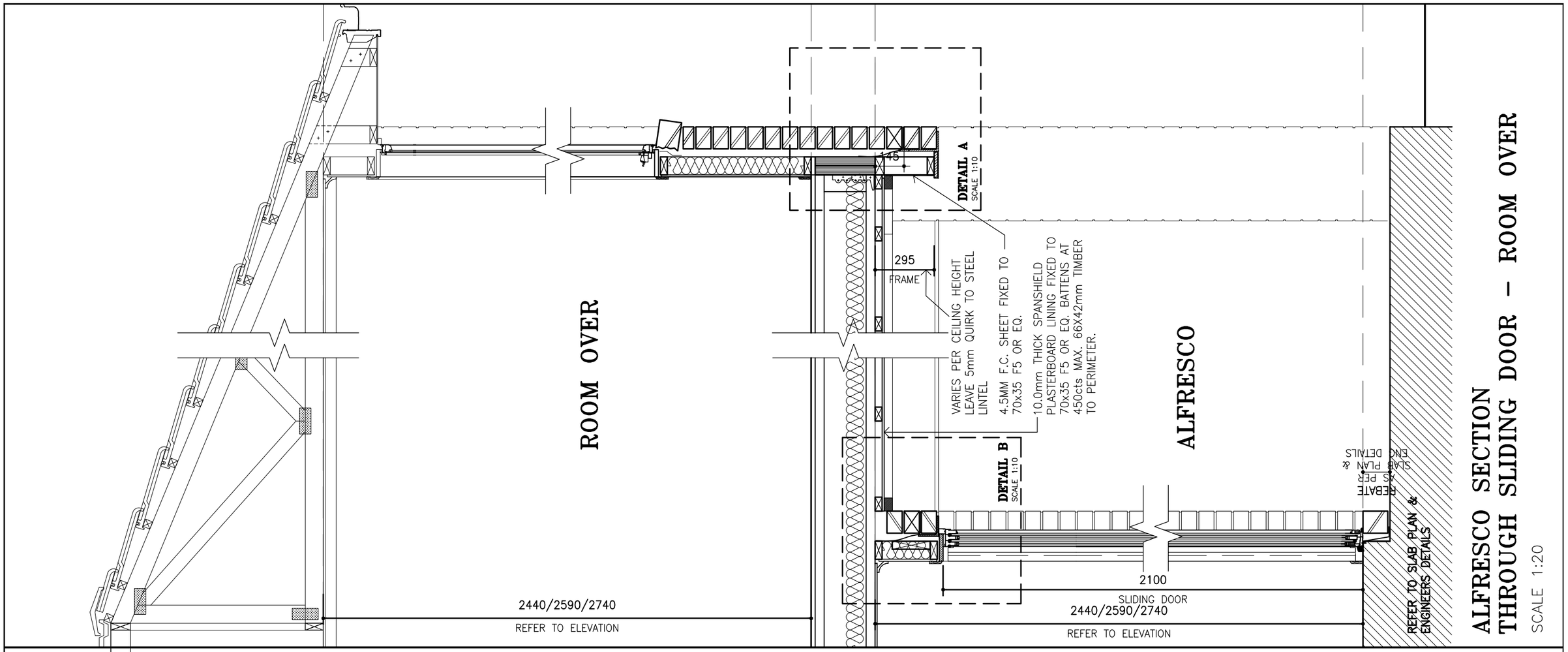

ALFRESCO SECTION THROUGH SLIDING DOOR – ROOM OVER

SCALE 1:20

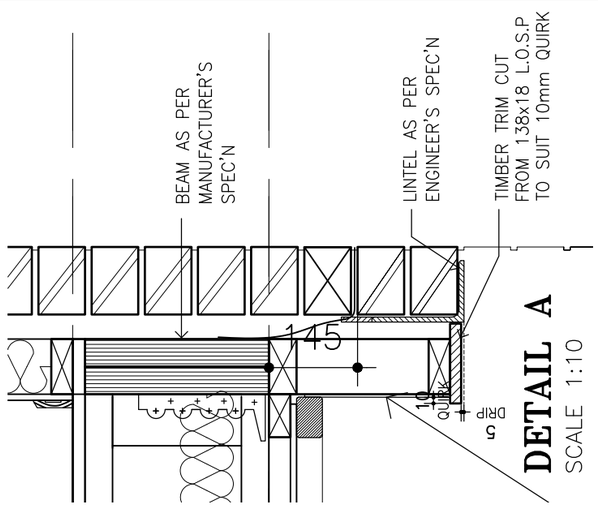

DETAIL A

SCALE 1:10

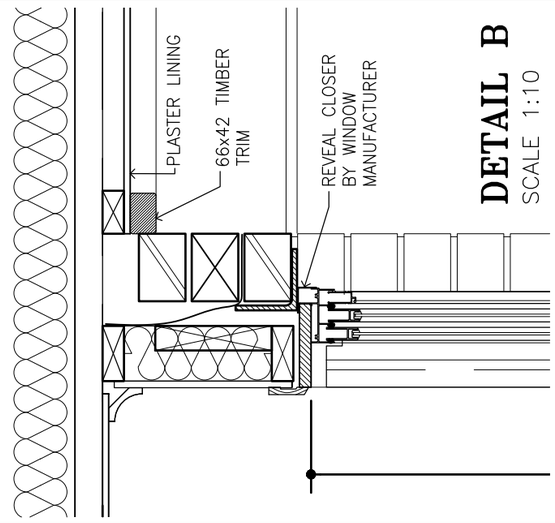

DETAIL B

SCALE 1:10

Xpress
Built by SIMONDS

SIMONDS HOMES VICTORIA P/L ACN 050 197 610
HEAD OFFICE 1ST FLOOR 570 ST KILDA ROAD, MELBOURNE VIC 3004
TELEPHONE (03) 9682 0700
E-MAIL enquiries@simonds.com.au
ENQUIRIES 1300 SIMONDS
INTERNET www.simonds.com.au

Spec: XPRESS

FINAL DRAWINGS

COMPLETED BY: Amy Ibrahim

© COPYRIGHT 2003 SIMONDS IP Pty Ltd (ACN 144 839 805) (ABN 56 144 839 805)
NOT TO BE REPRODUCED IN PART OR WHOLE WITHOUT EXPRESS PERMISSION.

View: ALFRESCO SECTION

Customer:

Address: LOT 31, 3 OSKAR COURT, PAKENHAM

Version 1.0

Sheet No: 9.10

Scale: 1:20@A3

Date: 18-Nov-21

House: CAYENNE 29_270–12.5A

Facade: MULBERRY

Drawn: D.H.P

Job No: 69975 ACC

Design: X00X

Mastered: T.N

Checked: X00X

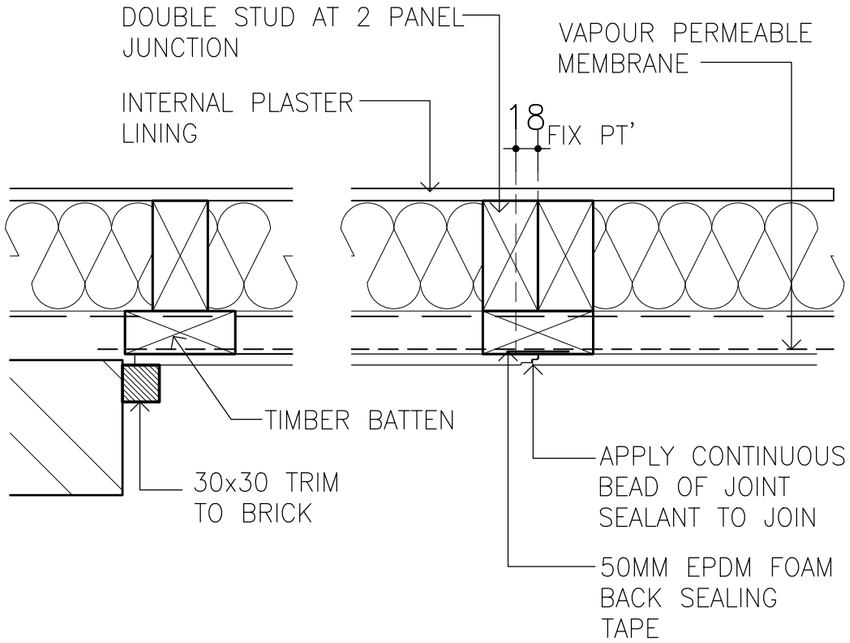

HORIZONTAL JOINT & EASYLAP TO BRICK

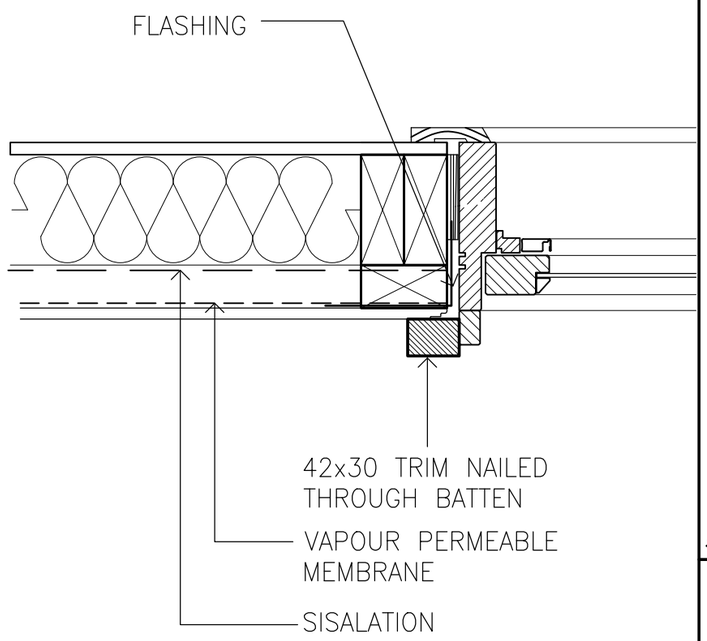

TIMBER WINDOW: PLAN

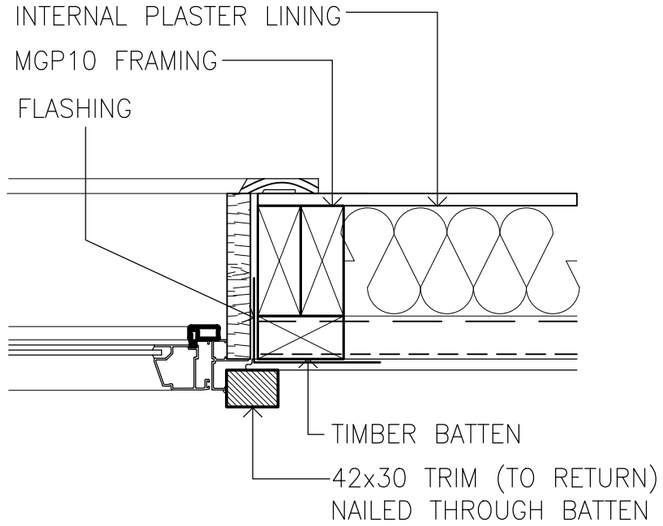

ALUMINIUM WINDOW: PLAN

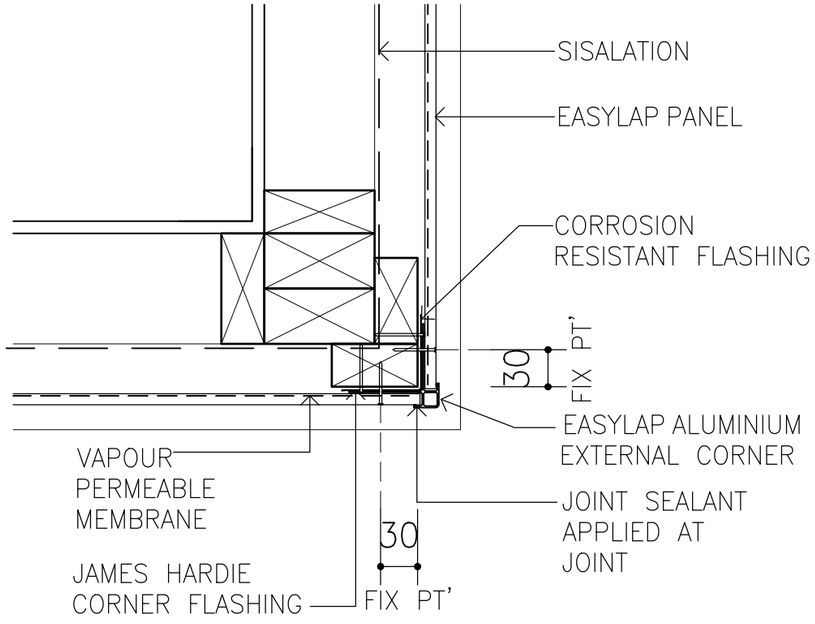

EXTERNAL BOX CORNER

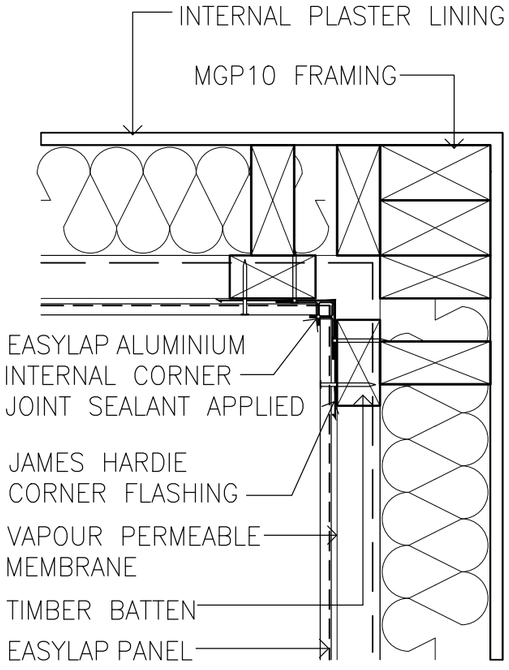

INTERNAL BOX CORNER

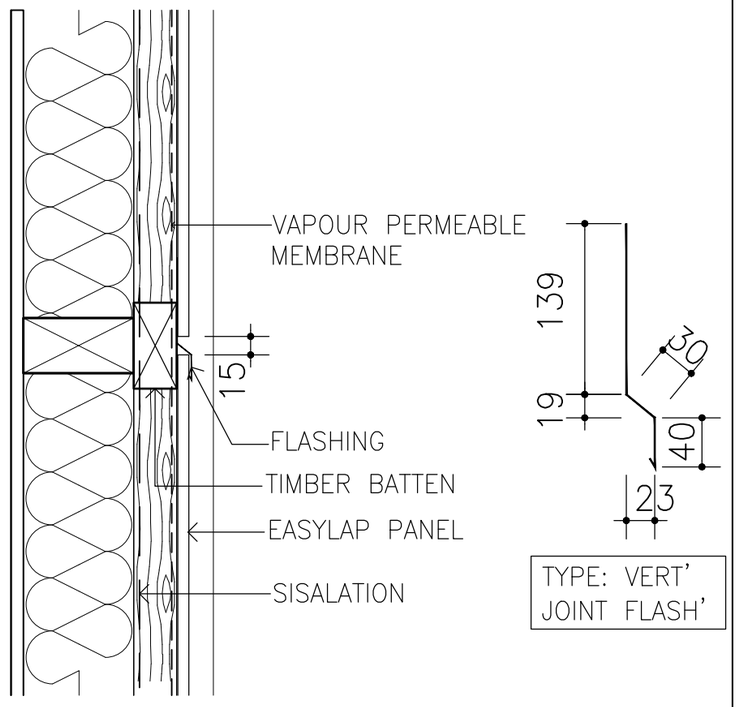

VERTICAL SECTION

Xpress Built by SIMONDS

SIMONDS HOMES VICTORIA P/L ACN 050 197 610
HEAD OFFICE 1ST FLOOR 570 ST KILDA ROAD, MELBOURNE VIC 3004
TELEPHONE (03) 9682 0700
E-MAIL enquiries@simonds.com.au
ENQUIRIES 1300 SIMONDS
INTERNET www.simonds.com.au

Spec: XPRESS

FINAL DRAWINGS

COMPLETED BY: Amy Ibrahim

© COPYRIGHT 2003 SIMONDS IP Pty Ltd (ACN 144 839 805) (ABN 56 144 839 805) NOT TO BE REPRODUCED IN PART OR WHOLE WITHOUT EXPRESS PERMISSION.

View: WALL FINISH DETAILS 3

Customer:

Address: LOT 31, 3 OSKAR COURT, PAKENHAM

Version 1.0

Sheet No: 9.11

Scale: 1:5@A3

Date: 18-Nov-21

House: CAYENNE 29_270-12.5A

Facade: MULBERRY

Drawn: D.H.P

Job No: 69975 ACC

Design: X00X

Mastered: T.N

Checked: X00X

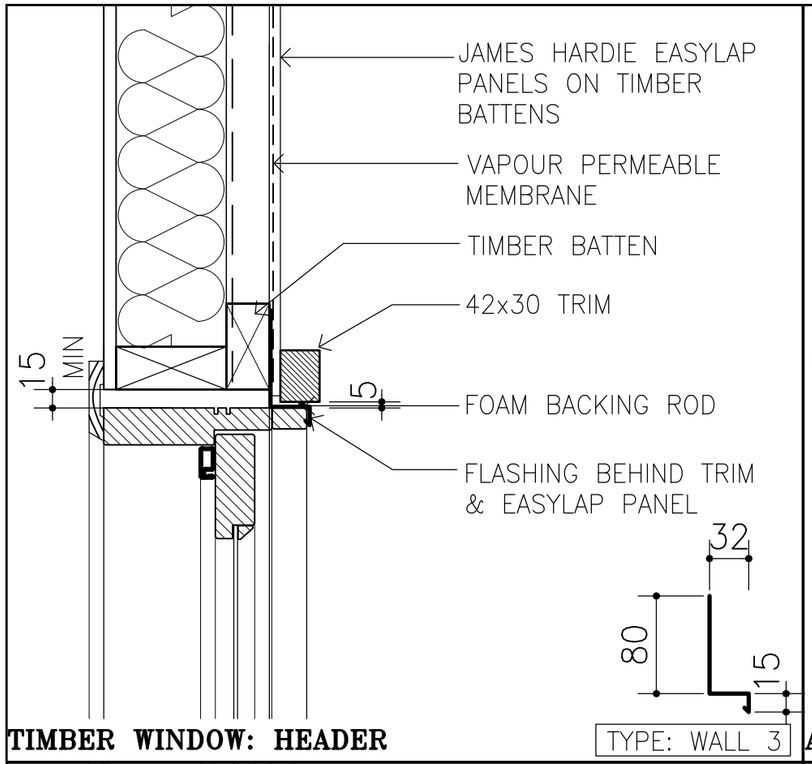

TIMBER WINDOW: HEADER

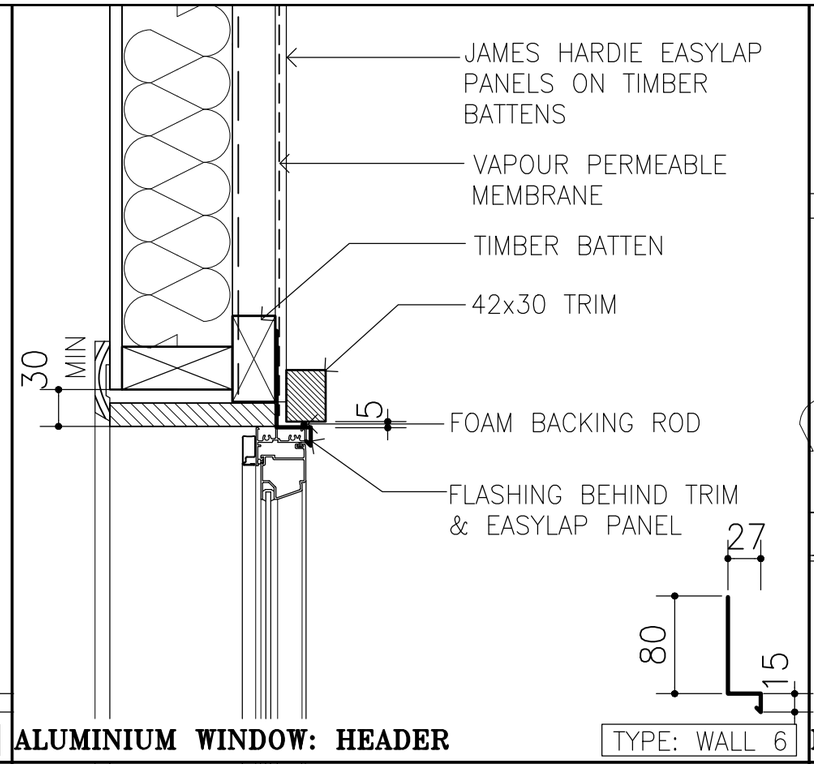

ALUMINIUM WINDOW: HEADER

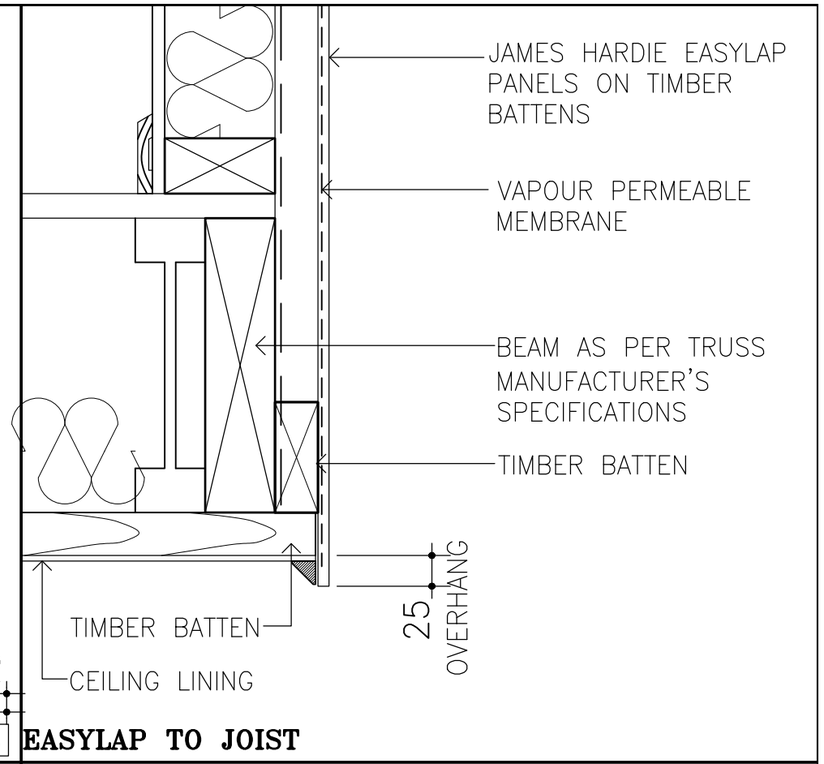

EASYLAP TO JOIST

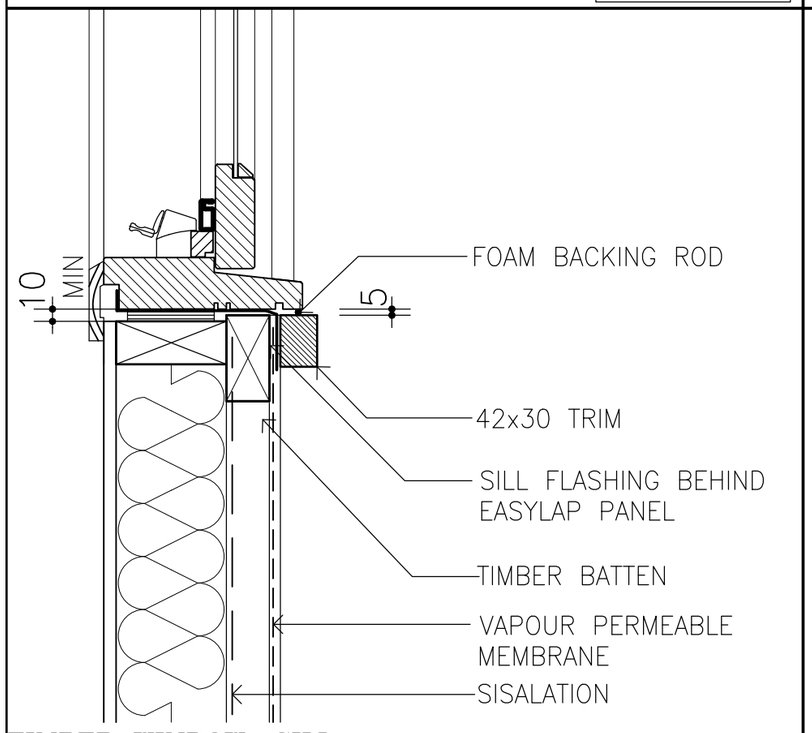

TIMBER WINDOW: SILL

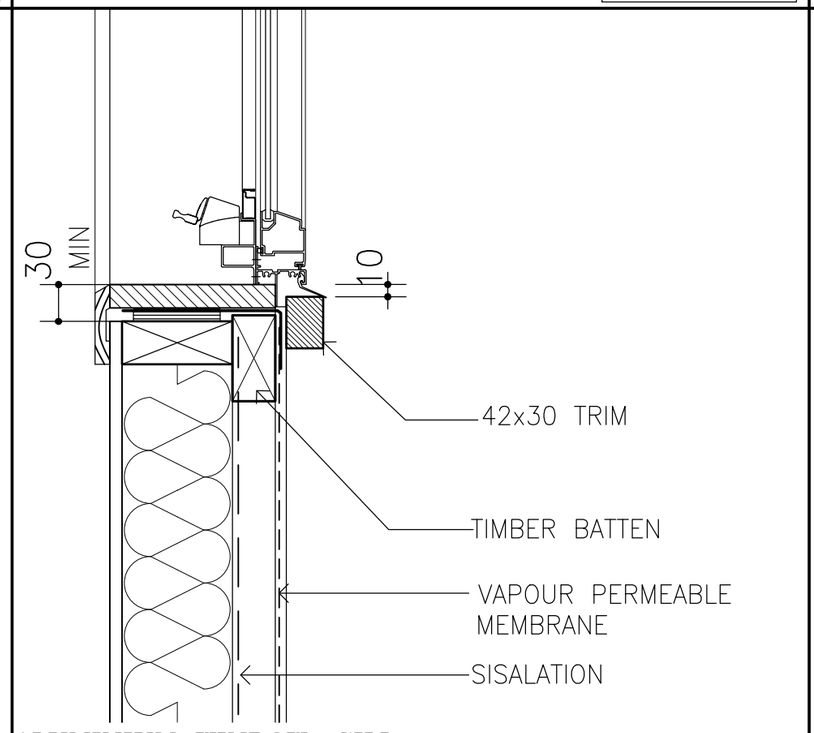

ALUMINIUM WINDOW: SILL

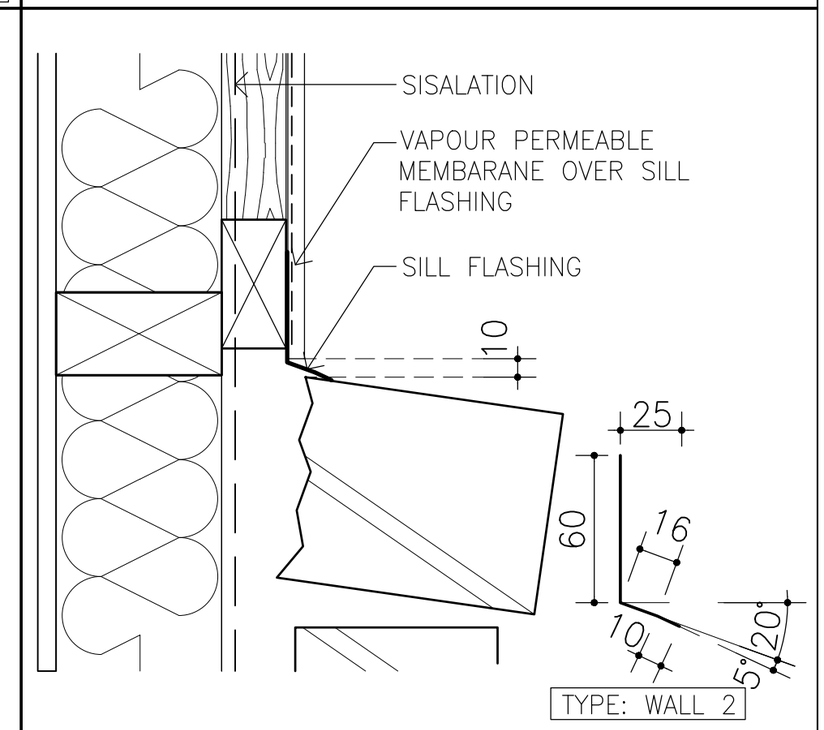

BRICK SILL SECTION

Xpress Built by SIMONDS

SIMONDS HOMES VICTORIA P/L ACN 050 197 610
HEAD OFFICE 1ST FLOOR 570 ST KILDA ROAD, MELBOURNE VIC 3004
TELEPHONE (03) 9682 0700
E-MAIL enquiries@simonds.com.au
ENQUIRIES 1300 SIMONDS
INTERNET www.simonds.com.au

Spec: XPRESS

FINAL DRAWINGS

COMPLETED BY: Amy Ibrahim

© COPYRIGHT 2003 SIMONDS IP Pty Ltd (ACN 144 839 805) (ABN 56 144 839 805) NOT TO BE REPRODUCED IN PART OR WHOLE WITHOUT EXPRESS PERMISSION.

View: WALL FINISH DETAILS 4

Customer:

Address: LOT 31, 3 OSKAR COURT, PAKENHAM

Version 1.0

Sheet No: 9.12

Scale: 1:5@A3

Date: 18-Nov-21

House: CAYENNE 29_270-12.5A

Facade: MULBERRY

Drawn: D.H.P

Job No: 69975 ACC

Design: X00X

Mastered: T.N

Checked: X00X