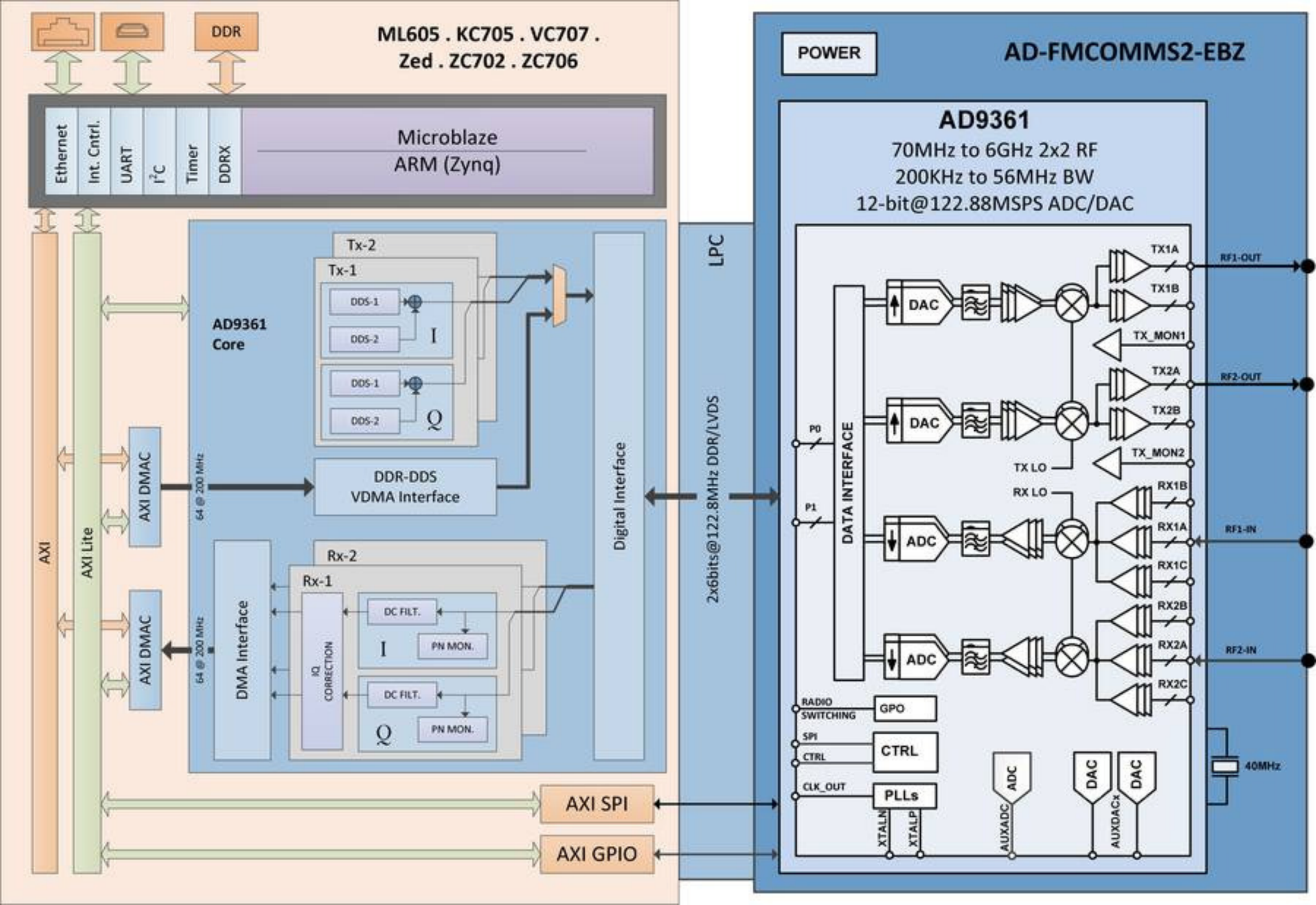
ML605 . KC705 . VC707 .
Zed . ZC702 . ZC706
DDR
Ethernet
Int. Cntrl.
UART
I²C
Timer
DDRX
Microblaze
ARM (Zynq)
AXI
AXI Lite
AXI DMAC
AXI DMAC
AD9361
Core
Tx-2
Tx-1
DDS-1
DDS-2
I
DDS-1
DDS-2
Q
DDR-DDS
VDMA Interface
64 @ 200 MHz
64 @ 200 MHz
DMA Interface
Rx-2
Rx-1
IQ CORRECTION
DC FILT.
PN MON.
I
DC FILT.
PN MON.
Q
Digital Interface
LPC
2x6bits@122.8MHz DDR/LVDS
AXI SPI
AXI GPIO
POWER
AD-FMCOMMS2-EBZ
AD9361
70MHz to 6GHz 2x2 RF
200KHz to 56MHz BW
12-bit@122.88MSPS ADC/DAC
DATA INTERFACE
P0
P1
DAC
DAC
ADC
ADC
TX LO
RX LO
TX1A
TX1B
TX_MON1
TX2A
TX2B
TX_MON2
RX1B
RX1A
RX1C
RX2B
RX2A
RX2C
RF1-OUT
RF2-OUT
RF1-IN
RF2-IN
RADIO SWITCHING
GPO
SPI
CTRL
CTRL
CLK_OUT
PLLs
XTALN
XTALP
ADC
AUXADC
DAC
AUXDACx
DAC
40MHz