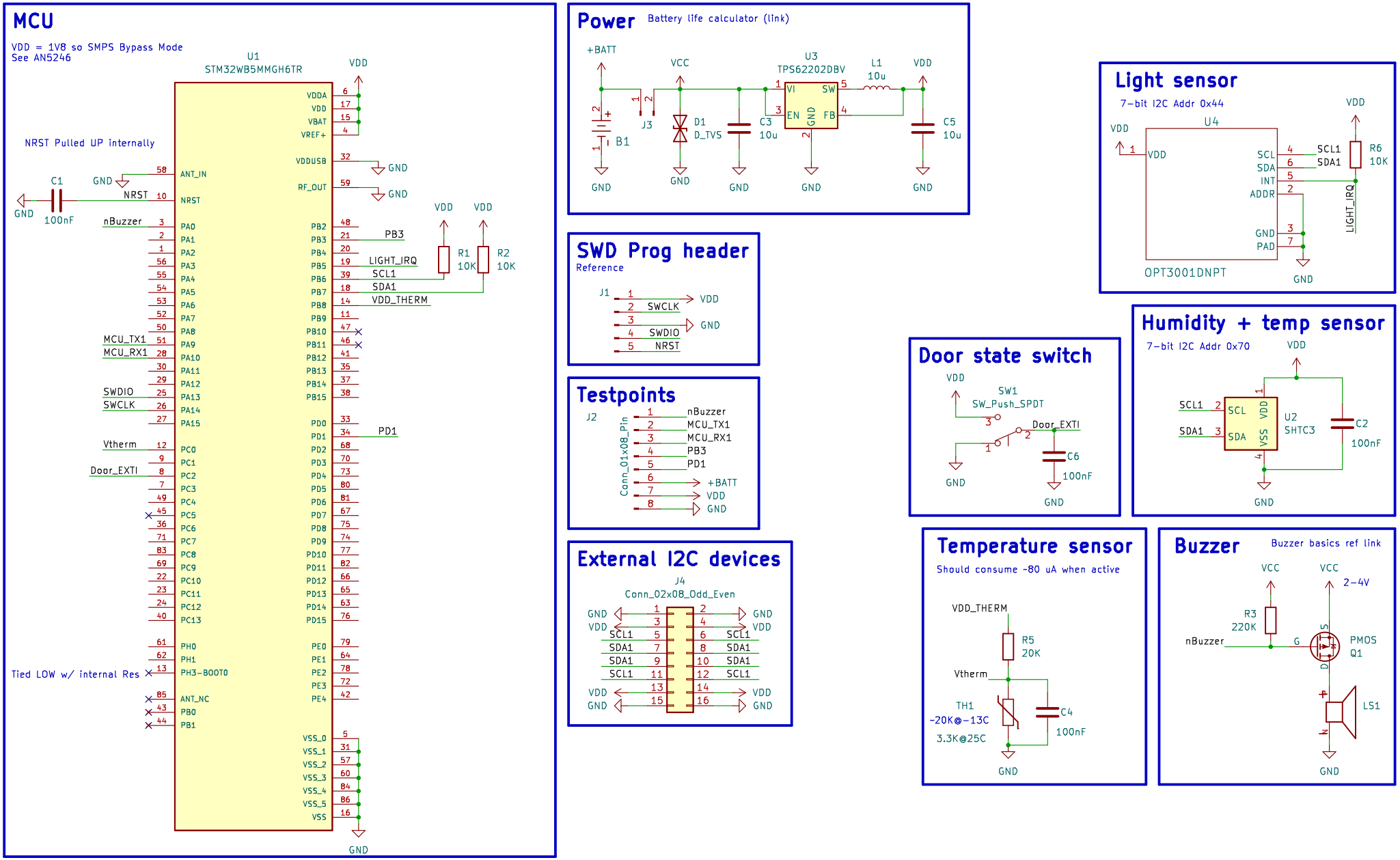

IoT Home Automation

2023-06-12

Designed by Gabriel Gagne

A