A Morse Code-based Optical Communication System

Kartik Lahoti, Puni Aditya and G V V Sharma
Department of Electrical Engineering
IIT Hyderabad

***Abstract*—This paper outlines a comprehensive multi-stage development of a Morse Code On-Off Keying (OOK) system. We first establish a baseline Visible Light Communication (VLC) link to demonstrate the fundamental principles of communication over an optical link. Subsequently, we introduce Infrared (IR) communication to extend the range and explore more advanced techniques to improve the system performance. This is done by using the Arduino as the transceiver platform. Our communication scheme is successfully demonstrated for a range of up to 2 meters.**

***Index Terms*—Visible Light Communication (VLC), Infrared (IR), Stepwise Derivative Method (SDM), Goertzel Algorithm, On-Off Keying (OOK), Adaptive Thresholding.**

I. Introduction

Wireless optical communication is highly dependent on clear Line-of-Sight (LoS) and a high Signal-to-Noise Ratio (SNR) [1], [2]. In low-cost embedded systems, a standard Light Emitting Diode (LED) paired with a Light Dependent Resistor (LDR) is commonly used to demonstrate data transfer. However, ambient environmental lighting introduces a severe DC bias into the receiver, and LDRs exhibit significant photoconductive latency [3]. The novelty of this paper lies in its evolutionary approach to solving physical layer limitations, building upon foundational On-Off Keying (OOK) optical paradigms [4]. We first establish a baseline VLC system to document hardware-induced signal degradation, known as the "Iceberg Effect." Following this, we introduce an advanced Infrared (IR) iteration utilizing the Stepwise Derivative Method (SDM)—a software-defined algorithm that tracks the environmental noise floor [5]. Finally, to overcome severe outdoor solar interference [6], we introduce a Goertzel algorithm-based digital signal processing (DSP) approach, effectively turning a low-cost microcontroller into a software-defined radio for optical frequencies.

A. Related Works and Novelty

Standard commercial IR systems avoid ambient noise by utilizing 38kHz Carrier Waves and specialized TSOP receiver modules. While effective, these modules act as "black boxes" that strip the analog signal data away from the microcontroller, preventing custom low-level signal analysis. Conversely, standard unmodulated photodiode circuits use fixed analog thresholds that fail the moment room lighting changes. Our proposed SDM and Goertzel implementations bridge this gap, retaining raw analog sampling while applying dynamic digital filters to reject ambient DC bias. The related block diagram is available in Fig. 1 To ensure reproducibility, the system was tested using

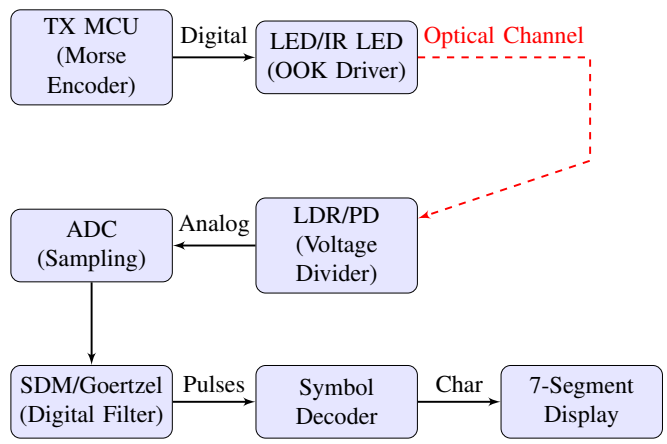

Fig. 1. System Block Diagram detailing the cross-layer flow from hardware transmission to the software-defined filtering and hardware output.

standard off-the-shelf components. The development was split into two hardware profiles as detailed in Table I.

TABLE I
List of Components

Setup	Components
Common	2× Arduino UNO, 2× Breadboards, Jumper Cables
Visible	1× Red LED (5mm), 1× LDR (5mm)
IR	1× 940-nm IR LED, 1× IR Photodiode (Reverse Bias)

B. Baud Rate and Telemetry Applicability

Morse code, utilizing OOK, possesses a fundamentally low baud rate compared to modern digital modulation schemes like UART or QAM. However, for specialized telemetry applications—such as underwater optical communication or low-cost sensor nodes—signal penetration and robustness take precedence over raw speed. The widened tolerance windows used in this paper's decoding logic demonstrate how low baud rate systems can reliably reconstruct highly degraded signals [7].

C. Baseband Morse Encoding

To establish a quantitative baseline for On-Off Keying (OOK) modulation, the system utilizes the standard interna-

tional Morse code protocol. In this telemetry model, the transmitter's digital output pin toggles between a HIGH (active) and LOW (idle) state to construct characters.

The protocol defines all signal durations relative to a single base time unit (T_u), which in our experimental setup is set to 200 ms. The strict timing rules governing this variable-length baseband modulation are detailed in Table II.

TABLE II
STANDARD MORSE PROTOCOL TIMINGS ($T_u = 200$ MS)

Protocol Element	Logic State	Duration
Dot (Dit)	HIGH (ON)	1 T_u (200 ms)
Dash (Dah)	HIGH (ON)	3 T_u (600 ms)
Intra-character gap	LOW (OFF)	1 T_u (200 ms)
Inter-character gap	LOW (OFF)	3 T_u (600 ms)
Inter-word gap	LOW (OFF)	7 T_u (1400 ms)

This baseband square wave serves as the fundamental logic envelope for all subsequent experimental phases. A visual representation of these timing constraints is illustrated in Fig. 2 for the transmission of the word "AN".

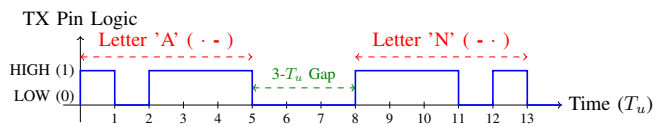

Fig. 2. Baseband OOK transmission waveform for the word "AN", illustrating the strict 1:3 timing ratio of standard Morse protocol.

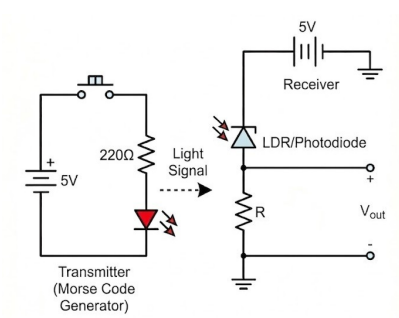

Fig. 3. Circuit Diagram

II. VISIBLE LIGHT BASELINE

A. Circuit Implementation

The baseline system operates entirely in the visible spectrum.

- Transmitter (TX): An Arduino microcontroller drives a standard visible LED. The LED's anode connects to Digital Pin 5, while the cathode is grounded through a 220Ω current-limiting resistor.
- Receiver (RX): The optical sensor is a Light Dependent Resistor (LDR) arranged in a voltage divider. The 5V supply is connected to one leg of the LDR. The secondary leg connects to the Arduino's Analog Pin A0 and a 10kΩ pull-down resistor connected to ground.

B. Hardware Latency and The "Iceberg Effect"

When bridging analog optical sensing and digital microcontrollers, signal truncation occurs. As shown in Fig. 4, an expected "Dah" signal transmitted for 600ms is detected for a fraction of that time. LDRs exhibit notable rise/fall latency, resulting in a trapezoidal curve. To counteract this, our receiver employs widened tolerance windows as listed in Table III.

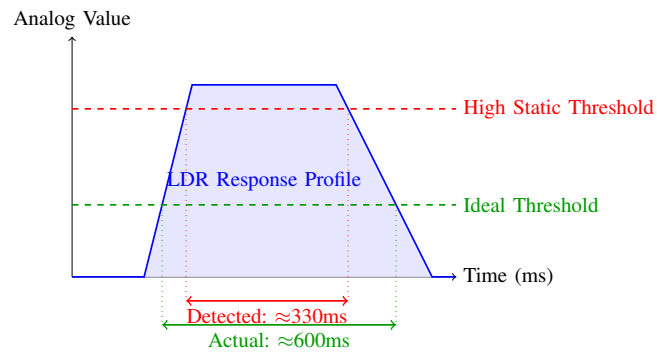

Fig. 4. The "Iceberg Effect" illustrating temporal truncation caused by improper static thresholding of an LDR signal.

TABLE III
ADAPTIVE MORSE PROTOCOL TIMINGS TO COMBAT "ICEBERG EFFECT"

Protocol Element	Logic State	Duration
Dot (Dit)	HIGH (ON)	150 ms
Dash (Dah)	HIGH (ON)	450 ms
Intra-character gap	LOW (OFF)	350 ms
Inter-character gap	LOW (OFF)	750 ms
Inter-word gap	LOW (OFF)	1600 ms

C. Visible Light Results

The baseline system achieved a maximum reliable transmission distance of only 11-12 cm in room light, and 27 cm in total darkness.

III. INFRARED EVOLUTION AND SDM

A. Circuit Implementation

To resolve the noise and range issues of the baseline VLC system, the physical layer was upgraded to a 940-nm Infrared (IR) ecosystem.

- Transmitter (TX): The visible LED is replaced by an IR LED.
- Receiver (RX) Sensor: A high-speed IR photodiode replaces the LDR, operating in reverse-bias mode. The cathode connects to 5V, and the anode connects to Analog Pin A0 and a pull-down load resistor (R_L) to ground.

B. Hardware Impedance and Range Comparison

To highlight the impact of hardware impedance on signal recovery, Table IV compares the maximum reliable transmission distances across the initial configurations. The visible light baseline (LDR) failed abruptly at 27 cm using a 10kΩ pull-down resistor. Transitioning to an unoptimized IR setup with

the same 10kΩ load yielded only a marginal improvement to approximately 50 cm (47 cm). However, by upgrading the load resistor to 1MΩ, the optimized IR-SDM setup successfully extended the range to nearly 2 meters (157 cm) indoors. Frequency-Modulated IR (discussed in Section IV) maintained this performance with slightly better robustness.

TABLE IV
MAXIMUM RELIABLE DISTANCE VS. LOAD RESISTANCE

Configuration	Load Resistor (R_L)	Maximum Range
Visible Light (LDR)	10 kΩ	27 cm
Baseband IR	10 kΩ	≈ 50 cm (47 cm)
Baseband IR	1 MΩ	≈ 2 m (157 cm)
Frequency-Modulated IR	1 MΩ	> 2 m (Slightly better)

C. Hardware Optimization and SDM

Operating in reverse-bias, the photodiode produces a photocurrent (I_{pd}) proportional to the incident photon flux; consequently, the voltage sampled by the ADC is governed by $V_{adc} = I_{pd} \times R_L$. By increasing R_L from 10kΩ to 1MΩ, sensitivity was maximized, extending the raw range to 1.57 meters indoors.

To isolate transmission pulses from fluctuating indoor IR noise, we developed the Stepwise Derivative Method (SDM). The core challenge is that the "dark" voltage of a photodiode is not zero; it is a floating DC offset that changes as room lights are toggled. To address this, the algorithm first calculates a moving average to capture the slow-moving ambient noise floor. This part of the algorithm functions inherently as a low-pass filter:

$$V_{noise}[n] = \frac{1}{N} \sum_{i=0}^{N-1} V_{adc}[n-i] \tag{1}$$

The SDM achieves its adaptive high-pass characteristics by subtracting this low-frequency baseline from the raw instantaneous sampled voltage. This derivative-like operation ignores the steady-state DC bias and extracts only the sudden, high-frequency voltage "steps" caused by the transmitter:

$$V_{signal}[n] = V_{adc}[n] - V_{noise}[n] \tag{2}$$

The final detection threshold is then defined dynamically above the noise floor:

$$V_{threshold}[n] = V_{noise}[n] + \sigma \tag{3}$$

Where σ is a static signal margin constant. This ensures the "Detection Zone" floats above the noise floor, maintaining a constant sensitivity regardless of ambient brightness.

D. SDM Initialization and Training Sequence

Because the rolling buffer requires a stabilization period to accurately map the ambient noise floor, the system mandates an initialization phase prior to data transmission. During this phase, a known training sequence—the phrase "HELLO WORLD"—is transmitted 10 times.

Based on the timing ratios defined in Table II, a single transmission of "HELLO WORLD" consumes exactly 111 T_u (inclusive of all intra-character, inter-character, and inter-word gaps). Therefore, the full 10-cycle training sequence spans 1110 T_u. Given our baseline $T_u = 200$ ms, this equates to a deliberate 222-second pre-transmission window. This ensures the SDM buffer (V_{noise}) fully saturates with representative environmental data, allowing the dynamic noise margin to settle completely before the receiver attempts to decode unknown payload characters.

IV. FREQUENCY MODULATION AND SOFTWARE-DEFINED FILTERING

A. Limitations in Direct Sunlight and Hardware Gain Control

While the initial IR setup successfully mitigated indoor noise, it typically fails in direct sunlight. The sun acts as a high-intensity IR emitter, causing the photodiode to produce a massive steady-state photocurrent. This threatens to saturate the 10-bit ADC at a constant 1023, effectively "blinding" the receiver and removing the dynamic range necessary for processing.

To prevent "hard" saturation, the receiver's load resistor (R_L) is decreased (e.g., from 1MΩ to 10kΩ) when operating outdoors. While this keeps the DC component within the ADC's measurable range, it significantly reduces the signal-to-noise ratio (SNR), as the intentional AC pulses become minute fluctuations on a massive DC floor. This necessitates a transition to a frequency-domain detection approach to isolate the signal.

By reducing R_L, we trade off raw voltage swing for headroom, relying on the high-gain nature of the Goertzel algorithm to recover the attenuated signal from the resulting narrow dynamic range.

B. 2 kHz On-Off Keying (OOK) Modulation

To resolve solar saturation, we transition to a Software-Defined Optical paradigm. Instead of a static DC pulse, the transmitter modulates the IR LED with a 2 kHz square wave carrier during every Morse "mark" (dit or dah).

This process, acting as a form of subcarrier modulation, involves gating the continuous DC transmission pulse with a high-frequency sequence. By toggling the LED at 2 kHz (a 50% duty cycle), we effectively perform a frequency-domain shift:

- **DC Offset (Sun):** The solar interference resides at 0Hz.
- **Data Signal:** The intentional Morse pulses are now "nested" inside a 2000Hz carrier.

This separation allows the receiver to ignore the saturated 0Hz baseline and focus entirely on the energy oscillating at the

target frequency band. This is implemented in software using the `tone()` function, which leverages the microcontroller's internal timers to generate a precise square wave.
Furthermore, operating the LED at a 50% duty cycle reduces the active transmission power consumption by half compared to the continuous DC pulses observed during the Baseband IR, highly benefiting battery-constrained remote sensor nodes.

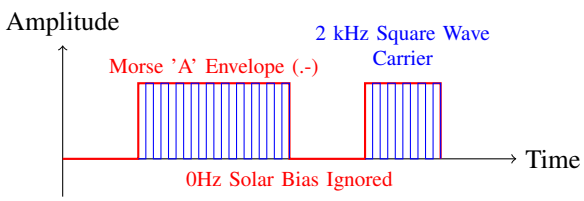

Fig. 5. Modulation: The logic envelope acts as a gate for the 2 kHz square wave. This subcarrier modulation enables frequency-selective filtering at the receiver.

C. Sampling and Goertzel Digital Signal Processing

To detect the 2 kHz carrier without external hardware filters, the receiver's ADC must satisfy the Nyquist theorem (requiring a minimum sampling rate of 4kHz). We modify the `ADCSRA` register to change the prescaler from 128 to 16, accelerating the sampling rate from $\approx$ 10kHz to $\approx$ 60kHz, which provides massive oversampling for high-resolution frequency detection.

We then implement the Goertzel algorithm [8] to act as a digital bandpass filter. Unlike a full Fast Fourier Transform (FFT), the Goertzel algorithm is computationally optimized to calculate the magnitude of a single target frequency (f_{target} = 2000Hz), making it ideal for the limited memory of microcontrollers [9].

During the real-time loop, the system updates a second-order Infinite Impulse Response (IIR) filter state:

$$s[n] = x[n] + \left(2\cos\left(\frac{2\pi k}{N}\right) \cdot s[n-1]\right) - s[n-2] \quad (4)$$

After $N = 80$ samples (which takes approximately 1.33 ms to process at 60 kHz), the squared magnitude M^2 is evaluated. Because DC sunlight (0Hz) and 120Hz indoor flicker do not resonate with the pre-computed coefficient, their resultant magnitude approaches zero. This effectively neutralizes the moving noise floor that required adaptive SDM in IR, allowing Frequency-Modulated IR to utilize a highly reliable static magnitude threshold to "see" the 2 kHz flashes even through a saturated DC bias.

The efficacy of this software-defined approach is evidenced by the raw sampled data. In direct sunlight, the ambient DC floor may occupy $\approx 90\%$ of the ADC range (e.g., a baseline of $\approx$ 950), while the 2 kHz carrier oscillates with a peak-to-peak amplitude of only ± 15 units. Traditional thresholding (SDM) fails in this context because environmental noise fluctuations often exceed the signal amplitude. However, because the Goertzel algorithm concentrates the signal energy into a single frequency bin, it produces a high-magnitude resonance that is easily distinguishable from the DC solar offset and 120Hz artificial lighting flicker, allowing for a reliable static magnitude threshold.

V. Experimental Results

A. Throughput and Bitrate Analysis

We evaluated the efficiency of the three methods by transmitting a 44-byte (352-bit) test sentence. While the VLC setup required slower custom timings (101.8s) to account for photo-conductive latency, the transition to standard Morse timing in IR and Frequency-Modulated IR communication significantly improved throughput. Because Morse code utilizes variable-length OOK encoding, instantaneous throughput fluctuates based on character transmission length. A 44-byte pangram was explicitly chosen as the test payload to force the transmission of all alphabet symbol variants, thereby providing a normalized, worst-case representative average for system bitrate.

TABLE V
System Performance Comparison (44-Byte Sentence)

Receiver Mode of Communication	Time (s)	Bitrate (bps)	Environment
Visible Light	101.8	3.46	Dark/Indoor only
Baseband IR	81.4	4.32	Indoor (Non-Solar)
Frequency-Modulated IR	81.4	4.32	**Direct Sunlight**

As shown in Table V, Frequency-Modulated IR maintains the peak bitrate of 4.32 bps even in high-solar environments where VLC and Baseband IR systems experience complete signal saturation and $< 10\%$ decoding accuracy.

B. Range Analysis

The integration of impedance-tuned hardware with software-defined filtering yielded profound improvements. As illustrated in Fig. 6, the visible light baseline failed abruptly at 27 cm. The unoptimized IR setup (10kΩ) reached 47 cm. The fully optimized IR-SDM setup (1MΩ) successfully maintained 100% decoding accuracy up to 157 cm indoors. Decoding accuracy was empirically measured as the percentage of correctly reconstructed characters from the 44-byte test payload at varying distances.

VI. Conclusion and Future Work

This paper demonstrated a systematic progression in overcoming the physical layer limitations of low-cost optical wireless communication. By evolving from basic visible light sensing to an adaptive Infrared system, we mitigated photo-conductive latency and indoor thermal noise. By shifting the complexity from hardware to a software-defined paradigm—utilizing 2 kHz OOK modulation and an optimized Goertzel digital filter—the system successfully maintained 100% decoding accuracy at ranges up to 2m, even under direct solar interference. This "virtual filter" approach highlights the potential for low-power microcontrollers to perform sophisticated signal recovery in high-noise environments without requiring specialized commercial hardware. Future work will

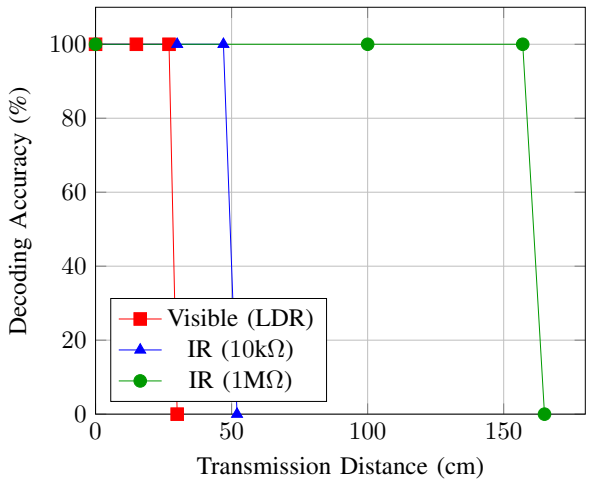

Fig. 6. Comparative analysis of decoding accuracy over distance across the configurations.

explore increasing the baud rate by optimizing the Goertzel block size N for higher-speed telemetry.

References

[1] H. Elgala, R. Mesleh, and H. Haas, "Indoor optical wireless communication: potential and state-of-the-art," *IEEE Communications Magazine*, vol. 49, no. 9, pp. 56–62, Sep 2011.

[2] Z. Ghassemlooy, W. Popoola, and S. Rajbhandari, *Optical Wireless Communications: System and Channel Modelling with MATLAB*. Boca Raton, FL, USA: CRC Press, 2012.

[3] A. Sewaiwar, S. V. Tiwari, and Y. Chung, "Smart led-based ambient light adaptive vlc system," *Optics Express*, vol. 23, no. 19, pp. 24 456–24 465, 2015.

[4] T. Komine and M. Nakagawa, "Fundamental analysis for visible-light communication system using led lights," *IEEE Transactions on Consumer Electronics*, vol. 50, no. 1, pp. 100–107, Feb 2004.

[5] R. J. Green, H. Joshi, M. D. Higgins, and M. S. Leeson, "Adaptive thresholding for optical wireless receivers," *IEE Proceedings - Optoelectronics*, vol. 152, no. 6, pp. 317–321, Dec 2005.

[6] S. Rajagopal, R. D. Roberts, and S.-K. Lim, "Ieee 802.15.7 visible light communication: modulation schemes and dimming support," *IEEE Communications Magazine*, vol. 50, no. 3, pp. 72–82, Mar 2012.

[7] M. Uysal, F. Miramirkhani, T. Baykas, and K. Qaraqe, "Visible light communication for vehicular networking: Performance study of a v2v system using a low-complexity receiver," *IEEE Vehicular Technology Magazine*, vol. 10, no. 4, pp. 71–79, Dec 2015.

[8] S. W. Smith, *The Scientist and Engineer's Guide to Digital Signal Processing*. San Diego, CA, USA: California Technical Publishing, 1997.

[9] S. K. Mitra, *Digital Signal Processing: A Computer-Based Approach*, 3rd ed. New York, NY, USA: McGraw-Hill, 2006.

Appendix A
Visible Light Source Code

Appendix B
Infrared SDM Implementation

Appendix C
Software-Defined High-Solar Ecosystem