A Mobile Phone based Voice-Controlled UGV

Divyansh Maheshwari, Shriyansh Chawda and GVV Sharma
Department of Electrical Engineering
Indian Institute of Technology, Hyderabad
Kandi, India 502284
gadepall@ee.iith.ac.in

***Abstract*—This paper implements a cloud-free voice-controlled Unmanned Ground Vehicle (UGV), consisting of a simple speech recognition engine and microcontroller based mobility. The novelty of this work lies in the fact that all voice commands are processed on an Android smartphone where all speech recognition algorithms are implemented. The key algorithms used are Mel-Frequency Cepstral Coefficient (MFCC) features combined with Dynamic Time Warping (DTW). User adaptation is supported through up to ten recorded templates per command, achieving 90–95% accuracy across 10 speakers and demonstrating language-agnostic operation in English, Hindi, Gujarati, and Tamil.**

***Index Terms*—UGV, voice control, MFCC, DTW, ESP32, BLE, Android, speech recognition**

I. Introduction

Speech-based control removes the need for physical controllers and lowers the barrier for non-expert operation of ground robots. Most prior implementations use recognition to cloud automatic speech recognition (ASR) services [1], which introduces round-trip latency and ties the system to network availability. Running a full speech model on the robot microcontroller directly is equally impractical: a device such as the ESP32 carries insufficient flash and RAM for any modern recogniser.

This paper resolves the compute–connectivity dilemma by offloading all recognition to the Android smartphone that the operator already carries. Short utterances are converted to MFCC feature matrices [2] and matched against stored templates using DTW [3]. Both steps run entirely on the phone, so no audio ever leaves the device. Neural keyword-spotting alternatives exist for microcontrollers [4], [5] but demand labelled training corpora and quantisation pipelines that a DTW system avoids entirely. A 7-byte bluetooth low energy (BLE) command string is transmitted to the ESP32 only after a match is confirmed, reducing the wireless payload by over 99% compared to streaming raw audio [6].

A. Key Contributons

The specific contributions of this work are

1) A smartphone-resident MFCC+DTW pipeline that operates without any cloud or internet dependency.
2) A Best-of-N template strategy allowing each user to enrol up to ten personal utterances per command for speaker adaptation.

II. System Architecture

A. Hardware Setup

Table I lists the various hardware components for UGV control. Fig. 1 shows the connections between the ESP32 and the UGV motor driver. Table II shows how the motor driver controls UGV mobility.

TABLE I
List of Components

Component	Qty.	Description
Chassis frame	1	Holds all components
Side wheels (DC motors)	2	Drive wheels
Caster wheel	1	Stability and smooth turning
ESP32 dev board	1	Microcontroller + BLE
L293D motor driver IC	1	Drives DC motors
DC motors (TT gear)	2	Propulsion
Breadboard	1	Circuit connections
Jumper wires	11	Electrical connections
Power bank / LiPo	1	Portable power supply
Android phone (API 23+)	1	Recognition + BLE central
Micro-USB / USB-C cable	1	ESP32 flashing

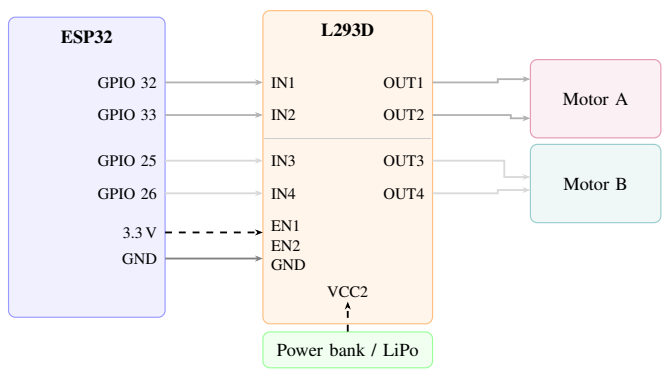

Fig. 1. Wiring schematic: ESP32 to L293D to DC motors.

TABLE II
Motor Direction Truth Table

IN1	IN2	IN3	IN4	Result
H	L	H	L	Move Forward
L	H	L	H	Move Back
L	H	H	L	Turn Left
H	L	L	H	Turn Right
L	L	L	L	Motor Stop

B. Software Overview

Two hardware nodes form the complete system: an Android smartphone that handles all audio capture and recognition, and an ESP32 microcontroller that handles BLE reception and motor actuation. Fig. 2 shows the key functions executed by the smartphone and the ESP32.

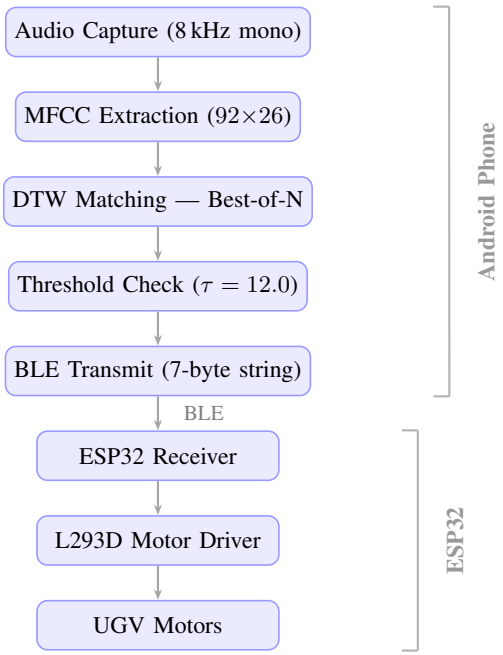

Fig. 2. System pipeline block diagram.

III. Signal Processing

An android app was built using Claude for the following

1) Recording the 5 templates in Table II, 10 samples being recorded for each command. 1.5 s audio was captured at 8 kHz which was converted into a compact 92×26 feature matrix using Mel-Frequency Cepstral Coefficients (MFCC).
2) For voice recognition, the MFCC feature matrix of a spoken query is compared against stored command templates using Dynamic Time Warping (DTW) [3].
3) Transmitting the voice commands to the ESP 32 for vehicle control

The android app details are available in Appendix A. Table III gives concrete guidance on the number of samples to be recorded in various scenarios. Fig. 3 provides the interface available in the android app for recording voice samples and recognizing them.

TABLE III
Recommended Template Count per Scenario

Scenario	Min.	Recommended
Quick prototype, quiet room	1	3–5
Daily driver, single speaker	5	8–10
Noisy environment	8	10
Shared templates across speakers		Not supported

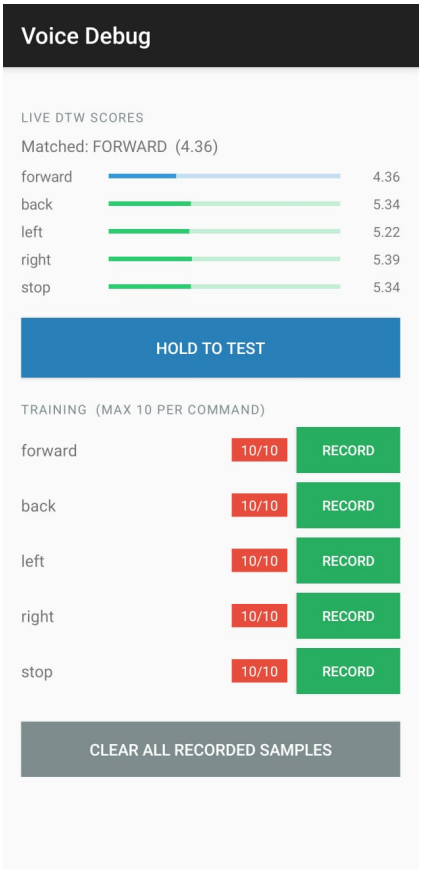

Fig. 3. Debug Activity screen showing live DTW scores after speaking *forward*. The blue bar indicates the winning command (score 4.36), while all other commands score above 5.0. All five commands have 10 recorded templates (10/10), producing well-separated scores and reliable recognition.

A. Threshold Tuning

Picking a good threshold is straightforward with the live score display in the debug screen of the android app. We run several genuine utterances and note the highest DTW score that still matches the correct command; then run a few wrong commands and note the lowest score that correctly rejects them. We then set the threshold anywhere in the gap between those two numbers. In practice, 8–10 personal templates recorded in a quiet room push the correct-command scores down to the 3.0–7.5 range (Table IV), so a threshold of 8.0–10.0 gives comfortable separation for a single speaker.

IV. Vehicle Control

A. ESP32 Firmware

Three source files make up the firmware, built with PlatformIO on the Arduino framework.

ble_receive.cpp sets up a BLE GATT server with a WRITE characteristic (`UUID: ...9002`) for incoming command strings and a NOTIFY characteristic (`UUID: ...9003`) for acknowledgements. Any string not matching the five known commands is discarded. Advertising for new connection restarts automatically on disconnect.

motor.cpp toggles four GPIO pins (32, 33, 25, 26) to drive the L293D. No PWM is used.

main.cpp implements the command dispatcher:

forward and *back* run until a *stop* is received. *left* and *right* run for 600 ms then auto-stop, giving approximately a 90°turn. The duration is adjustable for different chassis. All of these codes are available at

```
\url{https://github.com/gadepall/voice-ugv/tree/main
    /codes/esp32_side/src}
```

B. Turn Duration

Lateral movement is timed rather than angle-sensed: `main.cpp` holds the turn GPIO pattern for 600 ms before issuing a stop, which yields roughly 90°on the development chassis at full motor voltage. Heavier or slower builds need a longer delay; faster or lighter ones need a shorter one. The constant is a single integer literal in `main.cpp` and requires no recompilation of any Android code.

V. Results and Discussion

A. Multi-Speaker Evaluation

Ten volunteers each recorded 10 templates per command through the in-app training interface, then independently spoke each command multiple times in a quiet indoor room. Across all speakers and all five commands the system maintained **90–95%** accuracy, as broken down in Table IV.

TABLE IV
Typical DTW Scores (single speaker, quiet environment)

Condition	Score Range	Outcome
Correct command, 10 templates	3.0 – 7.5	Match ($< \tau$)
Correct command, 1 template	5.0 – 11.0	Match / borderline
Wrong command	11.0 – 22.0	No match ($> \tau$)
Silent / noise	18.0 – 30.0	No match

DTW is fundamentally a speaker-dependent algorithm, so achieving this accuracy across 10 different voices warrants explanation. Two mechanisms are responsible. First, CMVN subtracts the per-coefficient mean and divides by the standard deviation computed over the 92-frame window, stripping out slow-varying spectral biases that differ between speakers. Second, the Best-of-N rule picks the single closest template out of up to 10 stored ones, so each user's personal recordings effectively anchor the matcher to their own vocal characteristics.

B. Cross-Language Evaluation

A subset of participants issued commands in **Hindi, Gujarati, and Tamil** rather than English. Accuracy stayed within the 90–95% band across all three languages. No changes to the pipeline were needed: because `MFCCProcessor` works on raw acoustic energy and `DTWMatcher` compares 26-dimensional frame vectors, the system carries no phoneme tables, pronunciation dictionaries, or language models that would tie it to a specific language. Any consistently pronounced word maps to a repeatable MFCC trajectory and can therefore serve as a command.

C. Limitations

Each new speaker must record their own templates; there is currently no speaker-independent enrolment path. In noisy settings the `NoiseSuppressor` API offers some relief but does not fully recover accuracy. On the ESP32 side, the 600 ms fixed turn timer is a heuristic — it produces approximately 90°on the test chassis but needs manual adjustment for any build with different motor speed or chassis weight. Addressing all three points — speaker independence, noise robustness, and closed-loop turning — is left to future work.

VI. Conclusions

Relocating MFCC extraction and DTW matching from the ESP32 to an Android smartphone produces a fully on-device, cloud-free voice control system for a UGV. CMVN normalisation and the Best-of-N template strategy together yield 90–95% accuracy across 10 speakers and four languages — English, Hindi, Gujarati, and Tamil — despite DTW being inherently speaker-dependent.

Three limitations remain. Each new speaker must record personal templates, accuracy drops in noisy environments even with Android's `NoiseSuppressor` API active and Turn duration is not same for all UGV builds. Future work will investigate compact convolutional or recurrent keyword-spotting models that run on-device without per-user enrolment, alongside data augmentation for noise robustness and a larger-scale speaker evaluation.

References

[1] G. Li, S. Mei, H. Yang, X. Zhang, H. Wang, and F. Sun, "Speech interaction with robots: A review," *International Journal of Advanced Robotic Systems*, vol. 14, no. 6, 2017.

[2] S. Davis and P. Mermelstein, "Comparison of parametric representations for monosyllabic word recognition in continuously spoken sentences," *IEEE Transactions on Acoustics, Speech, and Signal Processing*, vol. 28, no. 4, pp. 357–366, 1980.

[3] H. Sakoe and S. Chiba, "Dynamic programming algorithm optimization for spoken word recognition," *IEEE Transactions on Acoustics, Speech, and Signal Processing*, vol. 26, no. 1, pp. 43–49, 1978.

[4] Y. Zhang, N. Suda, L. Lai, and V. Chandra, "Hello edge: Keyword spotting on microcontrollers," in *arXiv preprint arXiv:1711.07128*, 2017.

[5] S. Choi, S. Seo, and B. Moon, "An efficient keyword spotting technique using a recurrent neural network for resource-constrained devices," *Applied Sciences*, vol. 9, no. 9, p. 1885, 2019.

[6] K. Mikhaylov and J. Tervonen, "Evaluation of power consumption for Bluetooth Low Energy," in *2013 IEEE 24th Annual International Symposium on Personal, Indoor, and Mobile Radio Communications (PIMRC)*. IEEE, 2013, pp. 155–159.

[7] P. Warden, "Speech commands: A dataset for limited-vocabulary speech recognition," *arXiv preprint arXiv:1804.03209*, 2018.

[8] W. Shi, J. Cao, Q. Zhang, Y. Li, and L. Xu, "Edge computing: Vision and challenges," *IEEE Internet of Things Journal*, vol. 3, no. 5, pp. 637–646, 2016.

[9] A. Maier *et al.*, "Design and implementation of ESP32-based IoT devices," *Sensors*, vol. 23, no. 15, p. 7023, 2023.

[10] J. Gonzalez *et al.*, "Implementation of a speech recognition system in a DSC," *IEEE Latin America Transactions*, vol. 14, no. 6, pp. 2657–2662, 2016.

[11] S. Furui, "Cepstral analysis technique for automatic speaker verification," *IEEE Transactions on Acoustics, Speech, and Signal Processing*, vol. 29, no. 2, pp. 254–272, 1981.

APPENDIX

The git repo for all the codes is

```
https://github.com/gadepall/voice-ugv.git
```

A. ESP32 Firmware

1) **Install PlatformIO.** Install the PlatformIO IDE extension in VS Code, or install the PlatformIO Core CLI via:

```
pip install platformio
```

2) **Clone / extract the project.** Place the `ugv_esp32/` folder on your PC.
3) **Connect the ESP32** to the PC via USB.
4) **Build and flash** the firmware:

```
pio run --target upload
```

PlatformIO automatically installs the `ESP32 BLE Arduino` library declared in `platformio.ini`. After flashing, the ESP32 advertises itself as `ESP32_UGV` over BLE and awaits a connection.

5) **Verify** by opening the serial monitor (`pio device monitor`, 115200 baud) and confirming the message `BLE started, advertising...`.

B. Android Application

Install the pre-built APK:

1) Download `ugv_android.apk` to the Android device.
2) On the device, enable *Settings* → *Security* → *Install unknown apps* for your file manager.
3) Open the APK file and tap *Install*.

A.4 First-Time Setup on the Phone

1) Enable Bluetooth on the Android device.
2) Open the **UGV Controller** app. The *SetupActivity* wizard launches automatically on first run, guiding you through BLE pairing.
3) Tap *Connect to ESP32*. The app scans for a BLE device named `ESP32_UGV` and connects automatically.
4) Follow the on-screen prompts to record 5 templates per command (10 recommended for best accuracy).
5) Tap any command button to issue voice commands. The recognized command and DTW score are shown on the main screen; detailed per-command scores are available in the *Debug* screen.

A.5 Troubleshooting

- **AudioRecord failed:** A 200 ms delay is already applied between recordings. If the error persists, close other apps using the microphone.
- **BLE not connecting:** Ensure the ESP32 is powered and advertising (`ESP32_UGV` appears in a BLE scanner app). Force-stop the UGV app and reconnect.
- **Poor recognition accuracy:** Record additional templates in a quiet environment. Reduce the threshold τ in `DTWMatcher.java` if valid commands are being rejected.

C. Android Application Working

The app captures 1.5 s of audio at 8 kHz mono (16-bit PCM, 24 kB per utterance) using the `AudioRecord` API. The 8 kHz sample rate was chosen deliberately: speech energy is concentrated below 4 kHz, so the Nyquist criterion is satisfied while halving the data volume compared to 16 kHz, directly reducing FFT computation and template storage. All signal processing runs on a background thread to keep the UI responsive; results are posted back to the UI thread on completion. A 200 ms pause before each `AudioRecord` initialisation prevents microphone release errors on back-to-back recordings.

When a match is confirmed (score $< \tau$), a 7-byte ASCII command string is written to the BLE GATT characteristic (`UUID: ...9002`), reducing the wireless payload by over 99% compared to streaming raw PCM. The ESP32 acknowledges receipt via a NOTIFY characteristic (`UUID: ...9003`), completing the control loop.

The app provides three screens. The *Main* screen presents five command buttons with live recognition feedback after each utterance. The *Debug* screen (Fig. 3) displays per-command DTW scores as a live bar chart, enabling the user to tune τ by observing the separation between correct and incorrect command scores. The *Training* screen lets users record up to 10 templates per command, showing per-command slot counters (e.g. 7/10) to track enrolment progress.

Flashing the firmware and installing the APK is all that is required. The app scans for a BLE device named `ESP32_UGV` and connects automatically. Once paired, the user speaks a command and the vehicle responds within approximately 1.6 s.