F1 STEERING MODULE

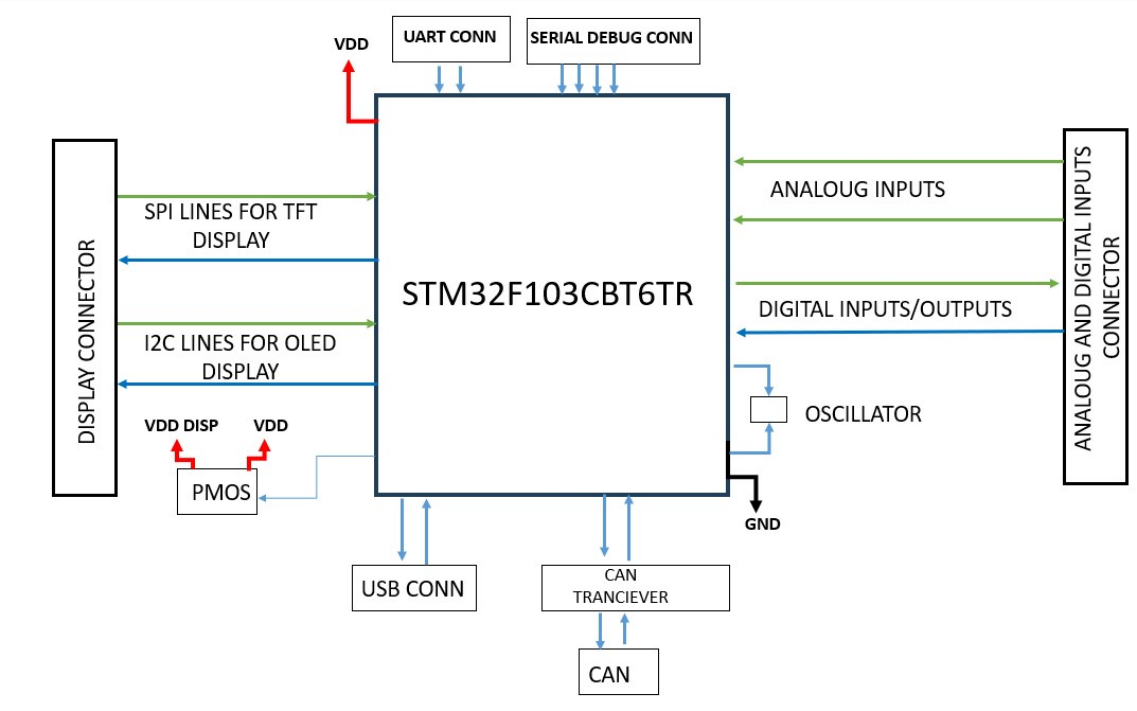

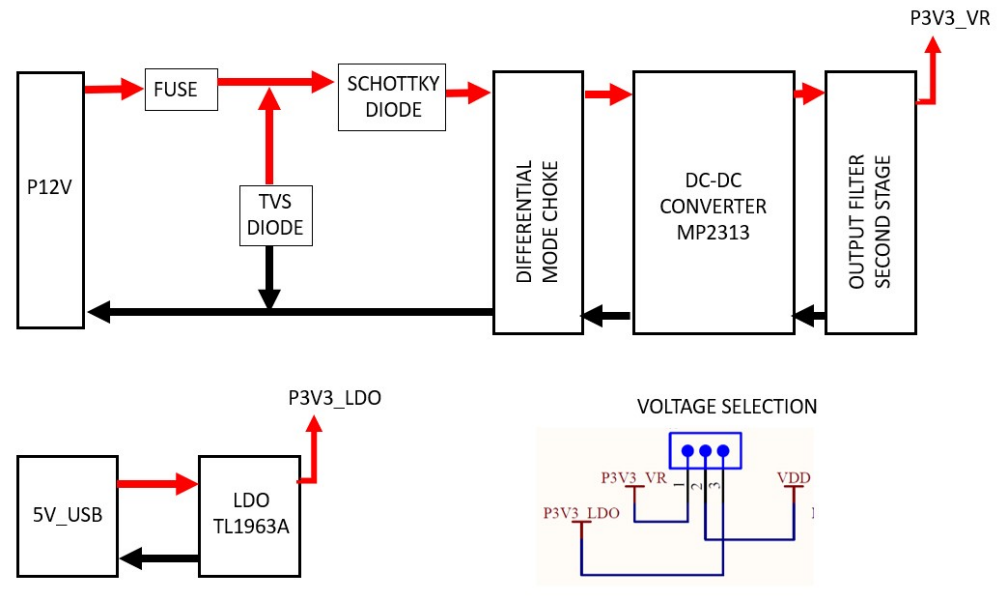

Size	Number	Revision
A		
Date: 11/20/2025		Sheet of
File: C:\Users\..\BLOCK_DIAGRAM.SchDoc		Drawn By:

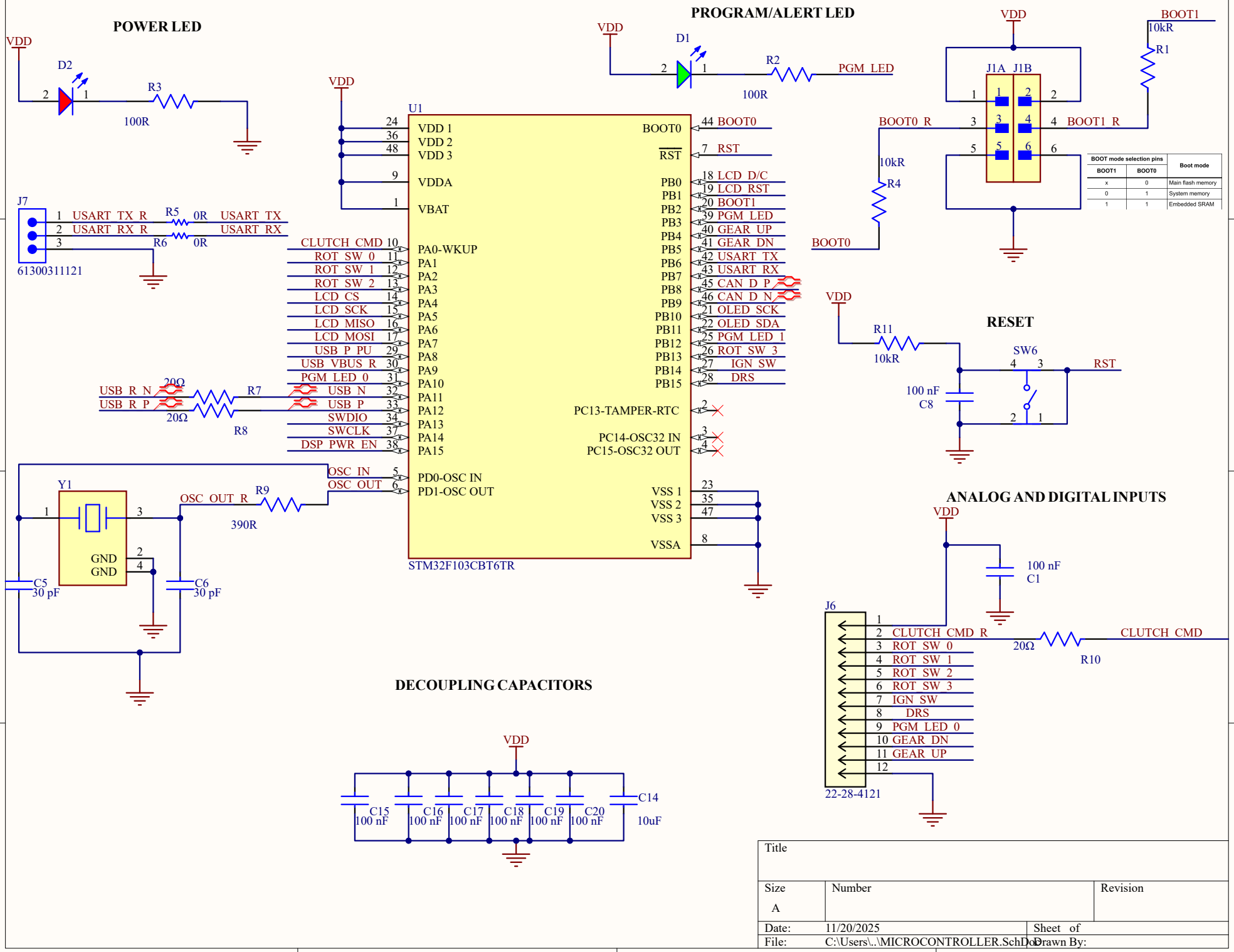
POWER LED
VDD
D2
R3
100R
PROGRAM/ALERT LED
D1
R2
PGM_LED
100R
U1
STM32F103CBT6TR
VDD 1
VDD 2
VDD 3
VDDA
VBAT
PA0-WKUP
PA1
PA2
PA3
PA4
PA5
PA6
PA7
PA8
PA9
PA10
PA11
PA12
PA13
PA14
PA15
PD0-OSC IN
PD1-OSC OUT
BOOT0
RST
PB0
PB1
PB2
PB3
PB4
PB5
PB6
PB7
PB8
PB9
PB10
PB11
PB12
PB13
PB14
PB15
PC13-TAMPER-RTC
PC14-OSC32 IN
PC15-OSC32 OUT
VSS 1
VSS 2
VSS 3
VSSA
CLUTCH_CMD
ROT_SW_0
ROT_SW_1
ROT_SW_2
LCD_CS
LCD_SCK
LCD_MISO
LCD_MOSI
USB_P_PU
USB_VBUS_R
PGM_LED_0
USB_N
USB_P
SWDIO
SWCLK
DSP_PWR_EN
LCD_D/C
LCD_RST
BOOT1
PGM_LED
GEAR_UP
GEAR_DN
USART_TX
USART_RX
CAN_D_P
CAN_D_N
OLED_SCK
OLED_SDA
PGM_LED_1
ROT_SW_3
IGN_SW
DRS
J7
61300311121
USART_TX_R
USART_RX_R
R5
R6
0R
USART_TX
USART_RX
USB_R_N
USB_R_P
20Ω
R7
R8
Y1
GND
GND
OSC_IN
OSC_OUT
OSC_OUT_R
R9
390R
C5
30 pF
C6
30 pF
BOOT0_R
BOOT1_R
10kR
R4
R1
J1A
J1B
BOOT mode selection pins
BOOT1
BOOT0
Boot mode
x
0
Main flash memory
0
1
System memory
1
1
Embedded SRAM
RESET
R11
10kR
SW6
RST
100 nF
C8
ANALOG AND DIGITAL INPUTS
100 nF
C1
J6
CLUTCH_CMD_R
CLUTCH_CMD
20Ω
R10
22-28-4121
DECOUPLING CAPACITORS
C15
100 nF
C16
100 nF
C17
100 nF
C18
100 nF
C19
100 nF
C20
100 nF
C14
10uF
Title
Size
A
Number
Revision
Date:
11/20/2025
Sheet of
File:
C:\Users\..\MICROCONTROLLER.SchDoc
Drawn By:

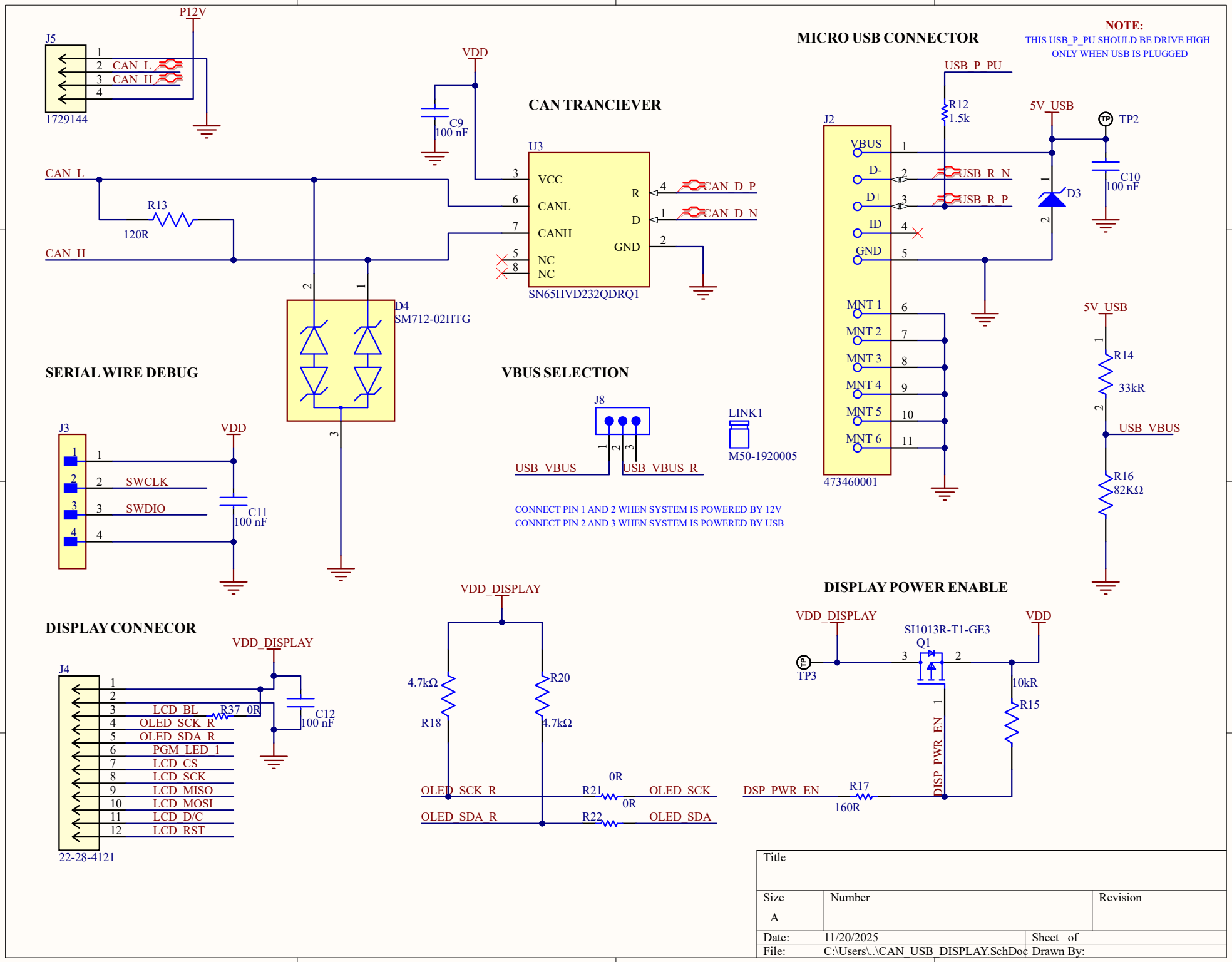
J5
P12V
CAN_L
CAN_H
1729144
VDD
C9
100 nF
CAN TRANCIEVER
U3
VCC
CANL
CANH
NC
NC
R
D
GND
CAN_D_P
CAN_D_N
SN65HVD232QDRQ1
R13
120R
D4
SM712-02HTG
MICRO USB CONNECTOR
NOTE:
THIS USB_P_PU SHOULD BE DRIVE HIGH
ONLY WHEN USB IS PLUGGED
USB_P_PU
R12
1.5k
5V_USB
TP2
J2
VBUS
D-
D+
ID
GND
USB_R_N
USB_R_P
D3
C10
100 nF
MNT 1
MNT 2
MNT 3
MNT 4
MNT 5
MNT 6
473460001
5V_USB
R14
33kR
USB_VBUS
R16
82KΩ
SERIAL WIRE DEBUG
J3
VDD
SWCLK
SWDIO
C11
100 nF
VBUS SELECTION
J8
USB_VBUS
USB_VBUS_R
LINK1
M50-1920005
CONNECT PIN 1 AND 2 WHEN SYSTEM IS POWERED BY 12V
CONNECT PIN 2 AND 3 WHEN SYSTEM IS POWERED BY USB
DISPLAY CONNECOR
VDD_DISPLAY
J4
LCD_BL
R37 0R
OLED_SCK_R
OLED_SDA_R
PGM_LED_1
LCD_CS
LCD_SCK
LCD_MISO
LCD_MOSI
LCD_D/C
LCD_RST
C12
100 nF
22-28-4121
VDD_DISPLAY
4.7kΩ
R18
R20
4.7kΩ
OLED_SCK_R
R21
0R
OLED_SCK
OLED_SDA_R
R22
0R
OLED_SDA
DISPLAY POWER ENABLE
VDD_DISPLAY
VDD
SI1013R-T1-GE3
Q1
TP3
10kR
R15
DISP_PWR_EN
DSP_PWR_EN
R17
160R
Title
Size
A
Number
Revision
Date:
11/20/2025
Sheet of
File:
C:\Users\..\CAN_USB_DISPLAY.SchDoc
Drawn By:

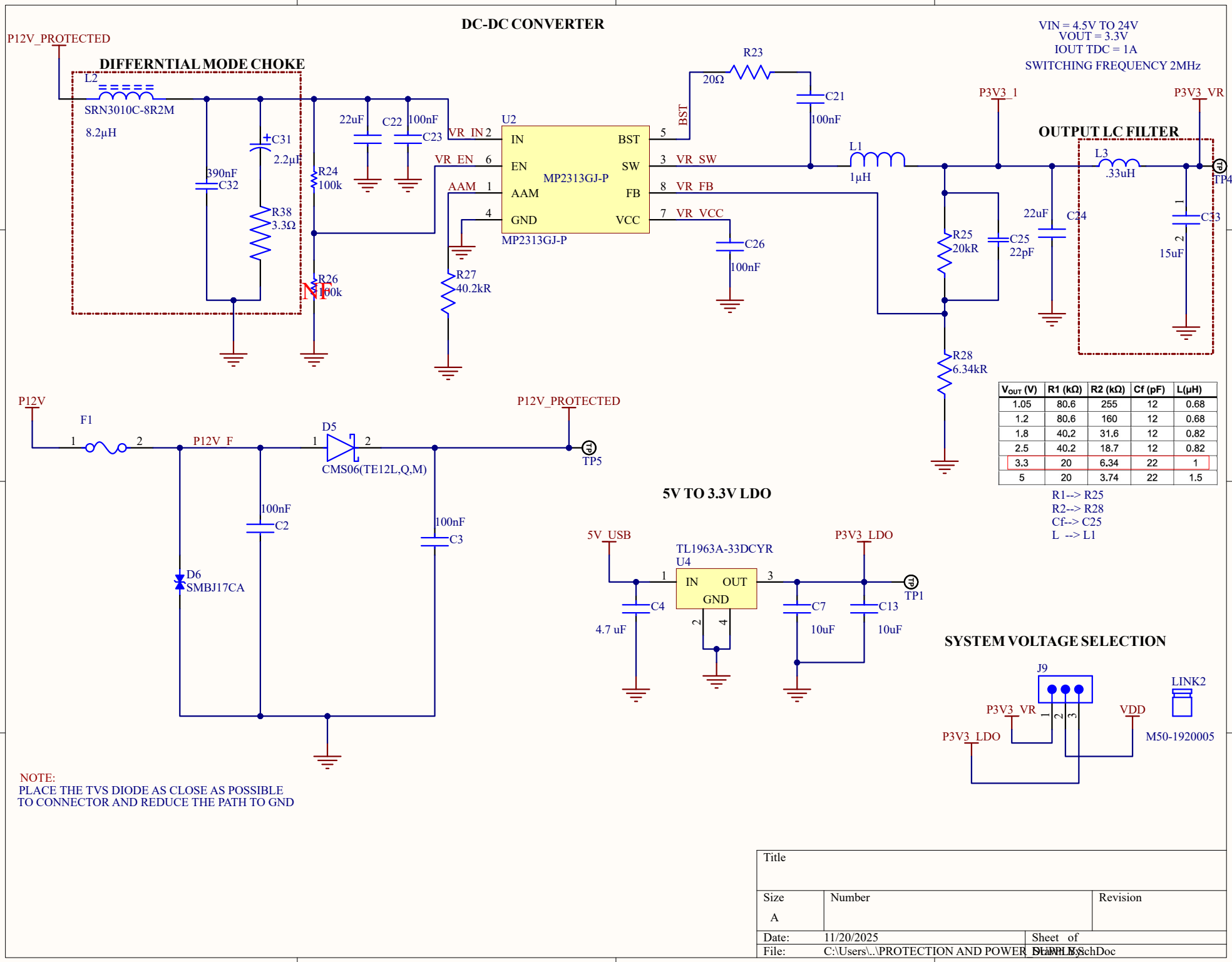

V_{OUT} (V)	R1 (kΩ)	R2 (kΩ)	Cf (pF)	L(µH)
1.05	80.6	255	12	0.68
1.2	80.6	160	12	0.68
1.8	40.2	31.6	12	0.82
2.5	40.2	18.7	12	0.82
3.3	20	6.34	22	1
5	20	3.74	22	1.5

R1--> R25
R2--> R28
Cf--> C25
L --> L1