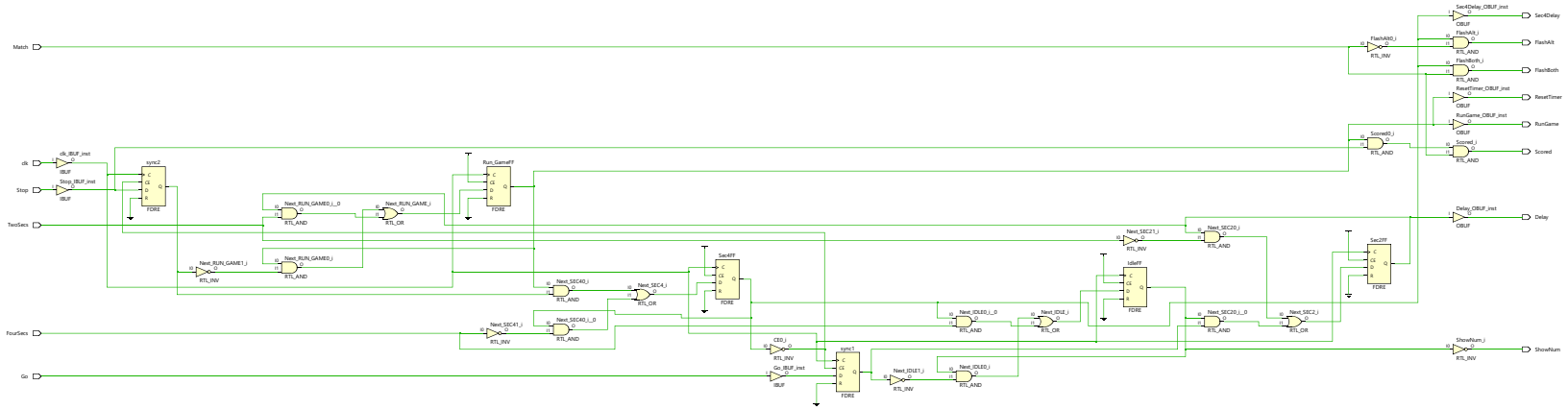
Match
clk
Stop
TwoSecs
FourSecs
Go
clk_IBUF_inst
Stop_IBUF_inst
IBUF
sync2
FDRE
Next_RUN_GAME0_i_0
Next_RUN_GAME_i
Next_RUN_GAME0_i
Next_RUN_GAME1_i
RTL_AND
RTL_OR
RTL_INV
Run_GameFF
Next_SEC40_i
Next_SEC4_i
Next_SEC41_i
Next_SEC40_i_0
Sec4FF
CE0_i
Go_IBUF_inst
sync1
Next_IDLE0_i_0
Next_IDLE_i
Next_IDLE1_i
Next_IDLE0_i
IdleFF
Next_SEC21_i
Next_SEC20_i
Next_SEC20_i_0
Next_SEC2_i
Sec2FF
FlashAlt0_i
FlashAlt_i
FlashBoth_i
ScoredI_i
Scored_i
ShowNum_i
Sec4Delay_OBUF_inst
ResetTimer_OBUF_inst
RunGame_OBUF_inst
Delay_OBUF_inst
OBUF
Sec4Delay
FlashAlt
FlashBoth
ResetTimer
RunGame
Scored
Delay
ShowNum