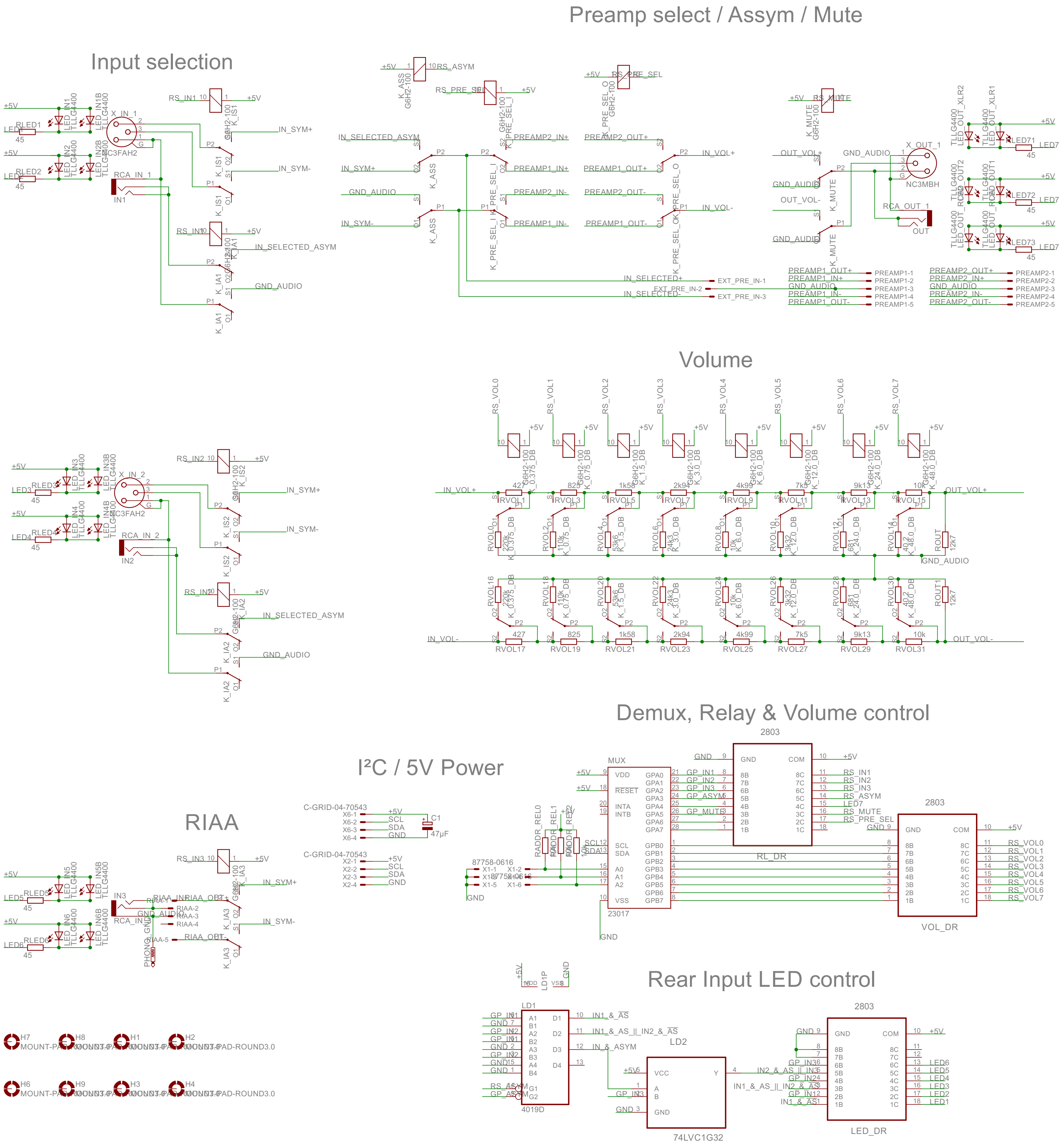
Preamp select / Assym / Mute
Input selection
Volume
Demux, Relay & Volume control
I²C / 5V Power
RIAA
Rear Input LED control
X_IN_1
NC3FAH2
RCA_IN_1
IN1
X_IN_2
RCA_IN_2
IN2
IN3
RCA_IN3
PHONO_GND
RS_IN1
RS_IN2
RS_IN3
K_IS1
K_IA1
K_IS2
K_IA2
K_IA3
G6H2-100
IN_SYM+
IN_SYM-
IN_SELECTED_ASYM
GND_AUDIO
+5V
LED1
LED2
LED3
LED4
LED5
LED6
LED7
TLLG4400
K_ASS
RS_ASYM
RS_PRE_SEL
K_PRE_SEL_I
K_PRE_SEL_O
RS_MUTE
K_MUTE
PREAMP1_IN+
PREAMP1_IN-
PREAMP1_OUT+
PREAMP1_OUT-
PREAMP2_IN+
PREAMP2_IN-
PREAMP2_OUT+
PREAMP2_OUT-
IN_VOL+
IN_VOL-
OUT_VOL+
OUT_VOL-
X_OUT_1
NC3MBH
RCA_OUT_1
OUT
EXT_PRE_IN-1
EXT_PRE_IN-2
EXT_PRE_IN-3
IN_SELECTED+
IN_SELECTED-
RS_VOL0
RS_VOL1
RS_VOL2
RS_VOL3
RS_VOL4
RS_VOL5
RS_VOL6
RS_VOL7
K_0.375_DB
K_0.75_DB
K_1.5_DB
K_3.0_DB
K_6.0_DB
K_12.0_DB
K_24.0_DB
K_48.0_DB
427
825
1k58
2k94
4k99
7k5
9k13
10k
220k
110k
53k6
24k3
10k
3k32
681
402
ROUT
ROUT1
12k7
MUX
23017
VDD
RESET
INTA
INTB
SCL
SDA
VSS
GPA0
GPB0
2803
RL_DR
VOL_DR
LED_DR
GND
COM
RADDR_REL0
RADDR_REL1
RADDR_REL2
87758-0616
C-GRID-04-70543
C1
47µF
SCL
SDA
LD1
4019D
LD2
74LVC1G32
IN1_&_AS
IN1_&_AS_||_IN2_&_AS
IN_&_ASYM
MOUNT-PAD-ROUND3.0
H1
H2
H3
H4
H6
H7
H8
H9

25/12/2014 19:58:26 f=0.58 \\nas\Gael\DIY\eagle\UGS preamp\relay board.sch (Sheet: 1/1)