# “Wireless Two-way Communication E-Menu Food Ordering System”

# INTRODUCTION

- The "Wireless Two-Way Communication E-Menu Food Ordering System" is an innovative solution designed to enhance the dining experience by digitalizing and automating the food ordering process.
- Traditionally, restaurants rely on printed menus and waitstaff to take orders from customers, which can be time-consuming and prone to errors, especially during busy hours.
- This project introduces a modern approach using wireless communication and electronic menus, allowing customers to browse the menu and place orders directly from their table.
- In this system, each table is equipped with a digital device, such as a tablet or a touchscreen interface, displaying an interactive e-menu. The e-menu provides a comprehensive list of food options, complete with descriptions and prices.
- Customers can browse, customize, and place their orders, which are then transmitted wirelessly to the kitchen and billing system. This two-way communication allows for real-time order confirmation, updates on order status, and enables customers to request additional items or services seamlessly.

# Problem Definition

- The main problem in the food service industry is that restaurants cannot achieve efficiency due to the more effective use of technology and automation in daily operations.
- In all restaurants, employees must accept orders, process orders and use traditional menu submission methods.
- Nowadays, the number of restaurants increasing, and they also need very fast processing to provide food to customers.
- As the number of customers increases, since the current situation is crazy for customers, more personnel will be needed. Restaurants/hotels are also unable to change the menu printout at a short time span.

# OBJECTIVES

1. **Enhance Customer Experience**
2. **Improve Order Accuracy**
3. **Optimize Staff Efficiency**
4. **Real-Time Order Updates**
5. **Data Collection for Analytics**
6. **Increase Operational Efficiency**

# Methodology :

## ❖ System Design:

- **Network Topology:** Design a topology where each table is equipped with an RF-enabled e-menu device that communicates with a central RF receiver in the kitchen.
- **Database Design:** Outline a database structure to store menu items, order details, and feedback for real-time processing.
- **Communication Protocol:** Define the message format for data transmission over RF, allowing two-way communication for sending orders and receiving confirmation/status updates.
- Set up displays at each table, such as touchscreen displays, for menu interaction and order placement.
- Ensure proper power sources and connections for all components to operate smoothly within the restaurant's layout.

## ❖ Software Development :

- **E-Menu Interface:** Develop a simple and intuitive e-menu software interface for browsing the menu, selecting items, customizing orders, and sending orders to the kitchen.
- **Microcontroller Programming**: Program microcontrollers to manage the RF module for receiving and transmitting data between tables and the kitchen.
- **Order Management:** Implement software on the kitchen's display or server to receive orders, update status, and send confirmations back to customers.

# Components Required :

- **ESP32 Microcontroller.**

- A **microcontroller module** with featuring a 38-pin layout for flexible connectivity.
- **dual-core Xtensa processor,** ideal for IoT and real-time applications.
- **38 pins :** Power Pins, GPIO Pins, Communication Pins, Touch Pins.
- **Operating Voltage:** 3.3V
- **Flash Memory**: 4MB

- **LM2596 Buck Converter:.**

- **A DC-DC step-down voltage regulator** module designed to convert higher input voltage (4-40V) into a lower adjustable output voltage (1.25-37V).
- **High Efficiency**
- **Adjustable Output**

## 3.2-Inch TFT LCD Display:

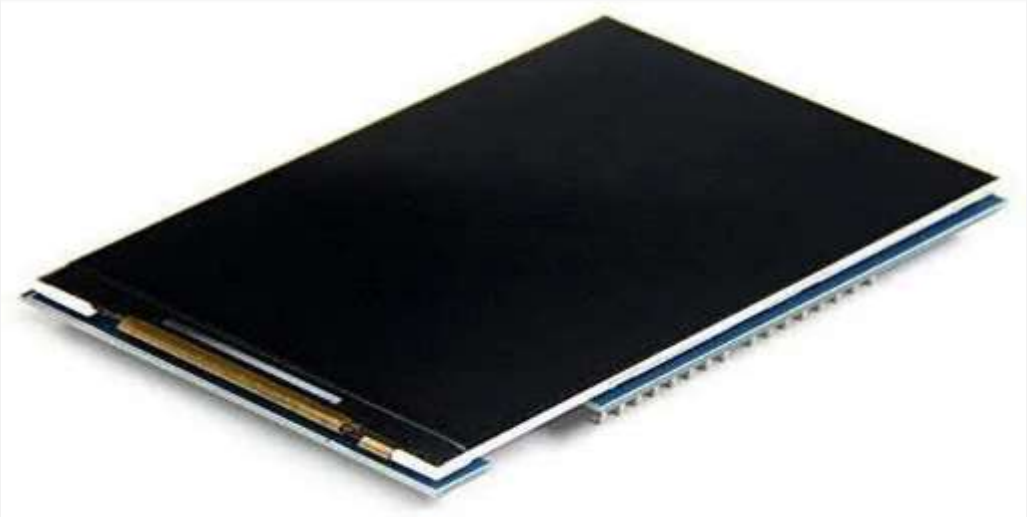

- A vibrant touchscreen module with a 3.2-inch **resistive panel ,** offering a **resolution** of 320x240 pixels for graphical displays.
- **Peripheral Interface (SPI**) for communication with Arduino Mega and other microcontrollers.
- Ideal for creating **interactive projects** like GUIs, control panels

## NRF24L01+PA+LNA Module:

- A 2.4GHz wireless transceiver module with power amplifier (PA) and low-noise amplifier (LNA)
- **Long range** and **improved signal strength.**
- Supports SPI communication, low power consumption

## Lithium Ion Battery :

## Buzzer :

- A **lithium-ion battery** is a rechargeable energy storage device widely used in portable electronics, electric vehicles, and renewable energy systems
- Known for its high energy density, long lifespan, and lightweight design.

# Block Diagram :

**Transmitter Side :**

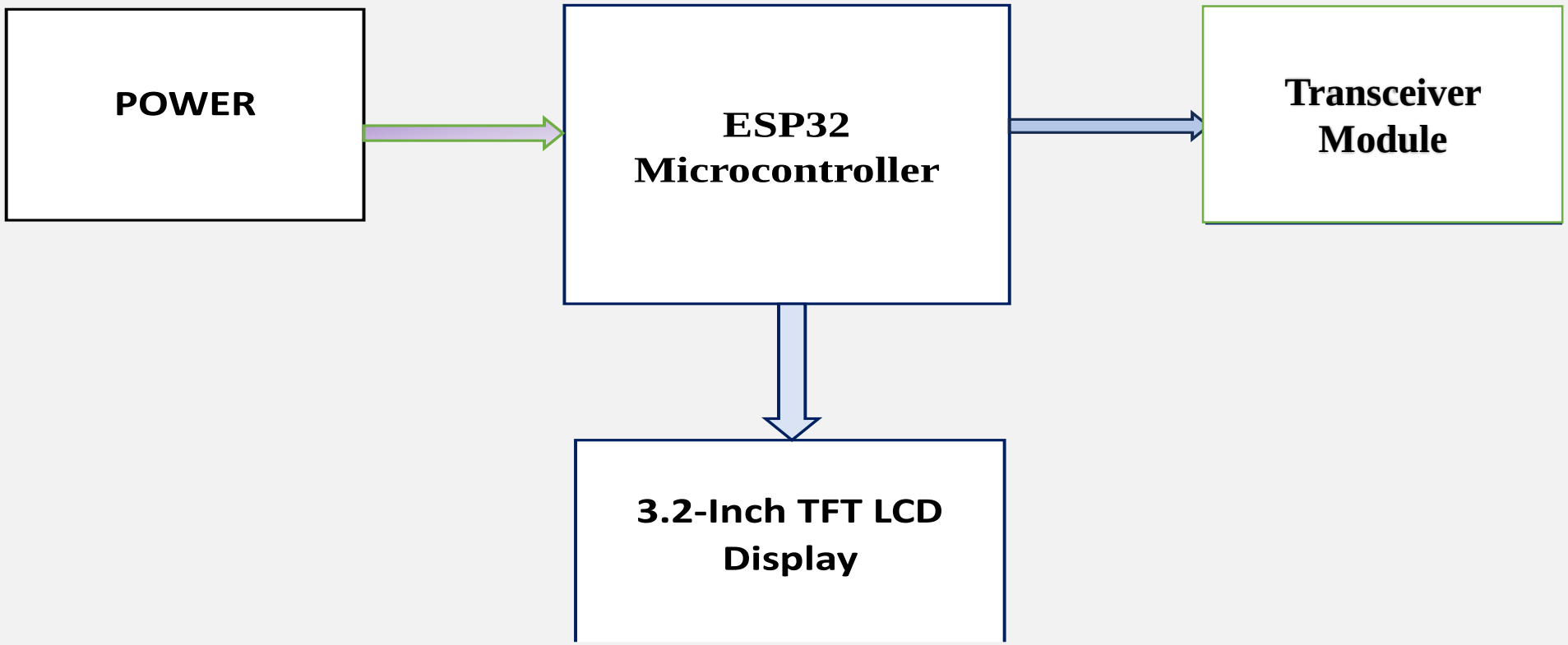

# Receiver Unit

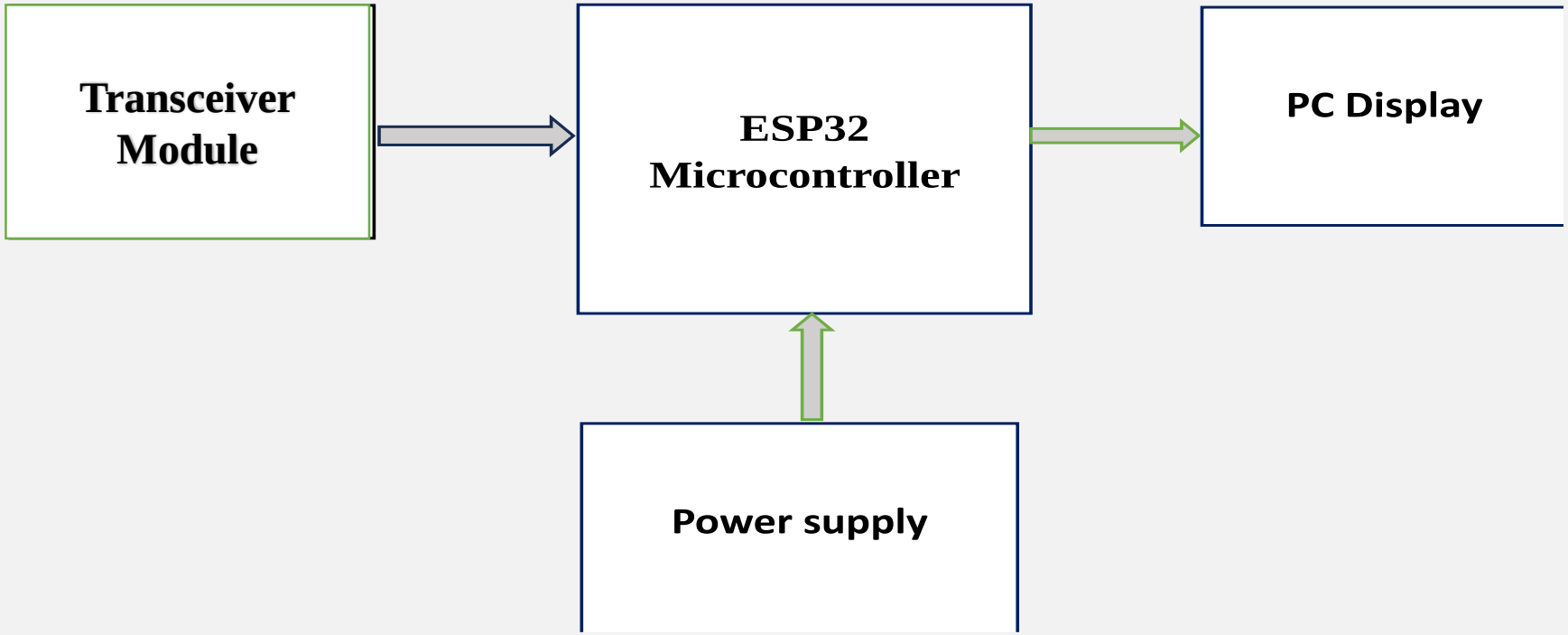

## System Flow-Chart

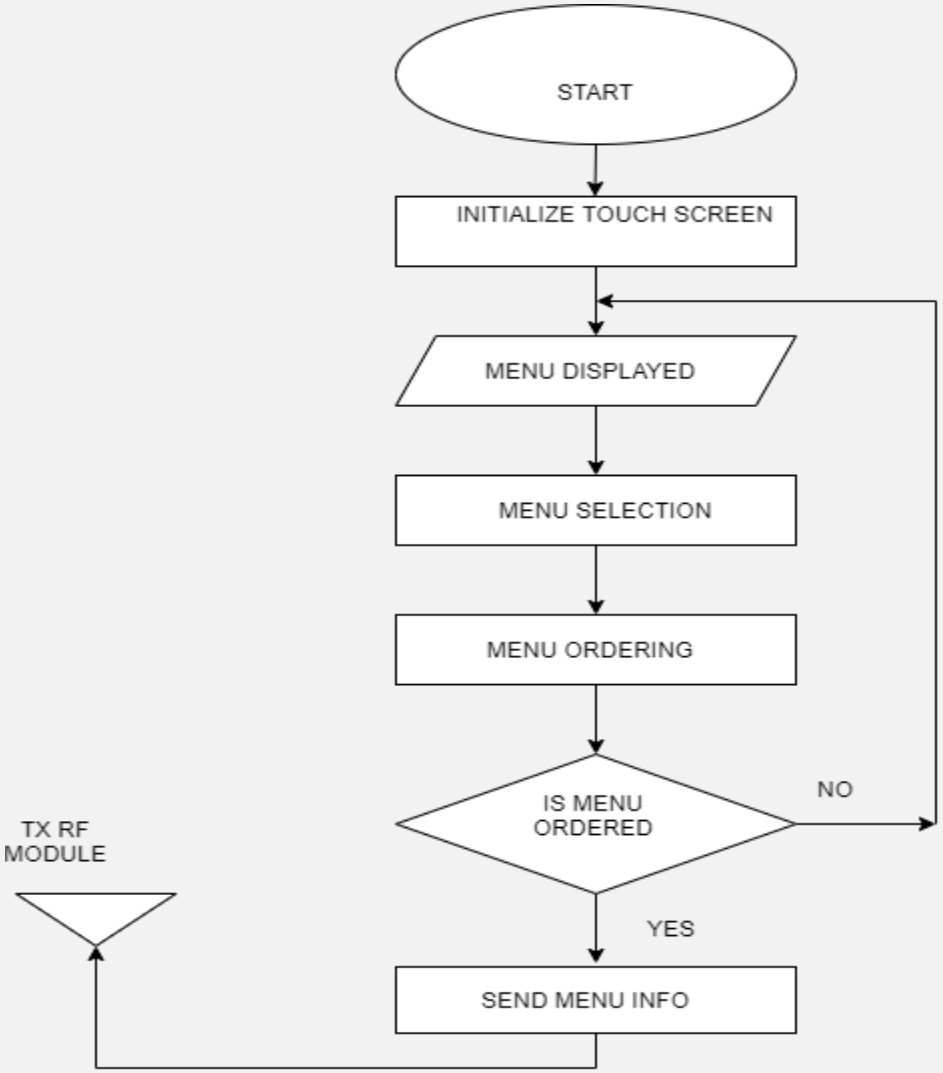


## Flow-chart of transmitting part

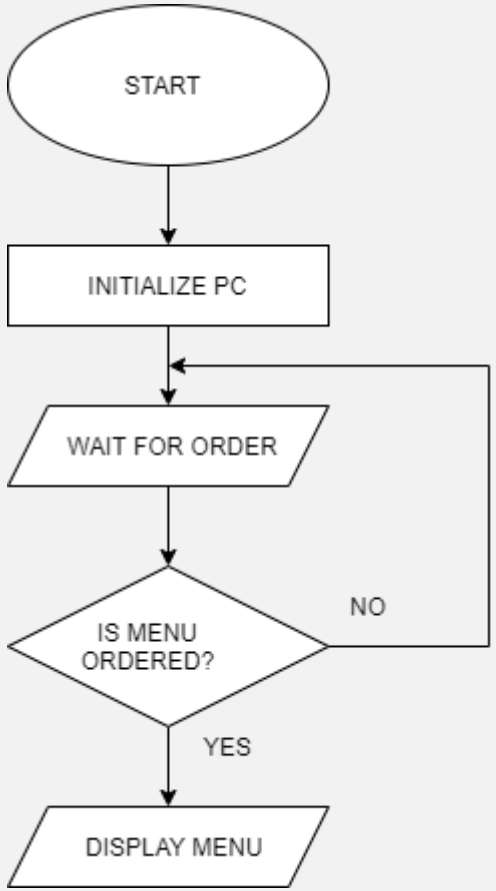

# Results :

DOSA x 1= Rs 60
IDLI x 1= Rs 45
PURI x 1= Rs 60
TEA x 1= Rs 20
TOTAL:Rs 185
ORDER PLACE

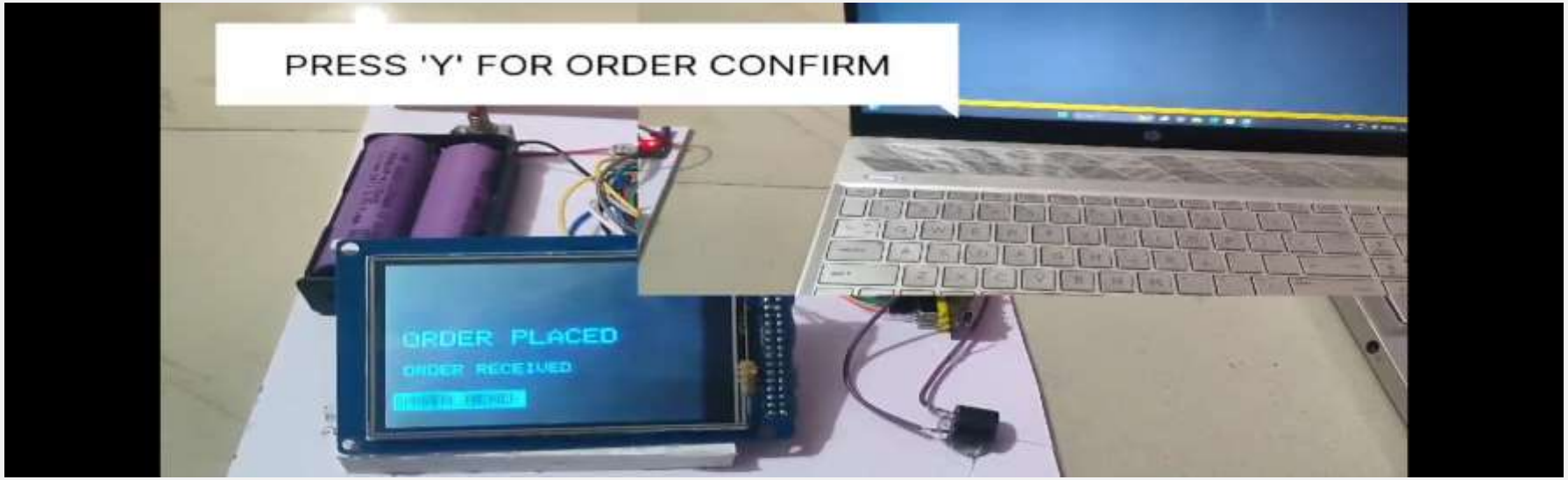
PRESS 'Y' FOR ORDER CONFIRM
ORDER PLACED
ORDER RECEIVED

# Project Outcome :

- The "Wireless Two-Way Restaurant E-Menu Food Ordering System using RF Module" provides a streamlined, efficient ordering process in a restaurant setting. Customers can browse the menu, place orders, and receive real-time status updates at their table without waitstaff assistance.
- This system reduces order errors, speeds up service, and enhances customer satisfaction, ultimately improving restaurant efficiency and table turnover rates.
- The RF communication ensures reliable, low-cost data transmission over short distances.

# Conclusion :

- The Wireless Two-Way Communication E-Menu Food Ordering System signifies a significant advancement in the restaurant sector. By utilizing wireless technology, it boosts operational efficiency, lessens environmental impact, and greatly enhances the dining experience for customers.
- This project serves as a proof-of-concept for a modern and efficient food ordering system. Its potential to revolutionize the food service industry is significant, offering a user-friendly, efficient, and hygienic solution for both customers and restaurant staff.
- This groundbreaking system not only tackles existing challenges within the industry but also paves the way for future innovations, ensuring a competitive advantage in the rapidly changing digital marketplace