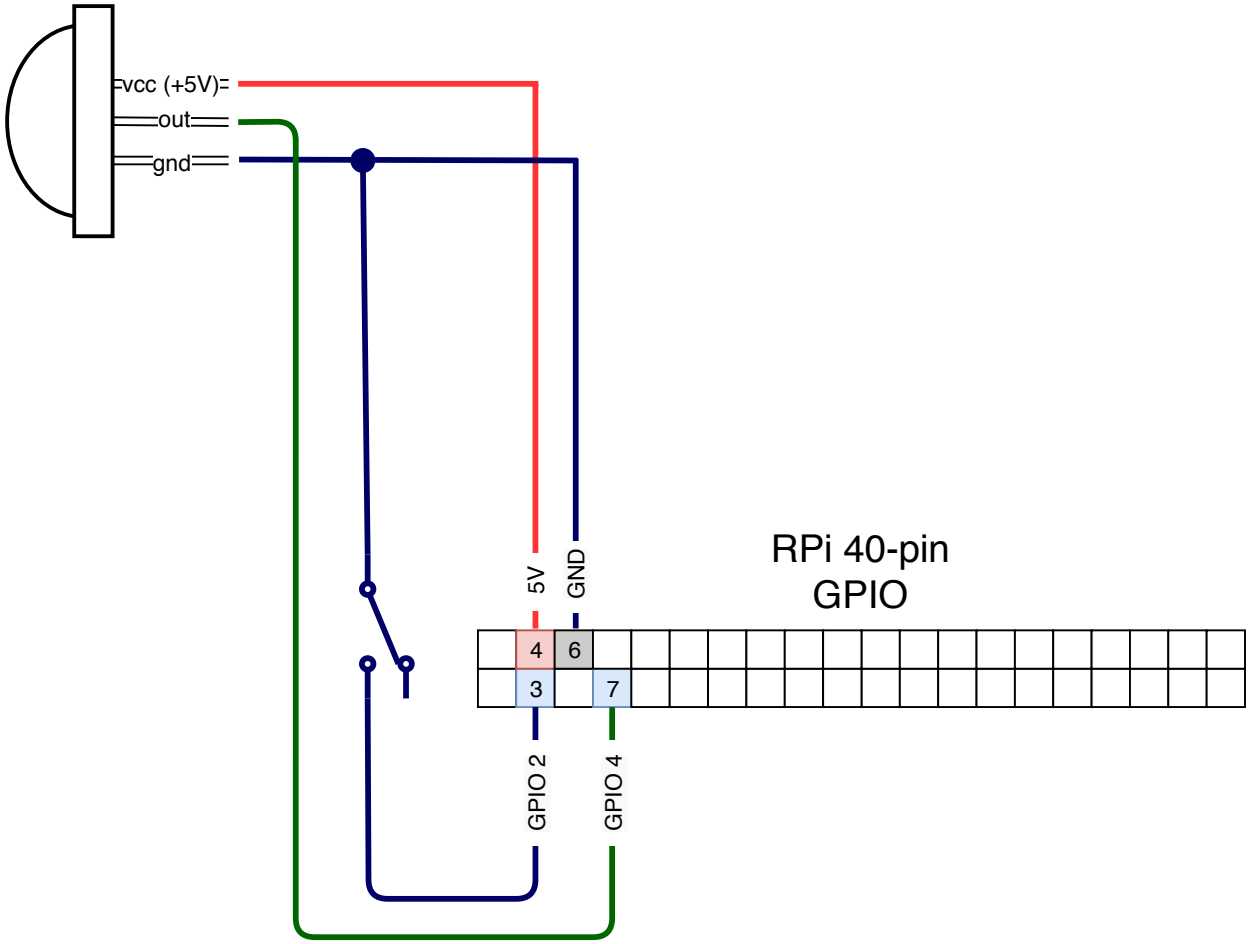

Raspberry Pi 3 Pin Mapping

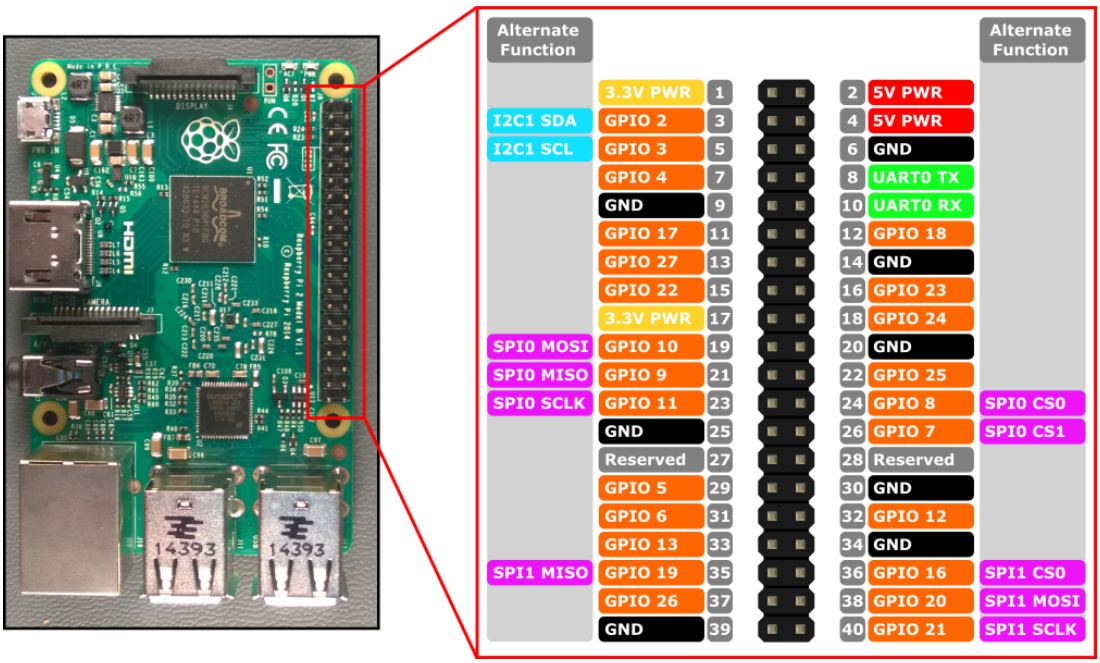

https://docs.microsoft.com/en-us/windows/iot-core/learn-about-hardware/pinmappings/pinmappingsrpi